PRECISION PROGRAMMABLE REFERENCE

Check for Samples: TL431, TL431A, TL431B, TL432, TL432A, TL432B

FEATURES

- **Operation From −40°C to 125°C**
- **Reference Voltage Tolerance at 25°C**
  - **0.5% . . . B Grade**
  - **1%. . . A Grade**
  - **2% . . . Standard Grade**
- **Typical Temperature Drift (TL431B)**
  - **6 mV (C Temp)**
  - **14 mV (I Temp, Q Temp)**
- **Low Output Noise**
- **0.2-Ω Typical Output Impedance**
- **Sink-Current Capability . . . 1 mA to 100 mA**
- **Adjustable Output Voltage . . . Vref to 36 V**

TL431, TL431A, TL431B . . . D (SOIC) PACKAGE
(TOP VIEW)

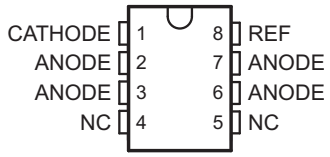

NC − No internal connection

TL431, TL431A, TL431B . . . P (PDIP), PS (SOP),
OR PW (TSSOP) PACKAGE
(TOP VIEW)

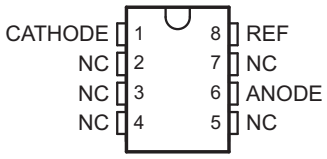

NC − No internal connection

Datasheet.Directory

TL431, TL431A, TL431B . . . PK (SOT-89) PACKAGE
(TOP VIEW)

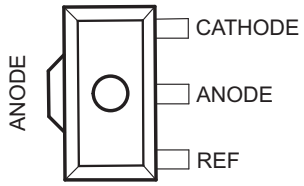

TL432, TL432A, TL432B . . . PK (SOT-89) PACKAGE
(TOP VIEW)

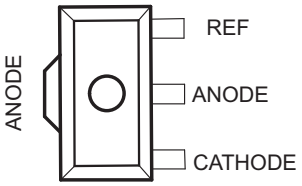

TL431, TL431A, TL431B . . . DBV (SOT-23-5) PACKAGE
(TOP VIEW)

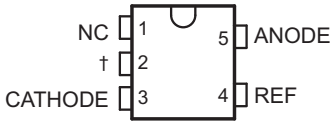

NC − No internal connection
† Pin 2 is attached to Substrate and must be connected to ANODE or left open.

TL432, TL432A, TL432B . . . DBV (SOT-23-5) PACKAGE
(TOP VIEW)

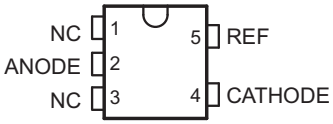

NC − No internal connection

TL431, TL431A, TL431B . . . DBZ (SOT-23-3) PACKAGE
(TOP VIEW)

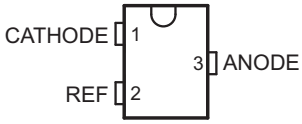

TL432, TL432A, TL432B . . . DBZ (SOT-23-3) PACKAGE
(TOP VIEW)

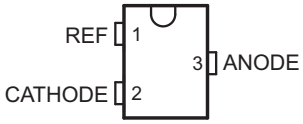

Please be aware that an important notice concerning availability, standard warranty, and use in critical applications of Texas Instruments semiconductor products and disclaimers thereto appears at the end of this data sheet.

PRODUCTION DATA information is current as of publication date. Products conform to specifications per the terms of the Texas Instruments standard warranty. Production processing does not necessarily include testing of all parameters.

Copyright © 2004–2012, Texas Instruments Incorporated

TL431, TL431A, TL431B . . . LP (TO-92/TO-226) PACKAGE
(TOP VIEW)

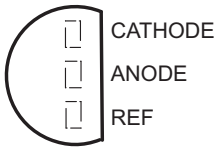

TL431A, TL431B . . . DCK (SC-70) PACKAGE
(TOP VIEW)

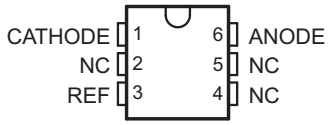

NC − No internal connection

TL431 . . . KTP (PowerFLEX /TO-252) PACKAGE
(TOP VIEW)

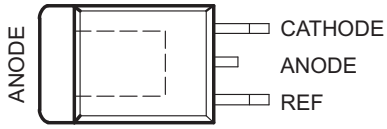

DESCRIPTION/ORDERING INFORMATION

The TL431 and TL432 are three-terminal adjustable shunt regulators, with specified thermal stability over applicable automotive, commercial, and military temperature ranges. The output voltage can be set to any value between Vref (approximately 2.5 V) and 36 V, with two external resistors (see Figure 17). These devices have a typical output impedance of 0.2 Ω. Active output circuitry provides a very sharp turn-on characteristic, making these devices excellent replacements for Zener diodes in many applications, such as onboard regulation, adjustable power supplies, and switching power supplies. The TL432 has exactly the same functionality and electrical specifications as the TL431, but has different pinouts for the DBV, DBZ, and PK packages.

Both the TL431 and TL432 devices are offered in three grades, with initial tolerances (at 25°C) of 0.5%, 1%, and 2%, for the B, A, and standard grade, respectively. In addition, low output drift vs temperature ensures good stability over the entire temperature range.

The TL43xxC devices are characterized for operation from 0°C to 70°C, the TL43xxI devices are characterized for operation from –40°C to 85°C, and the TL43xxQ devices are characterized for operation from –40°C to 125°C.

Copyright © 2004–2012, Texas Instruments Incorporated

V_{ref} TOLERANCE (25°C) = 2%
TL431, TL432 ORDERING INFORMATION(1)

T_A	PACKAGE(2)		ORDERABLE PART NUMBER	TOP-SIDE MARKING(3)
0°C to 70°C	PDIP (P)	Tube of 50	TL431CP	TL431CP
	SOIC (D)	Tube of 75	TL431CD	TL431C
		Reel of 2500	TL431CDR	
	SOP (PS)	Reel of 2000	TL431CPSR	T431
	SOT-23-5 (DBV)	Reel of 3000	TL431CDBVR	T3C_
		Reel of 250	TL431CDBVT	
		Reel of 3000	TL432CDBVR	T4C_
		Reel of 250	TL432CDBVT	
	SOT-23-3 (DBZ)	Reel of 3000	TL431CDBZR	T3C_
		Reel of 250	TL431CDBZT	
		Reel of 3000	TL432CDBZR	T4C_
		Reel of 250	TL432CDBZT	
	SOT-89 (PK)	Reel of 1000	TL431CPK	43
			TL432CPK	2A
	TO-226/TO-92 (LP)	Bulk of 1000, straight lead	TL431CLP	TL431C
		Ammo of 2000, formed lead	TL431CLPM	
		Reel of 2000, formed lead	TL431CLPR	
	TSSOP (PW)	Tube of 150	TL431CPW	T431
		Reel of 2000	TL431CPWR	
-40°C to 85°C	PDIP (P)	Tube of 50	TL431IP	TL431IP
	SOIC (D)	Tube of 75	TL431ID	TL431I
		Reel of 2500	TL431IDR	
	SOT-23-5 (DBV)	Reel of 3000	TL431IDBVR	T3I_
		Reel of 250	TL431IDBVT	
		Reel of 3000	TL432IDBVR	T4I_
		Reel of 250	TL432IDBVT	
	SOT-23-3 (DBZ)	Reel of 3000	TL431IDBZR	T3I_
		Reel of 250	TL431IDBZT	
		Reel of 3000	TL432IDBZR	T4I_
		Reel of 250	TL432IDBZT	
	SOT-89 (PK)	Reel of 1000	TL431IPK	3I
			TL432IPK	2B
	TO-226/TO-92 (LP)	Bulk of 1000, straight lead	TL431ILP	TL431I
		Ammo of 2000, formed lead	TL431ILPM	
		Reel of 2000, formed lead	TL431ILPR	

(1) For the most current package and ordering information, see the Package Option Addendum at the end of this document, or see the TI web site at www.ti.com.
(2) Package drawings, thermal data, and symbolization are available at www.ti.com/packaging.
(3) DBV/DBZ/DCK: The actual top-side marking has one additional character that designates the wafer fab/assembly site.

Copyright © 2004–2012, Texas Instruments Incorporated

V_{ref} TOLERANCE (25°C) = 2%
TL431, TL432 ORDERING INFORMATION(1) (continued)

T_A	PACKAGE(2)		ORDERABLE PART NUMBER	TOP-SIDE MARKING(3)
-40°C to 125°C	SOT-23-5 (DBV)	Reel of 3000	TL431QDBVR	T3Q_
		Reel of 250	TL431QDBVT	
		Reel of 3000	TL432QDBVR	T4Q_
		Reel of 250	TL432QDBVT	
	SOT-23-3 (DBZ)	Reel of 3000	TL431QDBZR	T3Q_
		Reel of 250	TL431QDBZT	
		Reel of 3000	TL432QDBZR	T4Q_
		Reel of 250	TL432QDBZT	
	SOT-89 (PK)	Reel of 1000	TL431QPK	3Q
			TL432QPK	2C
	SC-70 (DCK)	Reel of 1000	TL431QDCKR	T6_
		Reel of 250	TL431QDCKT	

Copyright © 2004–2012, Texas Instruments Incorporated

V_{ref} TOLERANCE (25°C) = 1%
TL431A, TL432A ORDERING INFORMATION(1)

T_A	PACKAGE(2)		ORDERABLE PART NUMBER	TOP-SIDE MARKING(3)
0°C to 70°C	PDIP (P)	Tube of 50	TL431ACP	TL431ACP
	SC-70 (DCK)	Reel of 3000	TL431ACDCKR	T4_
		Reel of 250	TL431ACDCKT	
	SOIC (D)	Tube of 75	TL431ACD	431AC
		Reel of 2500	TL431ACDR	
	SOP (PS)	Reel of 2000	TL431ACPSR	T431A
	SOT-23-5 (DBV)	Reel of 3000	TL431ACDBVR	TAC_
		Reel of 250	TL431ACDBVT	
		Reel of 3000	TL432ACDBVR	T4B_
		Reel of 250	TL432ACDBVT	
	SOT-23-3 (DBZ)	Reel of 3000	TL431ACDBZR	TAC_
		Reel of 250	TL431ACDBZT	
		Reel of 3000	TL432ACDBZR	T4B_
		Reel of 250	TL432ACDBZT	
	SOT-89 (PK)	Reel of 1000	TL431ACPK	4A
			TL432ACPK	2D
	TO-226/TO-92 (LP)	Bulk of 1000, straight lead	TL431ACLP	TL431AC
		Ammo of 2000, formed lead	TL431ACLPM	
		Reel of 2000, formed lead	TL431ACLPR	
		Reel of 2000, formed lead	TL431ACLPRE3	
	TSSOP (PW)	Tube of 150	TL431ACPW	T431A
		Reel of 2000	TL431ACPWR	
-40°C to 85°C	PDIP (P)	Tube of 50	TL431AIP	TL431AIP
	SC-70 (DCK)	Reel of 3000	TL431AIDCKR	T5_
		Reel of 250	TL431AIDCKT	
	SOIC (D)	Tube of 75	TL431AID	431AI
		Reel of 2500	TL431AIDR	
	SOT-23-5 (DBV)	Reel of 3000	TL431AIDBVR	TAI_
		Reel of 250	TL431AIDBVT	
		Reel of 3000	TL432AIDBVR	T4A_
		Reel of 250	TL432AIDBVT	
	SOT-23-3 (DBZ)	Reel of 3000	TL431AIDBZR	TAI_
		Reel of 250	TL431AIDBZT	
		Reel of 3000	TL432AIDBZR	T4A_
		Reel of 250	TL432AIDBZT	
	SOT-89 (PK)	Reel of 1000	TL431AIPK	4B
			TL432AIPK	2E
	TO-226/TO-92 (LP)	Bulk of 1000, straight lead	TL431AILP	TL431AI
		Ammo of 2000, formed lead	TL431AILPM	
		Reel of 2000, formed lead	TL431AILPR	

(1) For the most current package and ordering information, see the Package Option Addendum at the end of this document, or see the TI web site at www.ti.com.
(2) Package drawings, thermal data, and symbolization are available at www.ti.com/packaging.
(3) DBV/DBZ/DCK: The actual top-side marking has one additional character that designates the wafer fab/assembly site.

Copyright © 2004–2012, Texas Instruments Incorporated

V_{ref} TOLERANCE (25°C) = 1%
TL431A, TL432A ORDERING INFORMATION(1) (continued)

T_A	PACKAGE(2)		ORDERABLE PART NUMBER	TOP-SIDE MARKING(3)
-40°C to 125°C	SOT-23-5 (DBV)	Reel of 3000	TL431AQDBVR	TAQ_
		Reel of 250	TL431AQDBVT	
		Reel of 3000	TL432AQDBVR	T4D_
		Reel of 250	TL432AQDBVT	
	SOT-23-3 (DBZ)	Reel of 3000	TL431AQDBZR	TAQ_
		Reel of 250	TL431AQDBZT	
		Reel of 3000	TL432AQDBZR	T4D_
		Reel of 250	TL432AQDBZT	
	SOT-89 (PK)	Reel of 1000	TL431AQPK	4D
			TL432AQPK	2F
	SC-70 (PK)	Reel of 1000	TL431AQDCKR	T7_
		Reel of 250	TL431AQDCKT	

Copyright © 2004–2012, Texas Instruments Incorporated

V_{ref} TOLERANCE (25°C) = 0.5%
TL431B, TL432B ORDERING INFORMATION(1)

T_A	PACKAGE(2)		ORDERABLE PART NUMBER	TOP-SIDE MARKING(3)
0°C to 70°C	PDIP (P)	Tube of 50	TL431BCP	TL431BCP
	SC-70 (DCK)	Reel of 3000	TL431BCDCKR	T2_
		Reel of 250	TL431BCDCKT	
	SOIC (D)	Tube of 75	TL431BCD	T431B
		Reel of 2500	TL431BCDR	
	SOP (PS)	Reel of 2000	TL431BCPSR	TL431B
	SOT-23-5 (DBV)	Reel of 3000	TL431BCDBVR	T3G_
		Reel of 250	TL431BCDBVT	
		Reel of 3000	TL432BCDBVR	TBC_
		Reel of 250	TL432BCDBVT	
	SOT-23-3 (DBZ)	Reel of 3000	TL431BCDBZR	T3G_
		Reel of 250	TL431BCDBZT	
		Reel of 3000	TL432BCDBZR	TBC_
		Reel of 250	TL432BCDBZT	
	SOT-89 (PK)	Reel of 1000	TL431BCPK	4C
			TL432BCPK	2G
	TO-226/TO-92 (LP)	Bulk of 1000, straight lead	TL431BCLP	TL431B
		Ammo of 2000, formed lead	TL431BCLPM	
		Reel of 2000, formed lead	TL431BCLPR	
	TSSOP (PW)	Tube of 150	TL431BCPW	T431B
		Reel of 2000	TL431BCPWR	
-40°C to 85°C	PDIP (P)	Tube of 50	TL431BIP	TL431BIP
	SC-70 (DCK)	Reel of 3000	TL431BIDCKR	T3_
		Reel of 250	TL431BIDCKT	
	SOIC (D)	Tube of 75	TL431BID	Z431B
		Reel of 2500	TL431BIDR	
	SOT-23-5 (DBV)	Reel of 3000	TL431BIDBVR	T3F_
		Reel of 250	TL431BIDBVT	
		Reel of 3000	TL432BIDBVR	T4F_
		Reel of 250	TL432BIDBVT	
	SOT-23-3 (DBZ)	Reel of 3000	TL431BIDBZR	T3F_
		Reel of 250	TL431BIDBZT	
		Reel of 3000	TL432BIDBZR	T4F_
		Reel of 250	TL432BIDBZT	
	SOT-89 (PK)	Reel of 1000	TL431BIPK	4I
			TL432BIPK	2H
	TO-226/TO-92 (LP)	Bulk of 1000, straight lead	TL431BILP	Z431B
		Ammo of 2000, formed lead	TL431BILPM	
		Reel of 2000, formed lead	TL431BILPR	

(1) For the most current package and ordering information, see the Package Option Addendum at the end of this document, or see the TI web site at www.ti.com.
(2) Package drawings, thermal data, and symbolization are available at www.ti.com/packaging.
(3) DBV/DBZ/DCK: The actual top-side marking has one additional character that designates the wafer fab/assembly site.

Copyright © 2004–2012, Texas Instruments Incorporated

V_{ref} TOLERANCE (25°C) = 0.5%
TL431B, TL432B ORDERING INFORMATION(1) (continued)

T_A	PACKAGE(2)		ORDERABLE PART NUMBER	TOP-SIDE MARKING(3)
-40°C to 125°C	SOIC (D)	Tube of 75	TL431BQD	T431BQ
		Reel of 2500	TL431BQDR	
	SOT-23-5 (DBV)	Reel of 3000	TL431BQDBVR	T3H_
		Reel of 250	TL431BQDBVT	
		Reel of 3000	TL432BQDBVR	T4H_
		Reel of 250	TL432BQDBVT	
	SOT-23-3 (DBZ)	Reel of 3000	TL431BQDBZR	T3H_
		Reel of 250	TL431BQDBZT	
		Reel of 3000	TL432BQDBZR	T4H_
		Reel of 250	TL432BQDBZT	
	SOT-89 (PK)	Reel of 1000	TL431BQPK	3H
			TL432BQPK	2J
	TO-226/TO-92 (LP)	Bulk of 1000, straight lead	TL431BQLP	T431BQ
		Ammo of 2000, formed lead	TL431BQLPM	
		Reel of 2000, formed lead	TL431BQLPR	
	SC-70 (DCK)	Reel of 1000	TL431BQDCKR	T8_
		Reel of 250	TL431BQDCKT	

Copyright © 2004–2012, Texas Instruments Incorporated

Figure 1. SYMBOL

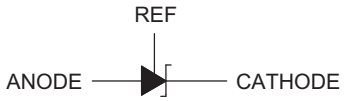

Figure 2. FUNCTIONAL BLOCK DIAGRAM

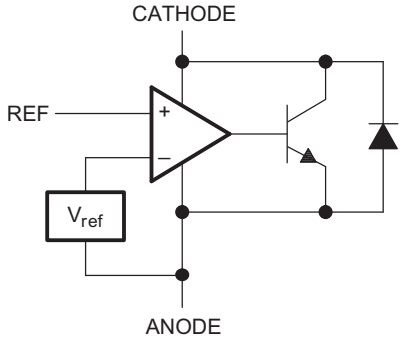

Figure 3. EQUIVALENT SCHEMATIC

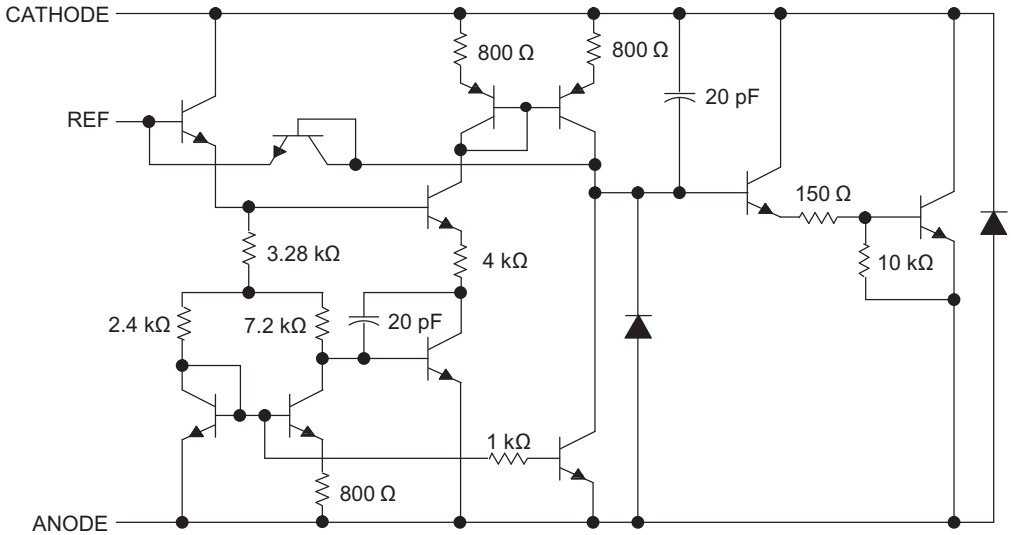

NOTE: All component values are nominal.

ABSOLUTE MAXIMUM RATINGS(1)

over operating free-air temperature range (unless otherwise noted)

		MIN	MAX	UNIT
V_{KA}	Cathode voltage(2)		37	V
I_{KA}	Continuous cathode current range	–100	150	mA
$I_{I(ref)}$	Reference input current range	–0.05	10	mA
T_J	Operating virtual junction temperature		150	°C
T_{stg}	Storage temperature range	–65	150	°C

(1) Stresses beyond those listed under "absolute maximum ratings" may cause permanent damage to the device. These are stress ratings only, and functional operation of the device at these or any other conditions beyond those indicated under "recommended operating conditions" is not implied. Exposure to absolute-maximum-rated conditions for extended periods may affect device reliability.
(2) All voltage values are with respect to ANODE, unless otherwise noted.

PACKAGE THERMAL DATA(1)

PACKAGE	BOARD	θ_{JC}	θ_{JA}
PDIP (P)	High K, JESD 51-7	57°C/W	85°C/W
SC-70 (DCK)	High K, JESD 51-7	259°C/W	87°C/W
SOIC (D)	High K, JESD 51-7	39°C/W	97°C/W
SOP (PS)	High K, JESD 51-7	46°C/W	95°C/W
SOT-89 (PK)	High K, JESD 51-7	9°C/W	52°C/W
SOT-23-5 (DBV)	High K, JESD 51-7	131°C/W	206°C/W
SOT-23-3 (DBZ)	High K, JESD 51-7	76°C/W	206°C/W
TO-92 (LP)	High K, JESD 51-7	55°C/W	140°C/W
TSSOP (PW)	High K, JESD 51-7	65°C/W	149°C/W

(1) Maximum power dissipation is a function of $T_{J(max)}$, θ_{JA}, and T_A. The maximum allowable power dissipation at any allowable ambient temperature is $P_D = (T_{J(max)} – T_A)/\theta_{JA}$. Operating at the absolute maximum T_J of 150°C can affect reliability.

RECOMMENDED OPERATING CONDITIONS

			MIN	MAX	UNIT
V_{KA}	Cathode voltage		V_{ref}	36	V
I_{KA}	Cathode current		1	100	mA
T_A	Operating free-air temperature	TL43xxC	0	70	°C
		TL43xxI	–40	85	
		TL43xxQ	–40	125	

Copyright © 2004–2012, Texas Instruments Incorporated

ELECTRICAL CHARACTERISTICS

over recommended operating conditions, T_A = 25°C (unless otherwise noted)

PARAMETER		TEST CIRCUIT	TEST CONDITIONS		TL431C, TL432C			UNIT
					MIN	TYP	MAX	
V_{ref}	Reference voltage	Figure 4	V_{KA} = V_{ref}, I_{KA} = 10 mA		2440	2495	2550	mV
$V_{I(dev)}$	Deviation of reference input voltage over full temperature range(1)	Figure 4	V_{KA} = V_{ref}, I_{KA} = 10 mA,	SOT23-3 and TL432 devices		6	16	mV
				All other devices		4	25	
ΔV_{ref} / ΔV_{KA}	Ratio of change in reference voltage to the change in cathode voltage	Figure 5	I_{KA} = 10 mA	ΔV_{KA} = 10 V − V_{ref}		-1.4	-2.7	mV/V
				ΔV_{KA} = 36 V − 10 V		-1	-2	
I_{ref}	Reference input current	Figure 5	I_{KA} = 10 mA, R1 = 10 kΩ, R2 = ∞			2	4	µA
$I_{I(dev)}$	Deviation of reference input current over full temperature range(1)	Figure 5	I_{KA} = 10 mA, R1 = 10 kΩ, R2 = ∞			0.4	1.2	µA
I_{min}	Minimum cathode current for regulation	Figure 4	V_{KA} = V_{ref}			0.4	1	mA
I_{off}	Off-state cathode current	Figure 6	V_{KA} = 36 V, V_{ref} = 0			0.1	1	µA
$\|z_{KA}\|$	Dynamic impedance(2)	Figure 4	V_{KA} = V_{ref}, f ≤ 1 kHz, I_{KA} = 1 mA to 100 mA			0.2	0.5	Ω

(1) The deviation parameters $V_{ref(dev)}$ and $I_{ref(dev)}$ are defined as the differences between the maximum and minimum values obtained over the rated temperature range. The average full-range temperature coefficient of the reference input voltage α_{Vref} is defined as:

$$\left|\alpha_{Vref}\right| \left(\frac{ppm}{°C}\right) = \frac{\left(\frac{V_{I(dev)}}{V_{ref\ at\ 25°C}}\right) \times 10^6}{\Delta T_A}$$

where:

ΔT_A is the rated operating temperature range of the device.

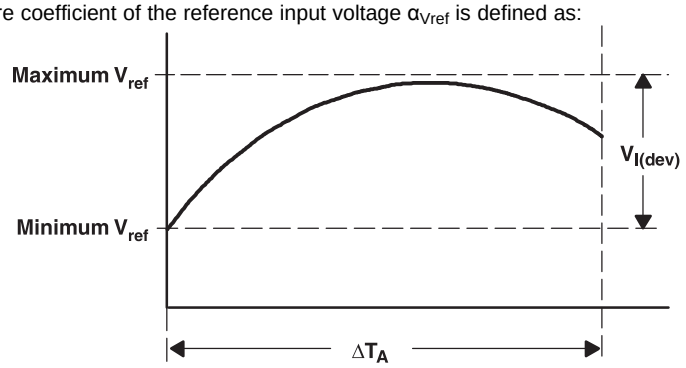

α_{Vref} is positive or negative, depending on whether minimum V_{ref} or maximum V_{ref}, respectively, occurs at the lower temperature.

(2) The dynamic impedance is defined as: $|z_{KA}| = \frac{\Delta V_{KA}}{\Delta I_{KA}}$

When the device is operating with two external resistors (see Figure 5), the total dynamic impedance of the circuit is given by: $|z'| = \frac{\Delta V}{\Delta I}$ which is approximately equal to $|z_{KA}|\left(1 + \frac{R1}{R2}\right)$.

Copyright © 2004–2012, Texas Instruments Incorporated

ELECTRICAL CHARACTERISTICS

over recommended operating conditions, T_A = 25°C (unless otherwise noted)

PARAMETER		TEST CIRCUIT	TEST CONDITIONS		TL431I, TL432I			UNIT
					MIN	TYP	MAX	
V_{ref}	Reference voltage	Figure 4	V_{KA} = V_{ref}, I_{KA} = 10 mA		2440	2495	2550	mV
$V_{I(dev)}$	Deviation of reference input voltage over full temperature range(1)	Figure 4	V_{KA} = V_{ref}, I_{KA} = 10 mA	SOT23-3 and TL432 devices		14	34	mV
				All other devices		5	50	
ΔV_{ref} / ΔV_{KA}	Ratio of change in reference voltage to the change in cathode voltage	Figure 5	I_{KA} = 10 mA	ΔV_{KA} = 10 V − V_{ref}		-1.4	-2.7	mV/V
				ΔV_{KA} = 36 V − 10 V		-1	-2	
I_{ref}	Reference input current	Figure 5	I_{KA} = 10 mA, R1 = 10 kΩ, R2 = ∞			2	4	µA
$I_{I(dev)}$	Deviation of reference input current over full temperature range(1)	Figure 5	I_{KA} = 10 mA, R1 = 10 kΩ, R2 = ∞			0.8	2.5	µA
I_{min}	Minimum cathode current for regulation	Figure 4	V_{KA} = V_{ref}			0.4	1	mA
I_{off}	Off-state cathode current	Figure 6	V_{KA} = 36 V, V_{ref} = 0			0.1	1	µA
$\|z_{KA}\|$	Dynamic impedance(2)	Figure 4	V_{KA} = V_{ref}, f ≤ 1 kHz, I_{KA} = 1 mA to 100 mA			0.2	0.5	Ω

(1) The deviation parameters $V_{ref(dev)}$ and $I_{ref(dev)}$ are defined as the differences between the maximum and minimum values obtained over the rated temperature range. The average full-range temperature coefficient of the reference input voltage α_{Vref} is defined as:

$$\left|\alpha_{vref}\right| \left(\frac{ppm}{°C}\right) = \frac{\left(\frac{V_{I(dev)}}{V_{ref\ at\ 25°C}}\right) \times 10^6}{\Delta T_A}$$

where:
ΔT_A is the rated operating temperature range of the device.

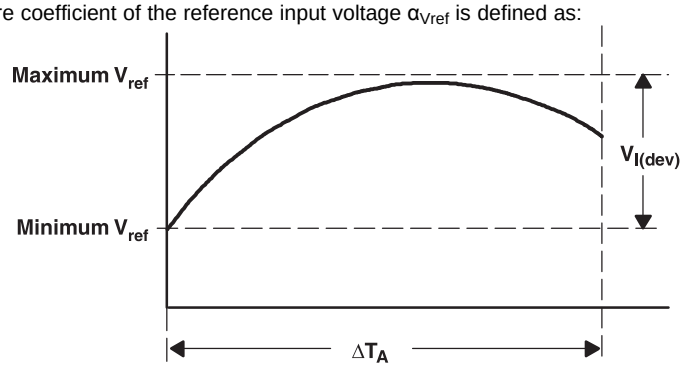

α_{Vref} is positive or negative, depending on whether minimum V_{ref} or maximum V_{ref}, respectively, occurs at the lower temperature.

(2) The dynamic impedance is defined as: $|z_{KA}| = \frac{\Delta V_{KA}}{\Delta I_{KA}}$

When the device is operating with two external resistors (see Figure 5), the total dynamic impedance of the circuit is given by: $|z'| = \frac{\Delta V}{\Delta I}$ which is approximately equal to $|z_{KA}|\left(1 + \frac{R1}{R2}\right)$.

Copyright © 2004–2012, Texas Instruments Incorporated

ELECTRICAL CHARACTERISTICS

over recommended operating conditions, T_A = 25°C (unless otherwise noted)

PARAMETER		TEST CIRCUIT	TEST CONDITIONS		TL431Q, TL432Q			UNIT
					MIN	TYP	MAX	
V_{ref}	Reference voltage	Figure 4	V_{KA} = V_{ref}, I_{KA} = 10 mA		2440	2495	2550	mV
$V_{I(dev)}$	Deviation of reference input voltage over full temperature range(1)	Figure 4	V_{KA} = V_{ref}, I_{KA} = 10 mA			14	34	mV
ΔV_{ref} / ΔV_{KA}	Ratio of change in reference voltage to the change in cathode voltage	Figure 5	I_{KA} = 10 mA	ΔV_{KA} = 10 V − V_{ref}		-1.4	-2.7	mV/V
				ΔV_{KA} = 36 V − 10 V		-1	-2	
I_{ref}	Reference input current	Figure 5	I_{KA} = 10 mA, R1 = 10 kΩ, R2 = ∞			2	4	µA
$I_{I(dev)}$	Deviation of reference input current over full temperature range(1)	Figure 5	I_{KA} = 10 mA, R1 = 10 kΩ, R2 = ∞			0.8	2.5	µA
I_{min}	Minimum cathode current for regulation	Figure 4	V_{KA} = V_{ref}			0.4	1	mA
I_{off}	Off-state cathode current	Figure 6	V_{KA} = 36 V, V_{ref} = 0			0.1	1	µA
$\|z_{KA}\|$	Dynamic impedance(2)	Figure 4	V_{KA} = V_{ref}, f ≤ 1 kHz, I_{KA} = 1 mA to 100 mA			0.2	0.5	Ω

(1) The deviation parameters $V_{ref(dev)}$ and $I_{ref(dev)}$ are defined as the differences between the maximum and minimum values obtained over the rated temperature range. The average full-range temperature coefficient of the reference input voltage α_{Vref} is defined as:

$$\left|\alpha_{vref}\right| \left(\frac{ppm}{^\circ C}\right) = \frac{\left(\frac{V_{I(dev)}}{V_{ref\ at\ 25^\circ C}}\right) \times 10^6}{\Delta T_A}$$

where:

ΔT_A is the rated operating temperature range of the device.

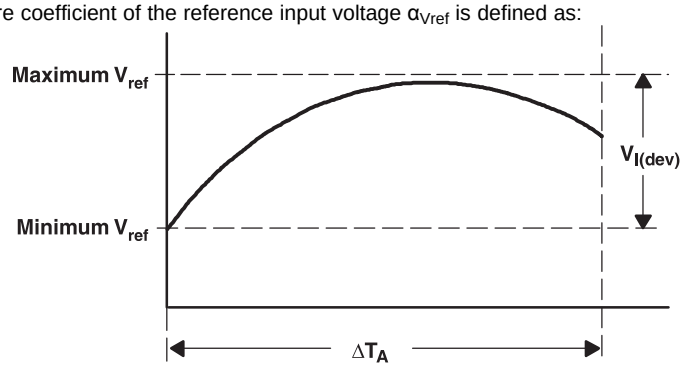

α_{Vref} is positive or negative, depending on whether minimum V_{ref} or maximum V_{ref}, respectively, occurs at the lower temperature.

(2) The dynamic impedance is defined as: $|z_{KA}| = \frac{\Delta V_{KA}}{\Delta I_{KA}}$

When the device is operating with two external resistors (see Figure 5), the total dynamic impedance of the circuit is given by: $|z'| = \frac{\Delta V}{\Delta I}$

which is approximately equal to $|z_{KA}|\left(1 + \frac{R1}{R2}\right)$.

ELECTRICAL CHARACTERISTICS

over recommended operating conditions, T_A = 25°C (unless otherwise noted)

PARAMETER		TEST CIRCUIT	TEST CONDITIONS		TL431AC, TL432AC			UNIT
					MIN	TYP	MAX	
V_{ref}	Reference voltage	Figure 4	V_{KA} = V_{ref}, I_{KA} = 10 mA		2470	2495	2520	mV
$V_{I(dev)}$	Deviation of reference input voltage over full temperature range(1)	Figure 4	V_{KA} = V_{ref}, I_{KA} = 10 mA	SOT23-3 and TL432 devices		6	16	mV
				All other devices		4	25	
ΔV_{ref} / ΔV_{KA}	Ratio of change in reference voltage to the change in cathode voltage	Figure 5	I_{KA} = 10 mA	ΔV_{KA} = 10 V − V_{ref}		-1.4	-2.7	mV/V
				ΔV_{KA} = 36 V − 10 V		-1	-2	
I_{ref}	Reference input current	Figure 5	I_{KA} = 10 mA, R1 = 10 kΩ, R2 = ∞			2	4	µA
$I_{I(dev)}$	Deviation of reference input current over full temperature range(1)	Figure 5	I_{KA} = 10 mA, R1 = 10 kΩ, R2 = ∞			0.8	1.2	µA
I_{min}	Minimum cathode current for regulation	Figure 4	V_{KA} = V_{ref}			0.4	0.6	mA
I_{off}	Off-state cathode current	Figure 6	V_{KA} = 36 V, V_{ref} = 0			0.1	0.5	µA
$\|z_{KA}\|$	Dynamic impedance(2)	Figure 4	V_{KA} = V_{ref}, f ≤ 1 kHz, I_{KA} = 1 mA to 100 mA			0.2	0.5	Ω

(1) The deviation parameters $V_{ref(dev)}$ and $I_{ref(dev)}$ are defined as the differences between the maximum and minimum values obtained over the rated temperature range. The average full-range temperature coefficient of the reference input voltage α_{Vref} is defined as:

$$\left|\alpha_{vref}\right| \left(\frac{ppm}{°C}\right) = \frac{\left(\frac{V_{I(dev)}}{V_{ref\ at\ 25°C}}\right) \times 10^6}{\Delta T_A}$$

where:
ΔT_A is the rated operating temperature range of the device.

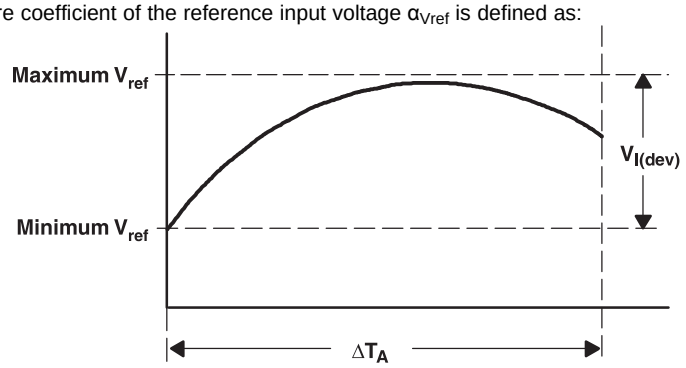

α_{Vref} is positive or negative, depending on whether minimum V_{ref} or maximum V_{ref}, respectively, occurs at the lower temperature.

(2) The dynamic impedance is defined as: $|z_{KA}| = \frac{\Delta V_{KA}}{\Delta I_{KA}}$

When the device is operating with two external resistors (see Figure 5), the total dynamic impedance of the circuit is given by: $|z'| = \frac{\Delta V}{\Delta I}$ which is approximately equal to $|z_{KA}|\left(1 + \frac{R1}{R2}\right)$.

Copyright © 2004–2012, Texas Instruments Incorporated

ELECTRICAL CHARACTERISTICS

over recommended operating conditions, T_A = 25°C (unless otherwise noted)

PARAMETER		TEST CIRCUIT	TEST CONDITIONS		TL431AI, TL432AI			UNIT
					MIN	TYP	MAX	
V_{ref}	Reference voltage	Figure 4	V_{KA} = V_{ref}, I_{KA} = 10 mA		2470	2495	2520	mV
$V_{I(dev)}$	Deviation of reference input voltage over full temperature range(1)	Figure 4	V_{KA} = V_{ref}, I_{KA} = 10 mA	SOT23-3 and TL432 devices		14	34	mV
				All other devices		5	50	
ΔV_{ref} / ΔV_{KA}	Ratio of change in reference voltage to the change in cathode voltage	Figure 5	I_{KA} = 10 mA	ΔV_{KA} = 10 V − V_{ref}		-1.4	-2.7	mV/V
				ΔV_{KA} = 36 V − 10 V		-1	-2	
I_{ref}	Reference input current	Figure 5	I_{KA} = 10 mA, R1 = 10 kΩ, R2 = ∞			2	4	µA
$I_{I(dev)}$	Deviation of reference input current over full temperature range(1)	Figure 5	I_{KA} = 10 mA, R1 = 10 kΩ, R2 = ∞			0.8	2.5	µA
I_{min}	Minimum cathode current for regulation	Figure 4	V_{KA} = V_{ref}			0.4	0.7	mA
I_{off}	Off-state cathode current	Figure 6	V_{KA} = 36 V, V_{ref} = 0			0.1	0.5	µA
$\|z_{KA}\|$	Dynamic impedance(2)	Figure 4	V_{KA} = V_{ref}, f ≤ 1 kHz, I_{KA} = 1 mA to 100 mA			0.2	0.5	Ω

(1) The deviation parameters $V_{ref(dev)}$ and $I_{ref(dev)}$ are defined as the differences between the maximum and minimum values obtained over the rated temperature range. The average full-range temperature coefficient of the reference input voltage α_{Vref} is defined as:

$$\left|\alpha_{Vref}\right| \left(\frac{ppm}{°C}\right) = \frac{\left(\frac{V_{I(dev)}}{V_{ref\ at\ 25°C}}\right) \times 10^6}{\Delta T_A}$$

where:

ΔT_A is the rated operating temperature range of the device.

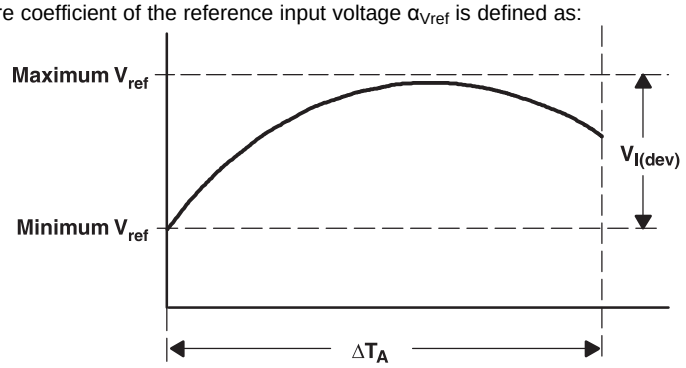

α_{Vref} is positive or negative, depending on whether minimum V_{ref} or maximum V_{ref}, respectively, occurs at the lower temperature.

(2) The dynamic impedance is defined as: $|z_{KA}| = \frac{\Delta V_{KA}}{\Delta I_{KA}}$

When the device is operating with two external resistors (see Figure 5), the total dynamic impedance of the circuit is given by: $|z'| = \frac{\Delta V}{\Delta I}$ which is approximately equal to $|z_{KA}|\left(1 + \frac{R1}{R2}\right)$.

ELECTRICAL CHARACTERISTICS

over recommended operating conditions, T_A = 25°C (unless otherwise noted)

PARAMETER		TEST CIRCUIT	TEST CONDITIONS		TL431AQ, TL432AQ			UNIT
					MIN	TYP	MAX	
V_{ref}	Reference voltage	Figure 4	V_{KA} = V_{ref}, I_{KA} = 10 mA		2470	2495	2520	mV
$V_{I(dev)}$	Deviation of reference input voltage over full temperature range(1)	Figure 4	V_{KA} = V_{ref}, I_{KA} = 10 mA			14	34	mV
ΔV_{ref} / ΔV_{KA}	Ratio of change in reference voltage to the change in cathode voltage	Figure 5	I_{KA} = 10 mA	ΔV_{KA} = 10 V − V_{ref}		-1.4	-2.7	mV/V
				ΔV_{KA} = 36 V − 10 V		-1	-2	
I_{ref}	Reference input current	Figure 5	I_{KA} = 10 mA, R1 = 10 kΩ, R2 = ∞			2	4	µA
$I_{I(dev)}$	Deviation of reference input current over full temperature range(1)	Figure 5	I_{KA} = 10 mA, R1 = 10 kΩ, R2 = ∞			0.8	2.5	µA
I_{min}	Minimum cathode current for regulation	Figure 4	V_{KA} = V_{ref}			0.4	0.7	mA
I_{off}	Off-state cathode current	Figure 6	V_{KA} = 36 V, V_{ref} = 0			0.1	0.5	µA
$\lvert z_{KA} \rvert$	Dynamic impedance(2)	Figure 4	V_{KA} = V_{ref}, f ≤ 1 kHz, I_{KA} = 1 mA to 100 mA			0.2	0.5	Ω

(1) The deviation parameters $V_{ref(dev)}$ and $I_{ref(dev)}$ are defined as the differences between the maximum and minimum values obtained over the rated temperature range. The average full-range temperature coefficient of the reference input voltage α_{Vref} is defined as:

$$\left|\alpha_{vref}\right| \left(\frac{ppm}{^\circ C}\right) = \frac{\left(\frac{V_{I(dev)}}{V_{ref\ at\ 25^\circ C}}\right) \times 10^6}{\Delta T_A}$$

where:

ΔT_A is the rated operating temperature range of the device.

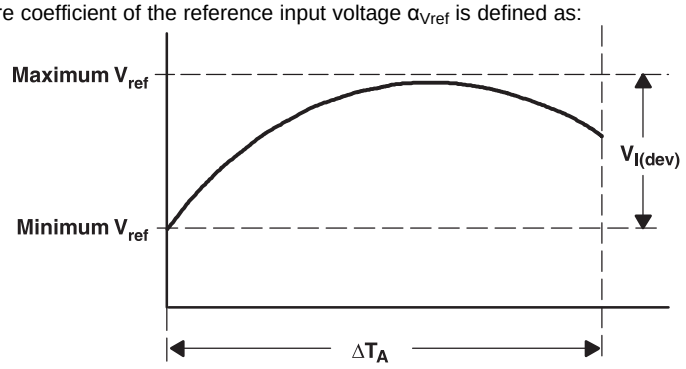

α_{Vref} is positive or negative, depending on whether minimum V_{ref} or maximum V_{ref}, respectively, occurs at the lower temperature.

(2) The dynamic impedance is defined as: $\lvert z_{KA} \rvert = \frac{\Delta V_{KA}}{\Delta I_{KA}}$

When the device is operating with two external resistors (see Figure 5), the total dynamic impedance of the circuit is given by: $\lvert z' \rvert = \frac{\Delta V}{\Delta I}$

which is approximately equal to $\lvert z_{KA} \rvert \left(1 + \frac{R1}{R2}\right)$.

Copyright © 2004–2012, Texas Instruments Incorporated

ELECTRICAL CHARACTERISTICS

over recommended operating conditions, T_A = 25°C (unless otherwise noted)

PARAMETER		TEST CIRCUIT	TEST CONDITIONS		TL431BC, TL432BC			UNIT
					MIN	TYP	MAX	
V_{ref}	Reference voltage	Figure 4	V_{KA} = V_{ref}, I_{KA} = 10 mA		2483	2495	2507	mV
$V_{I(dev)}$	Deviation of reference input voltage over full temperature range(1)	Figure 4	V_{KA} = V_{ref}, I_{KA} = 10 mA			6	16	mV
ΔV_{ref} / ΔV_{KA}	Ratio of change in reference voltage to the change in cathode voltage	Figure 5	I_{KA} = 10 mA	ΔV_{KA} = 10 V − V_{ref}		-1.4	-2.7	mV/V
				ΔV_{KA} = 36 V − 10 V		-1	-2	
I_{ref}	Reference input current	Figure 5	I_{KA} = 10 mA, R1 = 10 kΩ, R2 = ∞			2	4	µA
$I_{I(dev)}$	Deviation of reference input current over full temperature range(1)	Figure 5	I_{KA} = 10 mA, R1 = 10 kΩ, R2 = ∞			0.8	1.2	µA
I_{min}	Minimum cathode current for regulation	Figure 4	V_{KA} = V_{ref}			0.4	0.6	mA
I_{off}	Off-state cathode current	Figure 6	V_{KA} = 36 V, V_{ref} = 0			0.1	0.5	µA
$\|z_{KA}\|$	Dynamic impedance(2)	Figure 4	V_{KA} = V_{ref}, f ≤ 1 kHz, I_{KA} = 1 mA to 100 mA			0.2	0.5	Ω

(1) The deviation parameters $V_{ref(dev)}$ and $I_{ref(dev)}$ are defined as the differences between the maximum and minimum values obtained over the rated temperature range. The average full-range temperature coefficient of the reference input voltage α_{Vref} is defined as:

$$\left|\alpha_{vref}\right| \left(\frac{ppm}{^\circ C}\right) = \frac{\left(\frac{V_{I(dev)}}{V_{ref\ at\ 25^\circ C}}\right) \times 10^6}{\Delta T_A}$$

where:

ΔT_A is the rated operating temperature range of the device.

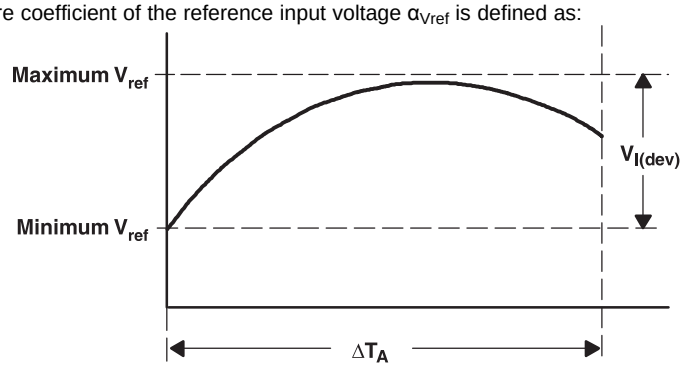

α_{Vref} is positive or negative, depending on whether minimum V_{ref} or maximum V_{ref}, respectively, occurs at the lower temperature.

(2) The dynamic impedance is defined as: $|z_{KA}| = \frac{\Delta V_{KA}}{\Delta I_{KA}}$

When the device is operating with two external resistors (see Figure 5), the total dynamic impedance of the circuit is given by: $|z'| = \frac{\Delta V}{\Delta I}$

which is approximately equal to $|z_{KA}|\left(1 + \frac{R1}{R2}\right)$.

ELECTRICAL CHARACTERISTICS

over recommended operating conditions, T_A = 25°C (unless otherwise noted)

PARAMETER		TEST CIRCUIT	TEST CONDITIONS		TL431BI, TL432BI			UNIT
					MIN	TYP	MAX	
V_{ref}	Reference voltage	Figure 4	V_{KA} = V_{ref}, I_{KA} = 10 mA		2483	2495	2507	mV
$V_{I(dev)}$	Deviation of reference input voltage over full temperature range(1)	Figure 4	V_{KA} = V_{ref}, I_{KA} = 10 mA			14	34	mV
ΔV_{ref} / ΔV_{KA}	Ratio of change in reference voltage to the change in cathode voltage	Figure 5	I_{KA} = 10 mA	ΔV_{KA} = 10 V − V_{ref}		-1.4	-2.7	mV/V
				ΔV_{KA} = 36 V − 10 V		-1	-2	
I_{ref}	Reference input current	Figure 5	I_{KA} = 10 mA, R1 = 10 kΩ, R2 = ∞			2	4	µA
$I_{I(dev)}$	Deviation of reference input current over full temperature range(1)	Figure 5	I_{KA} = 10 mA, R1 = 10 kΩ, R2 = ∞			0.8	2.5	µA
I_{min}	Minimum cathode current for regulation	Figure 4	V_{KA} = V_{ref}			0.4	0.7	mA
I_{off}	Off-state cathode current	Figure 6	V_{KA} = 36 V, V_{ref} = 0			0.1	0.5	µA
$\|z_{KA}\|$	Dynamic impedance(2)	Figure 4	V_{KA} = V_{ref}, f ≤ 1 kHz, I_{KA} = 1 mA to 100 mA			0.2	0.5	Ω

(1) The deviation parameters $V_{ref(dev)}$ and $I_{ref(dev)}$ are defined as the differences between the maximum and minimum values obtained over the rated temperature range. The average full-range temperature coefficient of the reference input voltage α_{Vref} is defined as:

$$\left|\alpha_{vref}\right| \left(\frac{ppm}{°C}\right) = \frac{\left(\frac{V_{I(dev)}}{V_{ref\ at\ 25°C}}\right) \times 10^6}{\Delta T_A}$$

where:

ΔT_A is the rated operating temperature range of the device.

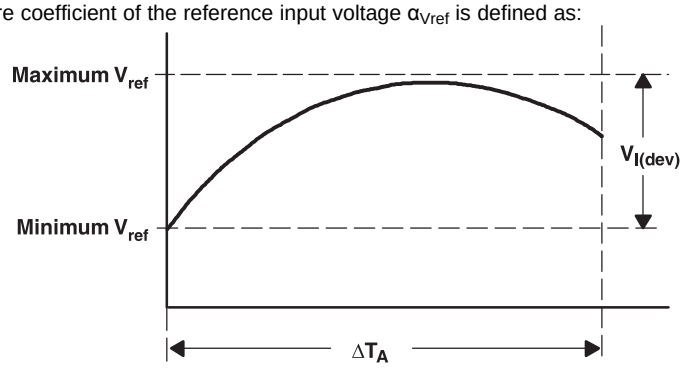

α_{Vref} is positive or negative, depending on whether minimum V_{ref} or maximum V_{ref}, respectively, occurs at the lower temperature.

(2) The dynamic impedance is defined as: $|z_{KA}| = \frac{\Delta V_{KA}}{\Delta I_{KA}}$

When the device is operating with two external resistors (see Figure 5), the total dynamic impedance of the circuit is given by: $|z'| = \frac{\Delta V}{\Delta I}$

which is approximately equal to $|z_{KA}|\left(1 + \frac{R1}{R2}\right)$.

Copyright © 2004–2012, Texas Instruments Incorporated

ELECTRICAL CHARACTERISTICS

over recommended operating conditions, T_A = 25°C (unless otherwise noted)

PARAMETER		TEST CIRCUIT	TEST CONDITIONS		TL431BQ, TL432BQ			UNIT
					MIN	TYP	MAX	
V_{ref}	Reference voltage	Figure 4	V_{KA} = V_{ref}, I_{KA} = 10 mA		2483	2495	2507	mV
$V_{I(dev)}$	Deviation of reference input voltage over full temperature range(1)	Figure 4	V_{KA} = V_{ref}, I_{KA} = 10 mA			14	34	mV
ΔV_{ref} / ΔV_{KA}	Ratio of change in reference voltage to the change in cathode voltage	Figure 5	I_{KA} = 10 mA	ΔV_{KA} = 10 V − V_{ref}		-1.4	-2.7	mV/V
				ΔV_{KA} = 36 V − 10 V		-1	-2	
I_{ref}	Reference input current	Figure 5	I_{KA} = 10 mA, R1 = 10 kΩ, R2 = ∞			2	4	µA
$I_{I(dev)}$	Deviation of reference input current over full temperature range(1)	Figure 5	I_{KA} = 10 mA, R1 = 10 kΩ, R2 = ∞			0.8	2.5	µA
I_{min}	Minimum cathode current for regulation	Figure 4	V_{KA} = V_{ref}			0.4	0.7	mA
I_{off}	Off-state cathode current	Figure 6	V_{KA} = 36 V, V_{ref} = 0			0.1	0.5	µA
$\lvert z_{KA} \rvert$	Dynamic impedance(2)	Figure 4	V_{KA} = V_{ref}, f ≤ 1 kHz, I_{KA} = 1 mA to 100 mA			0.2	0.5	Ω

(1) The deviation parameters $V_{ref(dev)}$ and $I_{ref(dev)}$ are defined as the differences between the maximum and minimum values obtained over the rated temperature range. The average full-range temperature coefficient of the reference input voltage α_{Vref} is defined as:

$$\left|\alpha_{Vref}\right| \left(\frac{ppm}{°C}\right) = \frac{\left(\frac{V_{I(dev)}}{V_{ref\ at\ 25°C}}\right) \times 10^6}{\Delta T_A}$$

where:
ΔT_A is the rated operating temperature range of the device.

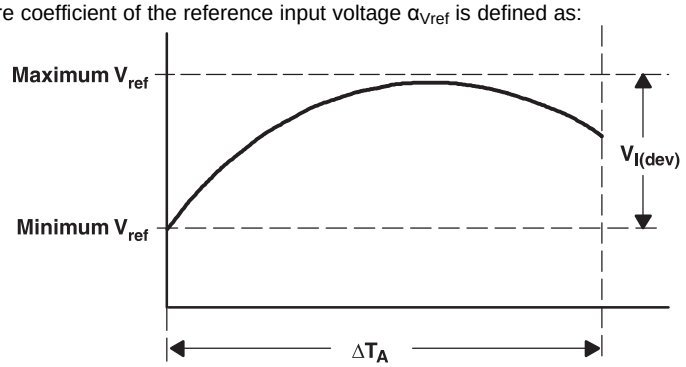

α_{Vref} is positive or negative, depending on whether minimum V_{ref} or maximum V_{ref}, respectively, occurs at the lower temperature.

(2) The dynamic impedance is defined as: $\lvert z_{KA} \rvert = \frac{\Delta V_{KA}}{\Delta I_{KA}}$

When the device is operating with two external resistors (see Figure 5), the total dynamic impedance of the circuit is given by: $\lvert z' \rvert = \frac{\Delta V}{\Delta I}$

which is approximately equal to $\lvert z_{KA} \rvert \left(1 + \frac{R1}{R2}\right)$.

PARAMETER MEASUREMENT INFORMATION

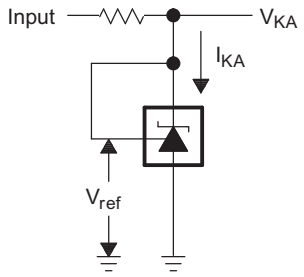

Figure 4. Test Circuit for $V_{KA} = V_{ref}$

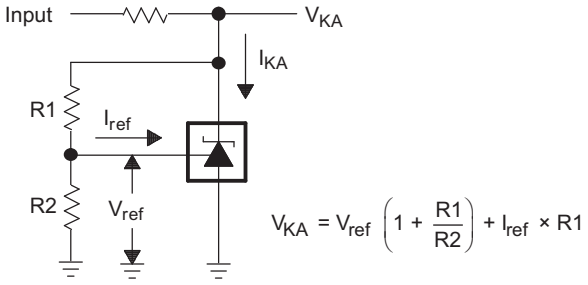

Figure 5. Test Circuit for $V_{KA} > V_{ref}$

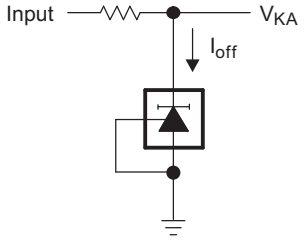

Figure 6. Test Circuit for I_{off}

Copyright © 2004–2012, Texas Instruments Incorporated

TYPICAL CHARACTERISTICS

Data at high and low temperatures are applicable only within the recommended operating free-air temperature ranges of the various devices.

Table 1. Table of Graphs

GRAPH	FIGURE
Reference voltage vs Free-air temperature	Figure 7
Reference current vs Free-air temperature	Figure 8
Cathode current vs Cathode voltage	Figure 9
Off-state cathode current vs Free-air temperature	Figure 10, Figure 11
Ratio of delta reference voltage to delta cathode voltage vs Free-air temperature	Figure 12
Equivalent input-noise voltage vs Frequency	Figure 13
Equivalent input-noise voltage over a 10-second period	Figure 14
Small-signal voltage amplification vs Frequency	Figure 15
Reference impedance vs Frequency	Figure 16
Pulse response	Figure 17
Stability boundary conditions	Figure 18, Figure 19

Copyright © 2004–2012, Texas Instruments Incorporated

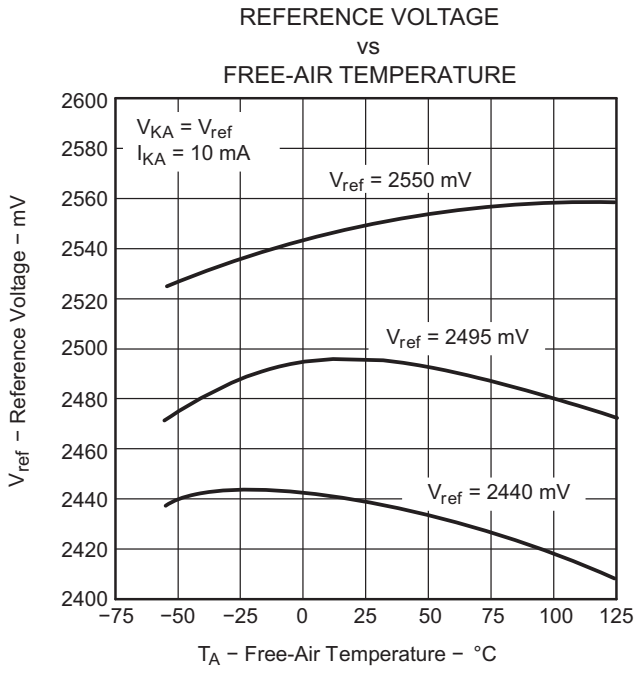

Figure 7.

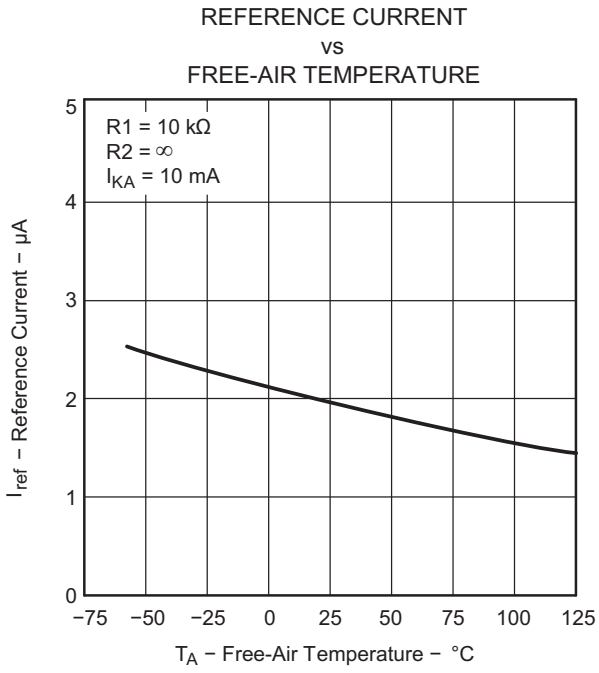

Figure 8.

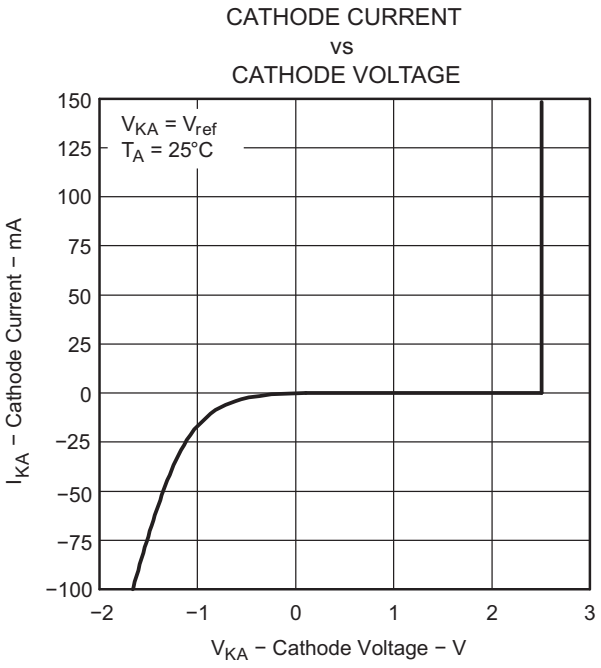

Figure 9.

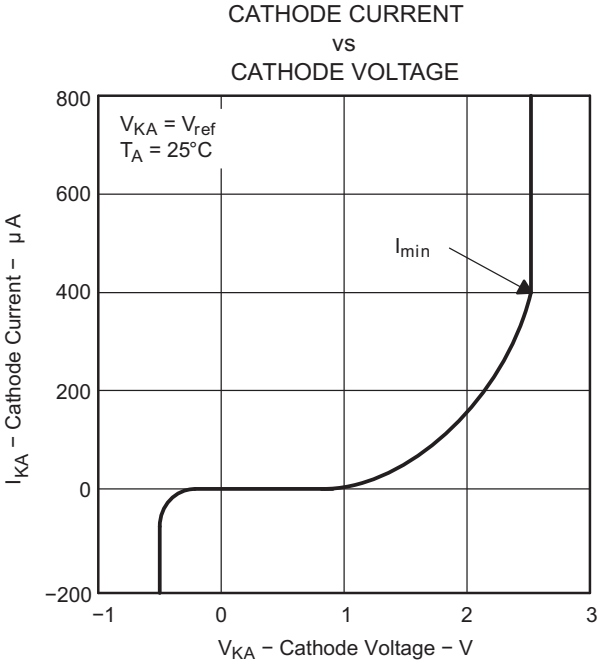

Figure 10.

Copyright © 2004–2012, Texas Instruments Incorporated

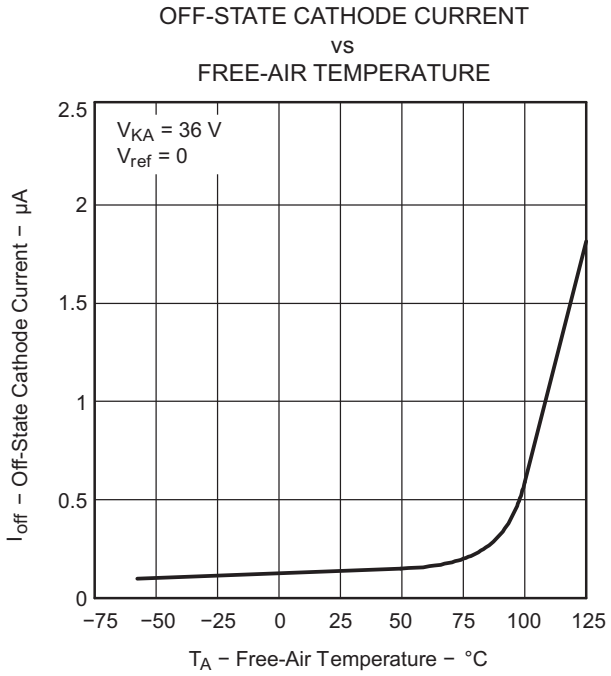

Figure 11.

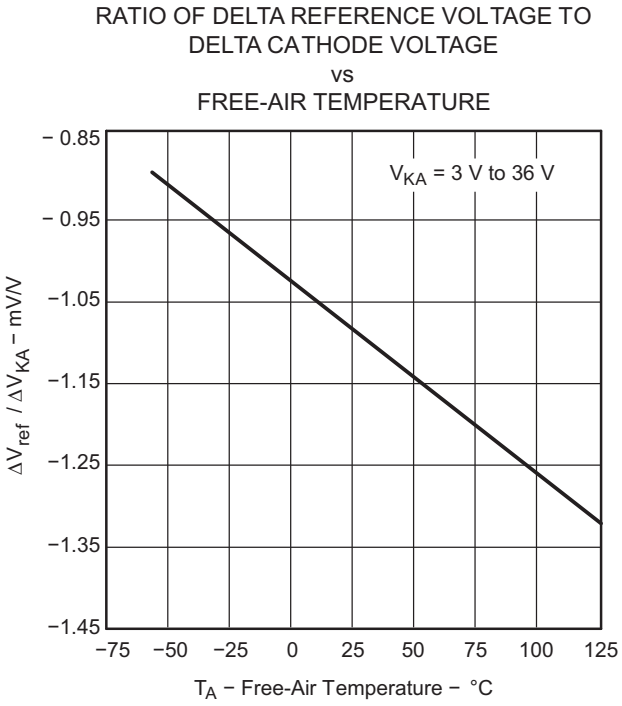

Figure 12.

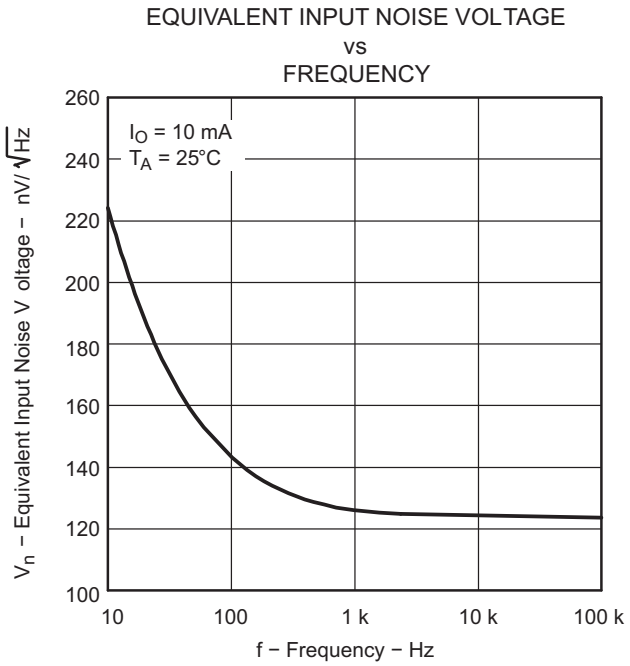

Figure 13.

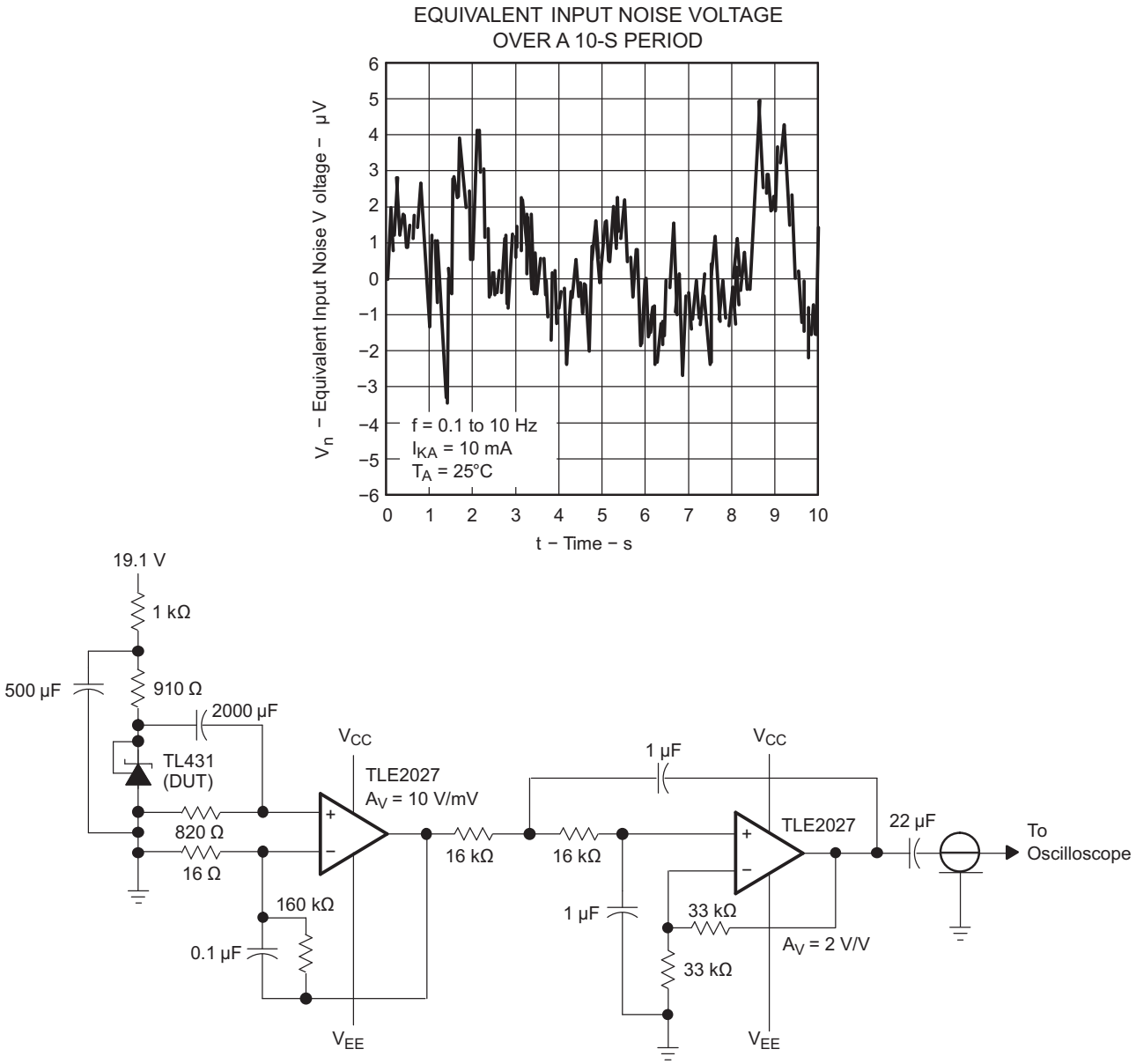

Figure 14.

Copyright © 2004–2012, Texas Instruments Incorporated

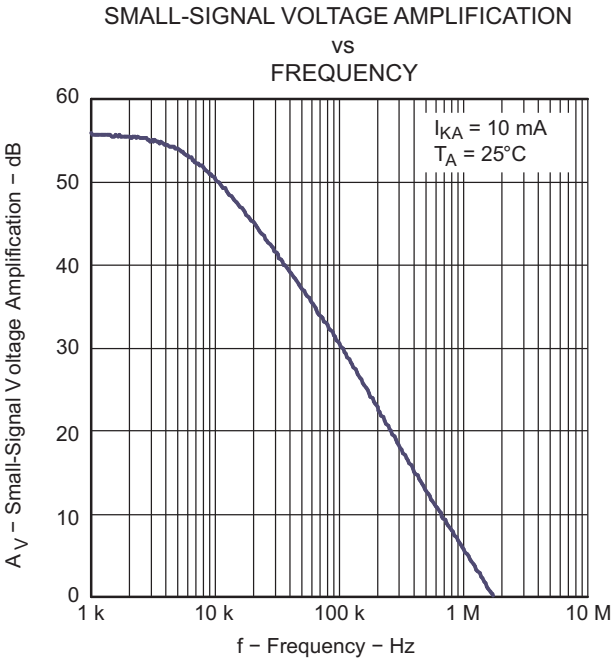

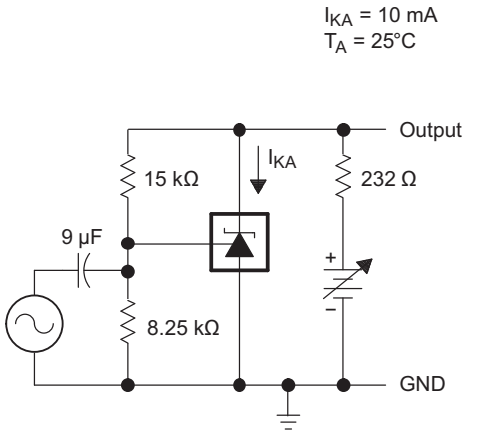

TEST CIRCUIT FOR VOLTAGE AMPLIFICATION

Figure 15.

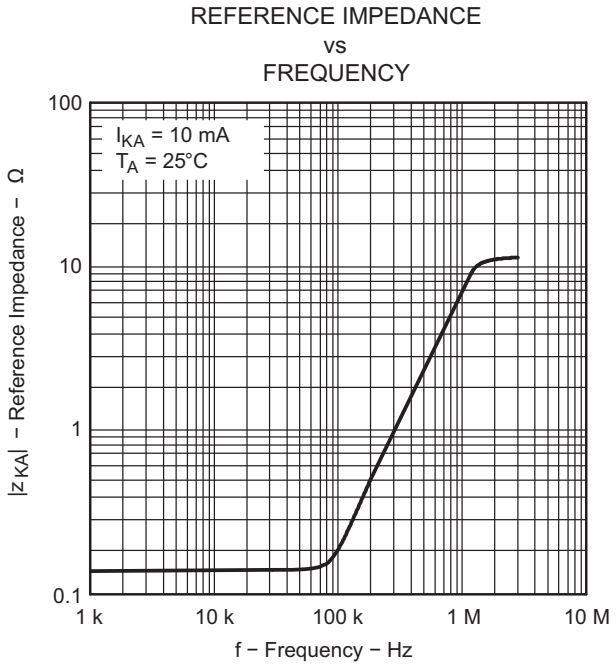

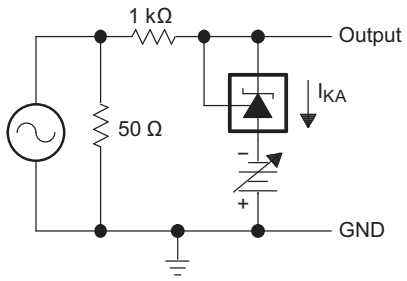

TEST CIRCUIT FOR REFERENCE IMPEDANCE

Figure 16.

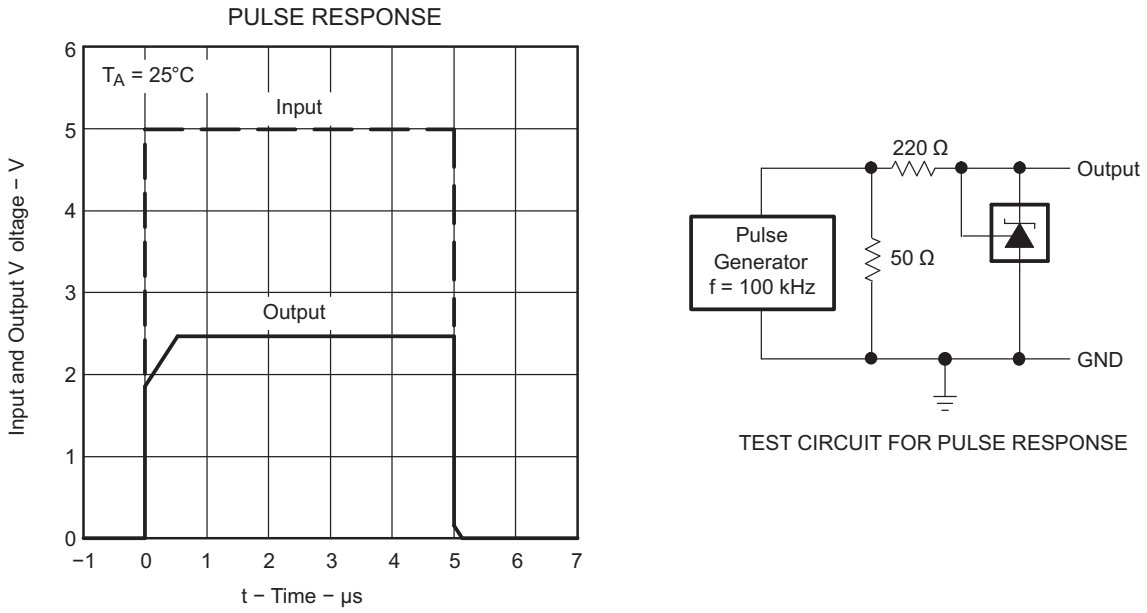

Figure 17.

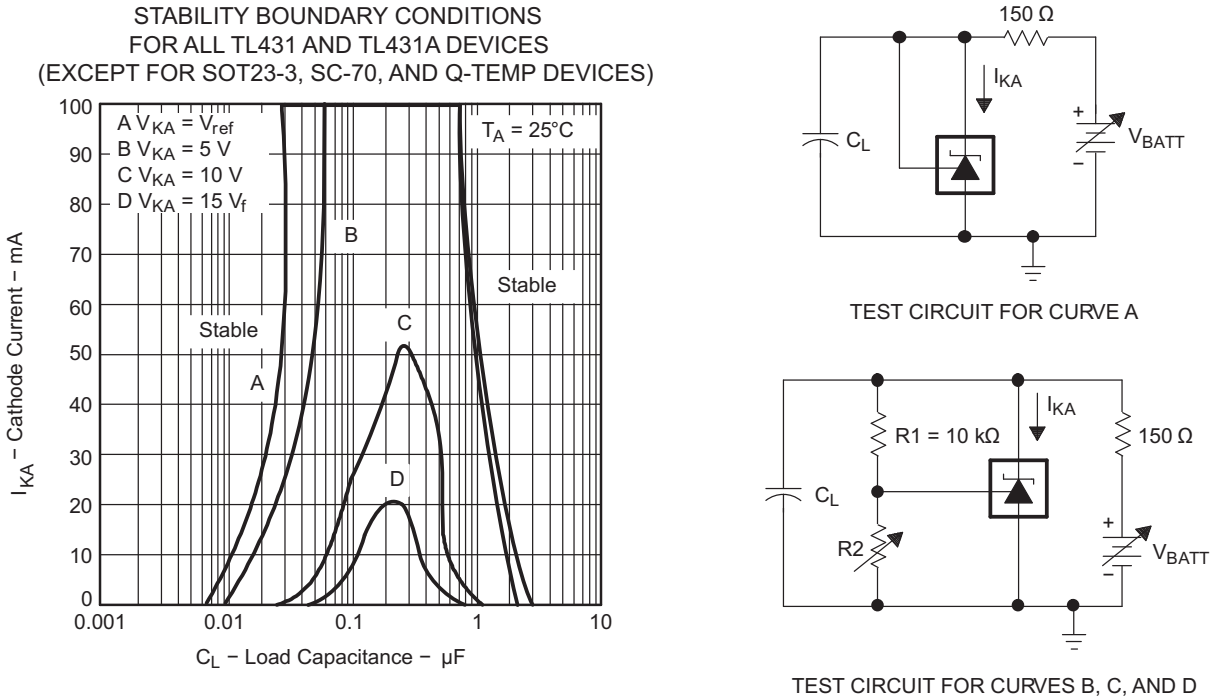

A. The areas under the curves represent conditions that may cause the device to oscillate. For curves B, C, and D, R2 and V+ are adjusted to establish the initial V_{KA} and I_{KA} conditions, with C_L = 0. V_{BATT} and C_L then are adjusted to determine the ranges of stability.

Figure 18.

Copyright © 2004–2012, Texas Instruments Incorporated

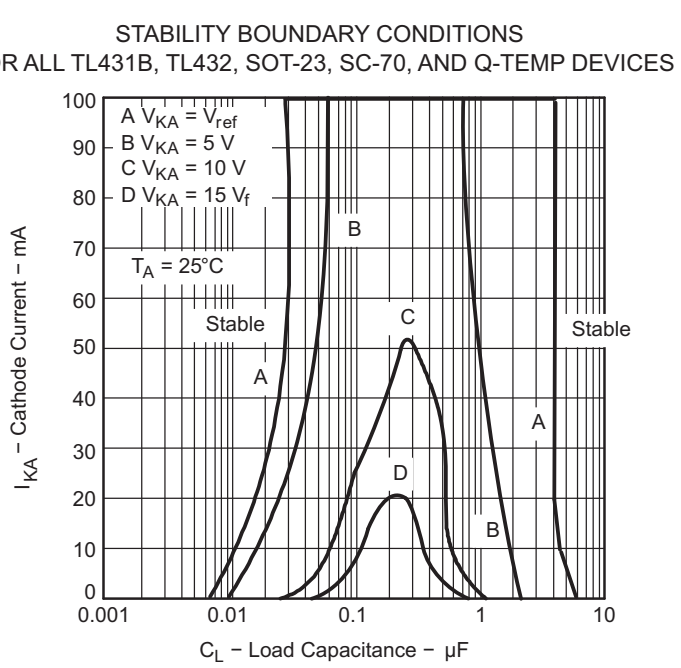

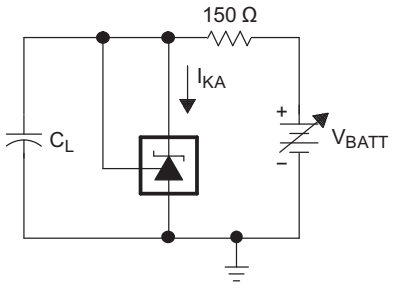

TEST CIRCUIT FOR CURVE A

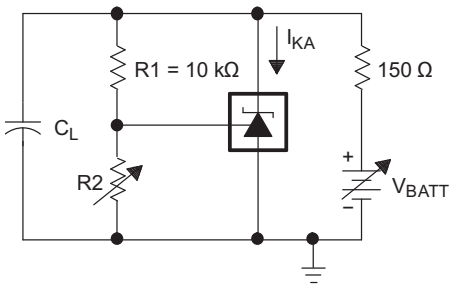

TEST CIRCUIT FOR CURVES B, C, AND D

A. The areas under the curves represent conditions that may cause the device to oscillate. For curves B, C, and D, R2 and V+ are adjusted to establish the initial V_{KA} and I_{KA} conditions, with C_L = 0. V_{BATT} and C_L then are adjusted to determine the ranges of stability.

Figure 19.

APPLICATION INFORMATION

Table 2. Table of Application Circuits

APPLICATION	FIGURE
Shunt regulator	Figure 20
Single-supply comparator with temperature-compensated threshold	Figure 21
Precision high-current series regulator	Figure 22
Output control of a three-terminal fixed regulator	Figure 23
High-current shunt regulator	Figure 24
Crowbar Circuit	Figure 25
Precision 5-V, 1.5-A regulator	Figure 26
Efficient 5-V precision regulator	Figure 27
PWM converter with reference	Figure 28
Voltage monitor	Figure 29
Delay timer	Figure 30
Precision current limiter	Figure 31
Precision constant-current sink	Figure 32

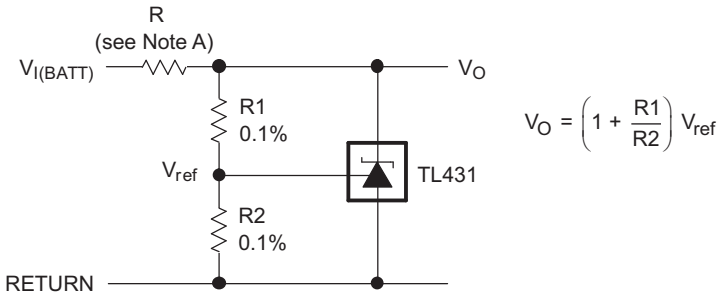

A. R should provide cathode current ≥1 mA to the TL431 at minimum $V_{(BATT)}$.

Figure 20. Shunt Regulator

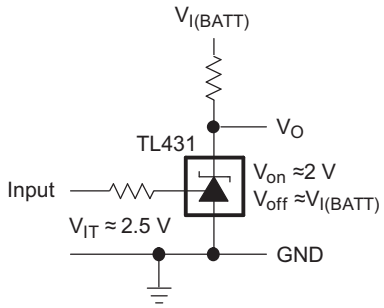

Figure 21. Single-Supply Comparator With Temperature-Compensated Threshold

Copyright © 2004–2012, Texas Instruments Incorporated

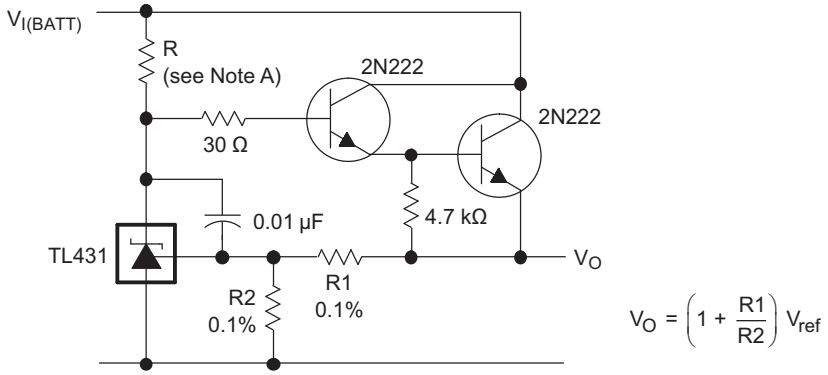

A. R should provide cathode current ≥1 mA to the TL431 at minimum $V_{(BATT)}$.

Figure 22. Precision High-Current Series Regulator

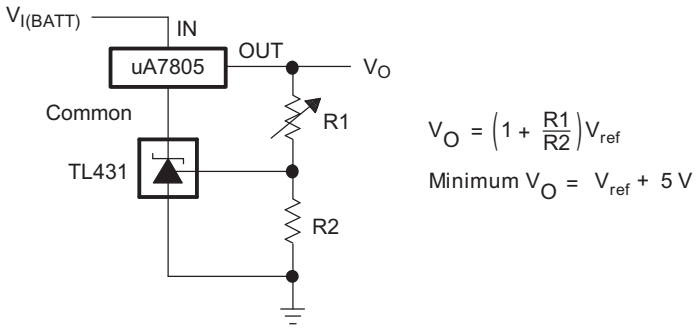

Figure 23. Output Control of a Three-Terminal Fixed Regulator

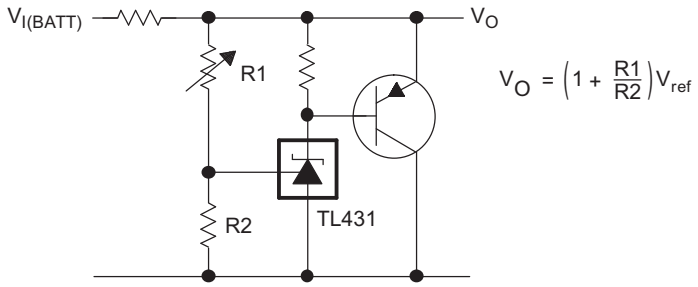

Figure 24. High-Current Shunt Regulator

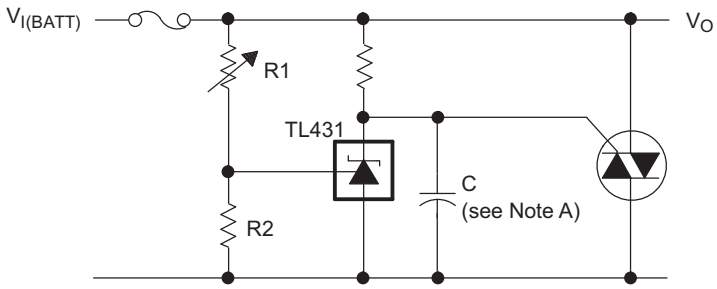

A. Refer to the stability boundary conditions in Figure 18 and Figure 19 to determine allowable values for C.

Figure 25. Crowbar Circuit

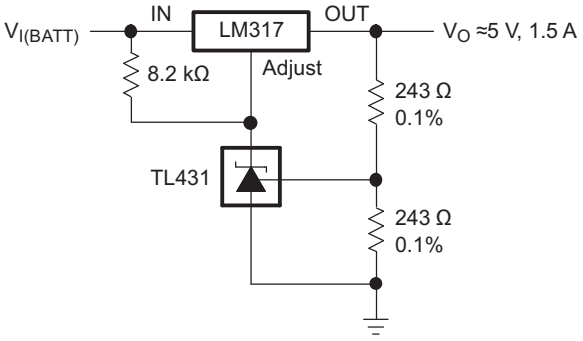

Figure 26. Precision 5-V, 1.5-A Regulator

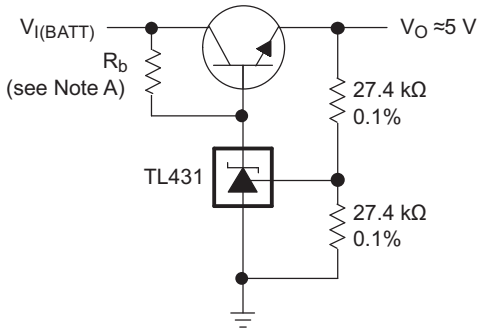

A. R_b should provide cathode current ≥1 mA to the TL431.

Figure 27. Efficient 5-V Precision Regulator

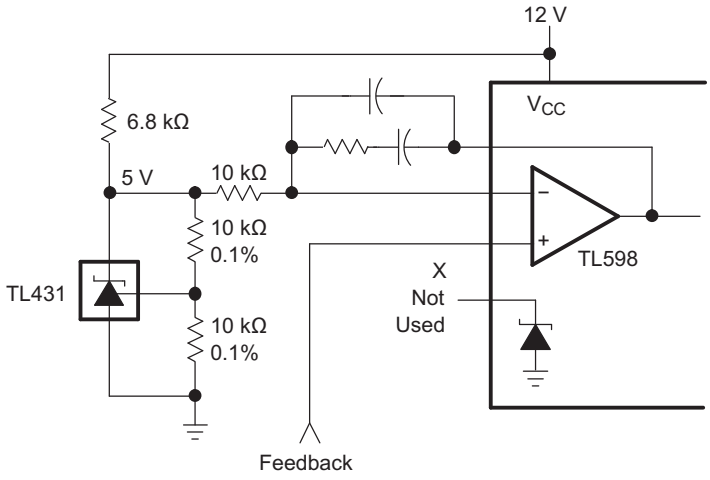

Figure 28. PWM Converter With Reference

Copyright © 2004–2012, Texas Instruments Incorporated

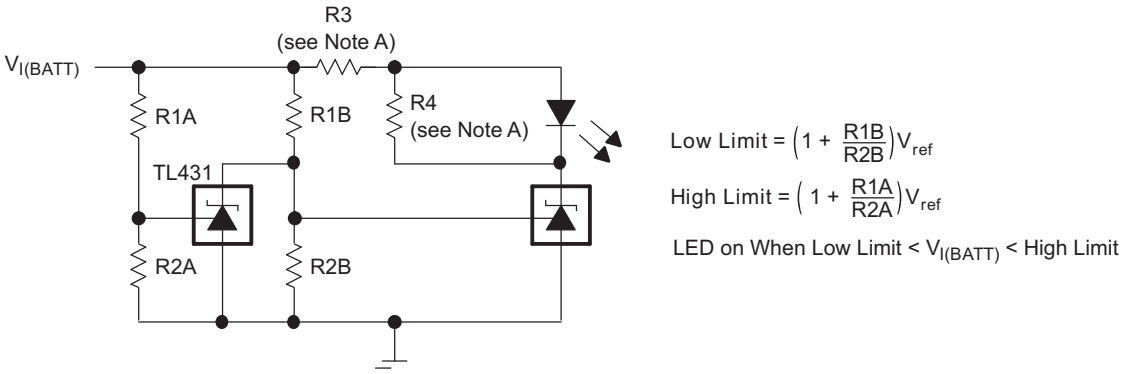

A. Select R3 and R4 to provide the desired LED intensity and cathode current ≥1 mA to the TL431 at the available $V_{I(BATT)}$.

Figure 29. Voltage Monitor

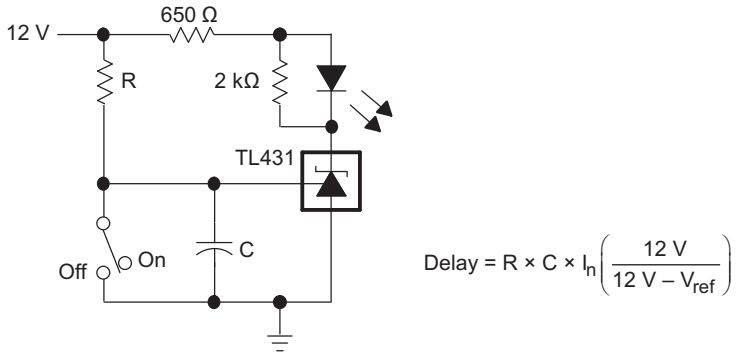

Figure 30. Delay Timer

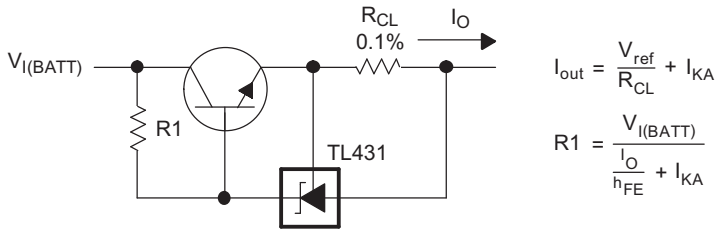

Figure 31. Precision Current Limiter

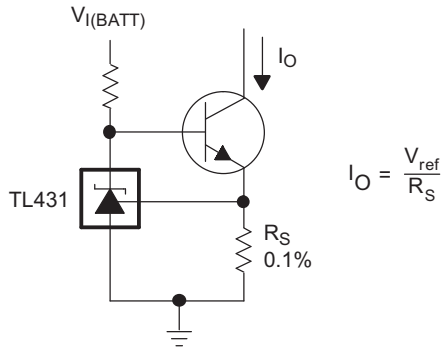

Figure 32. Precision Constant-Current Sink

REVISION HISTORY

Changes from Revision K (June 2010) to Revision L **Page**

- Deleted T_A values under TEST CONDITIONS for $V_{I(dev)}$ and $I_{I(dev)}$ PARAMTERS in the ELECTRICAL CHRACTERISTICS table. 11

Changes from Revision L (Feb 2011) to Revision M **Page**

- Updated orderable part number in ordering information table. 7

Copyright © 2004–2012, Texas Instruments Incorporated

PACKAGING INFORMATION

Orderable Device	Status (1)	Package Type	Package Drawing	Pins	Package Qty	Eco Plan (2)	Lead/Ball Finish	MSL Peak Temp (3)	Op Temp (°C)	Top-Side Markings (4)	Samples
TL431ACD	ACTIVE	SOIC	D	8	75	Green (RoHS & no Sb/Br)	CU NIPDAU	Level-1-260C-UNLIM	0 to 70	431AC	Samples
TL431ACDBVR	ACTIVE	SOT-23	DBV	5	3000	Green (RoHS & no Sb/Br)	CU NIPDAU	Level-1-260C-UNLIM	0 to 70	(TAC3, TACG, TACS)	Samples
TL431ACDBVRE4	ACTIVE	SOT-23	DBV	5	3000	Green (RoHS & no Sb/Br)	CU NIPDAU	Level-1-260C-UNLIM	0 to 70	(TAC3, TACG, TACS)	Samples
TL431ACDBVRG4	ACTIVE	SOT-23	DBV	5	3000	Green (RoHS & no Sb/Br)	CU NIPDAU	Level-1-260C-UNLIM	0 to 70	(TAC3, TACG, TACS)	Samples
TL431ACDBVT	ACTIVE	SOT-23	DBV	5	250	Green (RoHS & no Sb/Br)	CU NIPDAU	Level-1-260C-UNLIM	0 to 70	(TAC3, TACG, TACU)	Samples
TL431ACDBVTE4	ACTIVE	SOT-23	DBV	5	250	Green (RoHS & no Sb/Br)	CU NIPDAU	Level-1-260C-UNLIM	0 to 70	(TAC3, TACG, TACU)	Samples
TL431ACDBVTG4	ACTIVE	SOT-23	DBV	5	250	Green (RoHS & no Sb/Br)	CU NIPDAU	Level-1-260C-UNLIM	0 to 70	(TAC3, TACG, TACU)	Samples
TL431ACDBZR	ACTIVE	SOT-23	DBZ	3	3000	Green (RoHS & no Sb/Br)	CU NIPDAU	Level-1-260C-UNLIM	0 to 70	(TAC3, TACS, TACU)	Samples
TL431ACDBZRG4	ACTIVE	SOT-23	DBZ	3	3000	Green (RoHS & no Sb/Br)	CU NIPDAU	Level-1-260C-UNLIM	0 to 70	(TAC3, TACS, TACU)	Samples
TL431ACDBZT	ACTIVE	SOT-23	DBZ	3	250	Green (RoHS & no Sb/Br)	CU NIPDAU	Level-1-260C-UNLIM	0 to 70	(TAC3, TACS, TACU)	Samples
TL431ACDBZTG4	ACTIVE	SOT-23	DBZ	3	250	Green (RoHS & no Sb/Br)	CU NIPDAU	Level-1-260C-UNLIM	0 to 70	(TAC3, TACS, TACU)	Samples
TL431ACDCKR	ACTIVE	SC70	DCK	6	3000	Green (RoHS & no Sb/Br)	CU NIPDAU	Level-1-260C-UNLIM	0 to 70	(T4S, T4U)	Samples
TL431ACDCKRE4	ACTIVE	SC70	DCK	6	3000	Green (RoHS & no Sb/Br)	CU NIPDAU	Level-1-260C-UNLIM	0 to 70	(T4S, T4U)	Samples
TL431ACDCKRG4	ACTIVE	SC70	DCK	6	3000	Green (RoHS & no Sb/Br)	CU NIPDAU	Level-1-260C-UNLIM	0 to 70	(T4S, T4U)	Samples
TL431ACDCKT	ACTIVE	SC70	DCK	6	250	Green (RoHS & no Sb/Br)	CU NIPDAU	Level-1-260C-UNLIM	0 to 70	T4U	Samples
TL431ACDCKTE4	ACTIVE	SC70	DCK	6	250	Green (RoHS & no Sb/Br)	CU NIPDAU	Level-1-260C-UNLIM	0 to 70	T4U	Samples
TL431ACDCKTG4	ACTIVE	SC70	DCK	6	250	Green (RoHS & no Sb/Br)	CU NIPDAU	Level-1-260C-UNLIM	0 to 70	T4U	Samples

Orderable Device	Status (1)	Package Type	Package Drawing	Pins	Package Qty	Eco Plan (2)	Lead/Ball Finish	MSL Peak Temp (3)	Op Temp (°C)	Top-Side Markings (4)	Samples
TL431ACDG4	ACTIVE	SOIC	D	8	75	Green (RoHS & no Sb/Br)	CU NIPDAU	Level-1-260C-UNLIM	0 to 70	431AC	Samples
TL431ACDR	ACTIVE	SOIC	D	8	2500	Green (RoHS & no Sb/Br)	CU NIPDAU	Level-1-260C-UNLIM	0 to 70	431AC	Samples
TL431ACDRG4	ACTIVE	SOIC	D	8	2500	Green (RoHS & no Sb/Br)	CU NIPDAU	Level-1-260C-UNLIM	0 to 70	431AC	Samples
TL431ACLP	ACTIVE	TO-92	LP	3	1000	Pb-Free (RoHS)	CU SN	N / A for Pkg Type	0 to 70	TL431AC	Samples
TL431ACLPE3	ACTIVE	TO-92	LP	3	1000	Pb-Free (RoHS)	CU SN	N / A for Pkg Type	0 to 70	TL431AC	Samples
TL431ACLPM	ACTIVE	TO-92	LP	3	2000	Pb-Free (RoHS)	CU SN	N / A for Pkg Type	0 to 70	TL431AC	Samples
TL431ACLPR	ACTIVE	TO-92	LP	3	2000	Pb-Free (RoHS)	CU SN	N / A for Pkg Type	0 to 70	TL431AC	Samples
TL431ACP	ACTIVE	PDIP	P	8	50	Pb-Free (RoHS)	CU NIPDAU	N / A for Pkg Type	0 to 70	TL431ACP	Samples
TL431ACPE4	ACTIVE	PDIP	P	8	50	Pb-Free (RoHS)	CU NIPDAU	N / A for Pkg Type	0 to 70	TL431ACP	Samples
TL431ACPK	ACTIVE	SOT-89	PK	3	1000	Green (RoHS & no Sb/Br)	CU SN	Level-2-260C-1 YEAR	0 to 70	4A	Samples
TL431ACPKG3	ACTIVE	SOT-89	PK	3	1000	Green (RoHS & no Sb/Br)	CU SN	Level-2-260C-1 YEAR	0 to 70	4A	Samples
TL431ACPSR	ACTIVE	SO	PS	8	2000	Green (RoHS & no Sb/Br)	CU NIPDAU	Level-1-260C-UNLIM	0 to 70	T431A	Samples
TL431ACPSRE4	ACTIVE	SO	PS	8	2000	Green (RoHS & no Sb/Br)	CU NIPDAU	Level-1-260C-UNLIM	0 to 70	T431A	Samples
TL431ACPSRG4	ACTIVE	SO	PS	8	2000	Green (RoHS & no Sb/Br)	CU NIPDAU	Level-1-260C-UNLIM	0 to 70	T431A	Samples
TL431ACPW	ACTIVE	TSSOP	PW	8	150	Green (RoHS & no Sb/Br)	CU NIPDAU	Level-1-260C-UNLIM	0 to 70	T431A	Samples
TL431ACPWE4	ACTIVE	TSSOP	PW	8	150	Green (RoHS & no Sb/Br)	CU NIPDAU	Level-1-260C-UNLIM	0 to 70	T431A	Samples
TL431ACPWG4	ACTIVE	TSSOP	PW	8	150	Green (RoHS & no Sb/Br)	CU NIPDAU	Level-1-260C-UNLIM	0 to 70	T431A	Samples
TL431ACPWR	ACTIVE	TSSOP	PW	8	2000	Green (RoHS & no Sb/Br)	CU NIPDAU	Level-1-260C-UNLIM	0 to 70	T431A	Samples

Orderable Device	Status (1)	Package Type	Package Drawing	Pins	Package Qty	Eco Plan (2)	Lead/Ball Finish	MSL Peak Temp (3)	Op Temp (°C)	Top-Side Markings (4)	Samples
TL431ACPWRE4	ACTIVE	TSSOP	PW	8	2000	Green (RoHS & no Sb/Br)	CU NIPDAU	Level-1-260C-UNLIM	0 to 70	T431A	Samples
TL431ACPWRG4	ACTIVE	TSSOP	PW	8	2000	Green (RoHS & no Sb/Br)	CU NIPDAU	Level-1-260C-UNLIM	0 to 70	T431A	Samples
TL431AID	ACTIVE	SOIC	D	8	75	Green (RoHS & no Sb/Br)	CU NIPDAU	Level-1-260C-UNLIM	-40 to 85	431AI	Samples
TL431AIDBVR	ACTIVE	SOT-23	DBV	5	3000	Green (RoHS & no Sb/Br)	CU NIPDAU	Level-1-260C-UNLIM	-40 to 85	(TAI3, TAIG, TAIS)	Samples
TL431AIDBVRE4	ACTIVE	SOT-23	DBV	5	3000	Green (RoHS & no Sb/Br)	CU NIPDAU	Level-1-260C-UNLIM	-40 to 85	(TAI3, TAIG, TAIS)	Samples
TL431AIDBVRG4	ACTIVE	SOT-23	DBV	5	3000	Green (RoHS & no Sb/Br)	CU NIPDAU	Level-1-260C-UNLIM	-40 to 85	(TAI3, TAIG, TAIS)	Samples
TL431AIDBVT	ACTIVE	SOT-23	DBV	5	250	Green (RoHS & no Sb/Br)	CU NIPDAU	Level-1-260C-UNLIM	-40 to 85	(TAI3, TAIG, TAIU)	Samples
TL431AIDBVTE4	ACTIVE	SOT-23	DBV	5	250	Green (RoHS & no Sb/Br)	CU NIPDAU	Level-1-260C-UNLIM	-40 to 85	(TAI3, TAIG, TAIU)	Samples
TL431AIDBVTG4	ACTIVE	SOT-23	DBV	5	250	Green (RoHS & no Sb/Br)	CU NIPDAU	Level-1-260C-UNLIM	-40 to 85	(TAI3, TAIG, TAIU)	Samples
TL431AIDBZR	ACTIVE	SOT-23	DBZ	3	3000	Green (RoHS & no Sb/Br)	CU NIPDAU	Level-1-260C-UNLIM	-40 to 85	(TAI3, TAIS, TAIU)	Samples
TL431AIDBZRG4	ACTIVE	SOT-23	DBZ	3	3000	Green (RoHS & no Sb/Br)	CU NIPDAU	Level-1-260C-UNLIM	-40 to 85	(TAI3, TAIS, TAIU)	Samples
TL431AIDBZT	ACTIVE	SOT-23	DBZ	3	250	Green (RoHS & no Sb/Br)	CU NIPDAU	Level-1-260C-UNLIM	-40 to 85	(TAI3, TAIS, TAIU)	Samples
TL431AIDBZTG4	ACTIVE	SOT-23	DBZ	3	250	Green (RoHS & no Sb/Br)	CU NIPDAU	Level-1-260C-UNLIM	-40 to 85	(TAI3, TAIS, TAIU)	Samples
TL431AIDCKR	ACTIVE	SC70	DCK	6	3000	Green (RoHS & no Sb/Br)	CU NIPDAU	Level-1-260C-UNLIM	-40 to 85	T5U	Samples
TL431AIDCKRE4	ACTIVE	SC70	DCK	6	3000	Green (RoHS & no Sb/Br)	CU NIPDAU	Level-1-260C-UNLIM	-40 to 85	T5U	Samples
TL431AIDCKRG4	ACTIVE	SC70	DCK	6	3000	Green (RoHS & no Sb/Br)	CU NIPDAU	Level-1-260C-UNLIM	-40 to 85	T5U	Samples
TL431AIDCKT	ACTIVE	SC70	DCK	6	250	Green (RoHS & no Sb/Br)	CU NIPDAU	Level-1-260C-UNLIM	-40 to 85	T5U	Samples
TL431AIDCKTE4	ACTIVE	SC70	DCK	6	250	Green (RoHS & no Sb/Br)	CU NIPDAU	Level-1-260C-UNLIM	-40 to 85	T5U	Samples

Orderable Device	Status (1)	Package Type	Package Drawing	Pins	Package Qty	Eco Plan (2)	Lead/Ball Finish	MSL Peak Temp (3)	Op Temp (°C)	Top-Side Markings (4)	Samples
TL431AIDCKTG4	ACTIVE	SC70	DCK	6	250	Green (RoHS & no Sb/Br)	CU NIPDAU	Level-1-260C-UNLIM	-40 to 85	T5U	Samples
TL431AIDG4	ACTIVE	SOIC	D	8	75	Green (RoHS & no Sb/Br)	CU NIPDAU	Level-1-260C-UNLIM	-40 to 85	431AI	Samples
TL431AIDR	ACTIVE	SOIC	D	8	2500	Green (RoHS & no Sb/Br)	CU NIPDAU	Level-1-260C-UNLIM	-40 to 85	431AI	Samples
TL431AIDRG4	ACTIVE	SOIC	D	8	2500	Green (RoHS & no Sb/Br)	CU NIPDAU	Level-1-260C-UNLIM	-40 to 85	431AI	Samples
TL431AILP	ACTIVE	TO-92	LP	3	1000	Pb-Free (RoHS)	CU SN	N / A for Pkg Type	-40 to 85	TL431AI	Samples
TL431AILPM	ACTIVE	TO-92	LP	3	2000	Pb-Free (RoHS)	CU SN	N / A for Pkg Type	-40 to 85	TL431AI	Samples
TL431AILPME3	ACTIVE	TO-92	LP	3	2000	Pb-Free (RoHS)	CU SN	N / A for Pkg Type	-40 to 85	TL431AI	Samples
TL431AILPR	ACTIVE	TO-92	LP	3	2000	Pb-Free (RoHS)	CU SN	N / A for Pkg Type	-40 to 85	TL431AI	Samples
TL431AIP	ACTIVE	PDIP	P	8	50	Pb-Free (RoHS)	CU NIPDAU	N / A for Pkg Type	-40 to 85	TL431AIP	Samples
TL431AIPE4	ACTIVE	PDIP	P	8	50	Pb-Free (RoHS)	CU NIPDAU	N / A for Pkg Type	-40 to 85	TL431AIP	Samples
TL431AIPK	ACTIVE	SOT-89	PK	3	1000	Green (RoHS & no Sb/Br)	CU SN	Level-2-260C-1 YEAR	-40 to 85	4B	Samples
TL431AIPKG3	ACTIVE	SOT-89	PK	3	1000	Green (RoHS & no Sb/Br)	CU SN	Level-2-260C-1 YEAR	-40 to 85	4B	Samples
TL431AQDBVR	ACTIVE	SOT-23	DBV	5	3000	Green (RoHS & no Sb/Br)	CU NIPDAU	Level-1-260C-UNLIM	-40 to 125	(TAQG, TAQU)	Samples
TL431AQDBVRE4	ACTIVE	SOT-23	DBV	5	3000	Green (RoHS & no Sb/Br)	CU NIPDAU	Level-1-260C-UNLIM	-40 to 125	(TAQG, TAQU)	Samples
TL431AQDBVRG4	ACTIVE	SOT-23	DBV	5	3000	Green (RoHS & no Sb/Br)	CU NIPDAU	Level-1-260C-UNLIM	-40 to 125	(TAQG, TAQU)	Samples
TL431AQDBVT	ACTIVE	SOT-23	DBV	5	250	Green (RoHS & no Sb/Br)	CU NIPDAU	Level-1-260C-UNLIM	-40 to 125	(TAQG, TAQU)	Samples
TL431AQDBVTE4	ACTIVE	SOT-23	DBV	5	250	Green (RoHS & no Sb/Br)	CU NIPDAU	Level-1-260C-UNLIM	-40 to 125	(TAQG, TAQU)	Samples
TL431AQDBVTG4	ACTIVE	SOT-23	DBV	5	250	Green (RoHS & no Sb/Br)	CU NIPDAU	Level-1-260C-UNLIM	-40 to 125	(TAQG, TAQU)	Samples

Orderable Device	Status (1)	Package Type	Package Drawing	Pins	Package Qty	Eco Plan (2)	Lead/Ball Finish	MSL Peak Temp (3)	Op Temp (°C)	Top-Side Markings (4)	Samples
TL431AQDBZR	ACTIVE	SOT-23	DBZ	3	3000	Green (RoHS & no Sb/Br)	CU NIPDAU	Level-1-260C-UNLIM	-40 to 125	(TAQ3, TAQS, TAQU)	Samples
TL431AQDBZRG4	ACTIVE	SOT-23	DBZ	3	3000	Green (RoHS & no Sb/Br)	CU NIPDAU	Level-1-260C-UNLIM	-40 to 125	(TAQ3, TAQS, TAQU)	Samples
TL431AQDBZT	ACTIVE	SOT-23	DBZ	3	250	Green (RoHS & no Sb/Br)	CU NIPDAU	Level-1-260C-UNLIM	-40 to 125	(TAQS, TAQU)	Samples
TL431AQDBZTG4	ACTIVE	SOT-23	DBZ	3	250	Green (RoHS & no Sb/Br)	CU NIPDAU	Level-1-260C-UNLIM	-40 to 125	(TAQS, TAQU)	Samples
TL431AQDCKR	ACTIVE	SC70	DCK	6	3000	Green (RoHS & no Sb/Br)	CU NIPDAU	Level-1-260C-UNLIM	-40 to 125	T7U	Samples
TL431AQDCKRE4	ACTIVE	SC70	DCK	6	3000	Green (RoHS & no Sb/Br)	CU NIPDAU	Level-1-260C-UNLIM	-40 to 125	T7U	Samples
TL431AQDCKRG4	ACTIVE	SC70	DCK	6	3000	Green (RoHS & no Sb/Br)	CU NIPDAU	Level-1-260C-UNLIM	-40 to 125	T7U	Samples
TL431AQDCKT	ACTIVE	SC70	DCK	6	250	Green (RoHS & no Sb/Br)	CU NIPDAU	Level-1-260C-UNLIM	-40 to 125	T7U	Samples
TL431AQDCKTE4	ACTIVE	SC70	DCK	6	250	Green (RoHS & no Sb/Br)	CU NIPDAU	Level-1-260C-UNLIM	-40 to 125	T7U	Samples
TL431AQDCKTG4	ACTIVE	SC70	DCK	6	250	Green (RoHS & no Sb/Br)	CU NIPDAU	Level-1-260C-UNLIM	-40 to 125	T7U	Samples
TL431AQPK	ACTIVE	SOT-89	PK	3	1000	Green (RoHS & no Sb/Br)	CU SN	Level-2-260C-1 YEAR	-40 to 125	4D	Samples
TL431AQPKG3	ACTIVE	SOT-89	PK	3	1000	Green (RoHS & no Sb/Br)	CU SN	Level-2-260C-1 YEAR	-40 to 125	4D	Samples
TL431BCD	ACTIVE	SOIC	D	8	75	Green (RoHS & no Sb/Br)	CU NIPDAU	Level-1-260C-UNLIM	0 to 70	T431B	Samples
TL431BCDBVR	ACTIVE	SOT-23	DBV	5	3000	Green (RoHS & no Sb/Br)	CU NIPDAU	Level-1-260C-UNLIM	0 to 70	(T3G3, T3GG, T3GU)	Samples
TL431BCDBVRE4	ACTIVE	SOT-23	DBV	5	3000	Green (RoHS & no Sb/Br)	CU NIPDAU	Level-1-260C-UNLIM	0 to 70	(T3G3, T3GG, T3GU)	Samples
TL431BCDBVRG4	ACTIVE	SOT-23	DBV	5	3000	Green (RoHS & no Sb/Br)	CU NIPDAU	Level-1-260C-UNLIM	0 to 70	(T3G3, T3GG, T3GU)	Samples
TL431BCDBVT	ACTIVE	SOT-23	DBV	5	250	Green (RoHS & no Sb/Br)	CU NIPDAU	Level-1-260C-UNLIM	0 to 70	(T3G3, T3GG, T3GU)	Samples
TL431BCDBVTE4	ACTIVE	SOT-23	DBV	5	250	Green (RoHS & no Sb/Br)	CU NIPDAU	Level-1-260C-UNLIM	0 to 70	(T3G3, T3GG, T3GU)	Samples

Orderable Device	Status (1)	Package Type	Package Drawing	Pins	Package Qty	Eco Plan (2)	Lead/Ball Finish	MSL Peak Temp (3)	Op Temp (°C)	Top-Side Markings (4)	Samples
TL431BCDBVTG4	ACTIVE	SOT-23	DBV	5	250	Green (RoHS & no Sb/Br)	CU NIPDAU	Level-1-260C-UNLIM	0 to 70	(T3G3, T3GG, T3GU)	Samples
TL431BCDBZR	ACTIVE	SOT-23	DBZ	3	3000	Green (RoHS & no Sb/Br)	CU NIPDAU	Level-1-260C-UNLIM	0 to 70	(T3G3, T3GS, T3GU)	Samples
TL431BCDBZRG4	ACTIVE	SOT-23	DBZ	3	3000	Green (RoHS & no Sb/Br)	CU NIPDAU	Level-1-260C-UNLIM	0 to 70	(T3G3, T3GS, T3GU)	Samples
TL431BCDBZT	ACTIVE	SOT-23	DBZ	3	250	Green (RoHS & no Sb/Br)	CU NIPDAU	Level-1-260C-UNLIM	0 to 70	(T3G3, T3GS, T3GU)	Samples
TL431BCDBZTG4	ACTIVE	SOT-23	DBZ	3	250	Green (RoHS & no Sb/Br)	CU NIPDAU	Level-1-260C-UNLIM	0 to 70	(T3G3, T3GS, T3GU)	Samples
TL431BCDCKR	ACTIVE	SC70	DCK	6	3000	Green (RoHS & no Sb/Br)	CU NIPDAU	Level-1-260C-UNLIM	0 to 70	T2U	Samples
TL431BCDCKRE4	ACTIVE	SC70	DCK	6	3000	Green (RoHS & no Sb/Br)	CU NIPDAU	Level-1-260C-UNLIM	0 to 70	T2U	Samples
TL431BCDCKRG4	ACTIVE	SC70	DCK	6	3000	Green (RoHS & no Sb/Br)	CU NIPDAU	Level-1-260C-UNLIM	0 to 70	T2U	Samples
TL431BCDCKT	ACTIVE	SC70	DCK	6	250	Green (RoHS & no Sb/Br)	CU NIPDAU	Level-1-260C-UNLIM	0 to 70	T2U	Samples
TL431BCDCKTE4	ACTIVE	SC70	DCK	6	250	Green (RoHS & no Sb/Br)	CU NIPDAU	Level-1-260C-UNLIM	0 to 70	T2U	Samples
TL431BCDCKTG4	ACTIVE	SC70	DCK	6	250	Green (RoHS & no Sb/Br)	CU NIPDAU	Level-1-260C-UNLIM	0 to 70	T2U	Samples
TL431BCDE4	ACTIVE	SOIC	D	8	75	Green (RoHS & no Sb/Br)	CU NIPDAU	Level-1-260C-UNLIM	0 to 70	T431B	Samples
TL431BCDG4	ACTIVE	SOIC	D	8	75	Green (RoHS & no Sb/Br)	CU NIPDAU	Level-1-260C-UNLIM	0 to 70	T431B	Samples
TL431BCDR	ACTIVE	SOIC	D	8	2500	Green (RoHS & no Sb/Br)	CU NIPDAU	Level-1-260C-UNLIM	0 to 70	T431B	Samples
TL431BCDRE4	ACTIVE	SOIC	D	8	2500	Green (RoHS & no Sb/Br)	CU NIPDAU	Level-1-260C-UNLIM	0 to 70	T431B	Samples
TL431BCDRG4	ACTIVE	SOIC	D	8	2500	Green (RoHS & no Sb/Br)	CU NIPDAU	Level-1-260C-UNLIM	0 to 70	T431B	Samples
TL431BCLP	ACTIVE	TO-92	LP	3	1000	Pb-Free (RoHS)	CU SN	N / A for Pkg Type	0 to 70	T431B	Samples
TL431BCLPE3	ACTIVE	TO-92	LP	3	1000	Pb-Free (RoHS)	CU SN	N / A for Pkg Type	0 to 70	T431B	Samples

Orderable Device	Status (1)	Package Type	Package Drawing	Pins	Package Qty	Eco Plan (2)	Lead/Ball Finish	MSL Peak Temp (3)	Op Temp (°C)	Top-Side Markings (4)	Samples
TL431BCLPR	ACTIVE	TO-92	LP	3	2000	Pb-Free (RoHS)	CU SN	N / A for Pkg Type	0 to 70	T431B	Samples
TL431BCLPRE3	ACTIVE	TO-92	LP	3	2000	Pb-Free (RoHS)	CU SN	N / A for Pkg Type	0 to 70	T431B	Samples
TL431BCP	ACTIVE	PDIP	P	8	50	Pb-Free (RoHS)	CU NIPDAU	N / A for Pkg Type	0 to 70	TL431BCP	Samples
TL431BCPE4	ACTIVE	PDIP	P	8	50	Pb-Free (RoHS)	CU NIPDAU	N / A for Pkg Type	0 to 70	TL431BCP	Samples
TL431BCPK	ACTIVE	SOT-89	PK	3	1000	Green (RoHS & no Sb/Br)	CU SN	Level-2-260C-1 YEAR	0 to 70	4C	Samples
TL431BCPKG3	ACTIVE	SOT-89	PK	3	1000	Green (RoHS & no Sb/Br)	CU SN	Level-2-260C-1 YEAR	0 to 70	4C	Samples
TL431BCPSR	ACTIVE	SO	PS	8	2000	Green (RoHS & no Sb/Br)	CU NIPDAU	Level-1-260C-UNLIM	0 to 70	T431B	Samples
TL431BCPSRE4	ACTIVE	SO	PS	8	2000	Green (RoHS & no Sb/Br)	CU NIPDAU	Level-1-260C-UNLIM	0 to 70	T431B	Samples
TL431BCPSRG4	ACTIVE	SO	PS	8	2000	Green (RoHS & no Sb/Br)	CU NIPDAU	Level-1-260C-UNLIM	0 to 70	T431B	Samples
TL431BCPWR	ACTIVE	TSSOP	PW	8	2000	Green (RoHS & no Sb/Br)	CU NIPDAU	Level-1-260C-UNLIM	0 to 70	T431B	Samples
TL431BCPWRE4	ACTIVE	TSSOP	PW	8	2000	Green (RoHS & no Sb/Br)	CU NIPDAU	Level-1-260C-UNLIM	0 to 70	T431B	Samples
TL431BCPWRG4	ACTIVE	TSSOP	PW	8	2000	Green (RoHS & no Sb/Br)	CU NIPDAU	Level-1-260C-UNLIM	0 to 70	T431B	Samples
TL431BID	ACTIVE	SOIC	D	8	75	Green (RoHS & no Sb/Br)	CU NIPDAU	Level-1-260C-UNLIM	-40 to 85	Z431B	Samples
TL431BIDBVR	ACTIVE	SOT-23	DBV	5	3000	Green (RoHS & no Sb/Br)	CU NIPDAU	Level-1-260C-UNLIM	-40 to 85	(T3F3, T3FG, T3FU)	Samples
TL431BIDBVRE4	ACTIVE	SOT-23	DBV	5	3000	Green (RoHS & no Sb/Br)	CU NIPDAU	Level-1-260C-UNLIM	-40 to 85	(T3F3, T3FG, T3FU)	Samples
TL431BIDBVRG4	ACTIVE	SOT-23	DBV	5	3000	Green (RoHS & no Sb/Br)	CU NIPDAU	Level-1-260C-UNLIM	-40 to 85	(T3F3, T3FG, T3FU)	Samples
TL431BIDBVT	ACTIVE	SOT-23	DBV	5	250	Green (RoHS & no Sb/Br)	CU NIPDAU	Level-1-260C-UNLIM	-40 to 85	(T3F3, T3FG, T3FU)	Samples
TL431BIDBVTE4	ACTIVE	SOT-23	DBV	5	250	Green (RoHS & no Sb/Br)	CU NIPDAU	Level-1-260C-UNLIM	-40 to 85	(T3F3, T3FG, T3FU)	Samples

Orderable Device	Status (1)	Package Type	Package Drawing	Pins	Package Qty	Eco Plan (2)	Lead/Ball Finish	MSL Peak Temp (3)	Op Temp (°C)	Top-Side Markings (4)	Samples
TL431BIDBVTG4	ACTIVE	SOT-23	DBV	5	250	Green (RoHS & no Sb/Br)	CU NIPDAU	Level-1-260C-UNLIM	-40 to 85	(T3F3, T3FG, T3FU)	Samples
TL431BIDBZR	ACTIVE	SOT-23	DBZ	3	3000	Green (RoHS & no Sb/Br)	CU NIPDAU	Level-1-260C-UNLIM	-40 to 85	(T3F3, T3FS, T3FU)	Samples
TL431BIDBZRG4	ACTIVE	SOT-23	DBZ	3	3000	Green (RoHS & no Sb/Br)	CU NIPDAU	Level-1-260C-UNLIM	-40 to 85	(T3F3, T3FS, T3FU)	Samples
TL431BIDBZT	ACTIVE	SOT-23	DBZ	3	250	Green (RoHS & no Sb/Br)	CU NIPDAU	Level-1-260C-UNLIM	-40 to 85	(T3F3, T3FS, T3FU)	Samples
TL431BIDBZTG4	ACTIVE	SOT-23	DBZ	3	250	Green (RoHS & no Sb/Br)	CU NIPDAU	Level-1-260C-UNLIM	-40 to 85	(T3F3, T3FS, T3FU)	Samples
TL431BIDCKR	ACTIVE	SC70	DCK	6	3000	Green (RoHS & no Sb/Br)	CU NIPDAU	Level-1-260C-UNLIM	-40 to 85	T3U	Samples
TL431BIDCKRE4	ACTIVE	SC70	DCK	6	3000	Green (RoHS & no Sb/Br)	CU NIPDAU	Level-1-260C-UNLIM	-40 to 85	T3U	Samples
TL431BIDCKRG4	ACTIVE	SC70	DCK	6	3000	Green (RoHS & no Sb/Br)	CU NIPDAU	Level-1-260C-UNLIM	-40 to 85	T3U	Samples
TL431BIDCKT	ACTIVE	SC70	DCK	6	250	Green (RoHS & no Sb/Br)	CU NIPDAU	Level-1-260C-UNLIM	-40 to 85	T3U	Samples
TL431BIDCKTE4	ACTIVE	SC70	DCK	6	250	Green (RoHS & no Sb/Br)	CU NIPDAU	Level-1-260C-UNLIM	-40 to 85	T3U	Samples
TL431BIDCKTG4	ACTIVE	SC70	DCK	6	250	Green (RoHS & no Sb/Br)	CU NIPDAU	Level-1-260C-UNLIM	-40 to 85	T3U	Samples
TL431BIDE4	ACTIVE	SOIC	D	8	75	Green (RoHS & no Sb/Br)	CU NIPDAU	Level-1-260C-UNLIM	-40 to 85	Z431B	Samples
TL431BIDG4	ACTIVE	SOIC	D	8	75	Green (RoHS & no Sb/Br)	CU NIPDAU	Level-1-260C-UNLIM	-40 to 85	Z431B	Samples
TL431BIDR	ACTIVE	SOIC	D	8	2500	Green (RoHS & no Sb/Br)	CU NIPDAU	Level-1-260C-UNLIM	-40 to 85	Z431B	Samples
TL431BIDRE4	ACTIVE	SOIC	D	8	2500	Green (RoHS & no Sb/Br)	CU NIPDAU	Level-1-260C-UNLIM	-40 to 85	Z431B	Samples
TL431BIDRG4	ACTIVE	SOIC	D	8	2500	Green (RoHS & no Sb/Br)	CU NIPDAU	Level-1-260C-UNLIM	-40 to 85	Z431B	Samples
TL431BILP	ACTIVE	TO-92	LP	3	1000	Pb-Free (RoHS)	CU SN	N / A for Pkg Type	-40 to 85	Z431B	Samples
TL431BILPE3	ACTIVE	TO-92	LP	3	1000	Pb-Free (RoHS)	CU SN	N / A for Pkg Type	-40 to 85	Z431B	Samples

Orderable Device	Status (1)	Package Type	Package Drawing	Pins	Package Qty	Eco Plan (2)	Lead/Ball Finish	MSL Peak Temp (3)	Op Temp (°C)	Top-Side Markings (4)	Samples
TL431BILPR	ACTIVE	TO-92	LP	3	2000	Pb-Free (RoHS)	CU SN	N / A for Pkg Type	-40 to 85	Z431B	Samples
TL431BILPRE3	ACTIVE	TO-92	LP	3	2000	Pb-Free (RoHS)	CU SN	N / A for Pkg Type	-40 to 85	Z431B	Samples
TL431BIP	ACTIVE	PDIP	P	8	50	Pb-Free (RoHS)	CU NIPDAU	N / A for Pkg Type	-40 to 85	TL431BIP	Samples
TL431BIPE4	ACTIVE	PDIP	P	8	50	Pb-Free (RoHS)	CU NIPDAU	N / A for Pkg Type	-40 to 85	TL431BIP	Samples
TL431BIPK	ACTIVE	SOT-89	PK	3	1000	Green (RoHS & no Sb/Br)	CU SN	Level-2-260C-1 YEAR	-40 to 85	4I	Samples
TL431BIPKG3	ACTIVE	SOT-89	PK	3	1000	Green (RoHS & no Sb/Br)	CU SN	Level-2-260C-1 YEAR	-40 to 85	4I	Samples
TL431BQD	ACTIVE	SOIC	D	8	75	Green (RoHS & no Sb/Br)	CU NIPDAU	Level-1-260C-UNLIM	-40 to 125	T431BQ	Samples
TL431BQDBVR	ACTIVE	SOT-23	DBV	5	3000	Green (RoHS & no Sb/Br)	CU NIPDAU	Level-1-260C-UNLIM	-40 to 125	(T3H3, T3HU)	Samples
TL431BQDBVRE4	ACTIVE	SOT-23	DBV	5	3000	Green (RoHS & no Sb/Br)	CU NIPDAU	Level-1-260C-UNLIM	-40 to 125	(T3H3, T3HU)	Samples
TL431BQDBVRG4	ACTIVE	SOT-23	DBV	5	3000	Green (RoHS & no Sb/Br)	CU NIPDAU	Level-1-260C-UNLIM	-40 to 125	(T3H3, T3HU)	Samples
TL431BQDBVT	ACTIVE	SOT-23	DBV	5	250	Green (RoHS & no Sb/Br)	CU NIPDAU	Level-1-260C-UNLIM	-40 to 125	(T3H3, T3HU)	Samples
TL431BQDBVTE4	ACTIVE	SOT-23	DBV	5	250	Green (RoHS & no Sb/Br)	CU NIPDAU	Level-1-260C-UNLIM	-40 to 125	(T3H3, T3HU)	Samples
TL431BQDBVTG4	ACTIVE	SOT-23	DBV	5	250	Green (RoHS & no Sb/Br)	CU NIPDAU	Level-1-260C-UNLIM	-40 to 125	(T3H3, T3HU)	Samples
TL431BQDBZR	ACTIVE	SOT-23	DBZ	3	3000	Green (RoHS & no Sb/Br)	CU NIPDAU	Level-1-260C-UNLIM	-40 to 125	(T3H3, T3HS, T3HU)	Samples
TL431BQDBZRG4	ACTIVE	SOT-23	DBZ	3	3000	Green (RoHS & no Sb/Br)	CU NIPDAU	Level-1-260C-UNLIM	-40 to 125	(T3H3, T3HS, T3HU)	Samples
TL431BQDBZT	ACTIVE	SOT-23	DBZ	3	250	Green (RoHS & no Sb/Br)	CU NIPDAU	Level-1-260C-UNLIM	-40 to 125	(T3HS, T3HU)	Samples
TL431BQDBZTG4	ACTIVE	SOT-23	DBZ	3	250	Green (RoHS & no Sb/Br)	CU NIPDAU	Level-1-260C-UNLIM	-40 to 125	(T3HS, T3HU)	Samples
TL431BQDCKR	ACTIVE	SC70	DCK	6	3000	Green (RoHS & no Sb/Br)	CU NIPDAU	Level-1-260C-UNLIM	-40 to 125	T8U	Samples

Orderable Device	Status (1)	Package Type	Package Drawing	Pins	Package Qty	Eco Plan (2)	Lead/Ball Finish	MSL Peak Temp (3)	Op Temp (°C)	Top-Side Markings (4)	Samples
TL431BQDCKRE4	ACTIVE	SC70	DCK	6	3000	Green (RoHS & no Sb/Br)	CU NIPDAU	Level-1-260C-UNLIM	-40 to 125	T8U	Samples
TL431BQDCKRG4	ACTIVE	SC70	DCK	6	3000	Green (RoHS & no Sb/Br)	CU NIPDAU	Level-1-260C-UNLIM	-40 to 125	T8U	Samples
TL431BQDCKT	ACTIVE	SC70	DCK	6	250	Green (RoHS & no Sb/Br)	CU NIPDAU	Level-1-260C-UNLIM	-40 to 125	T8U	Samples
TL431BQDCKTE4	ACTIVE	SC70	DCK	6	250	Green (RoHS & no Sb/Br)	CU NIPDAU	Level-1-260C-UNLIM	-40 to 125	T8U	Samples
TL431BQDCKTG4	ACTIVE	SC70	DCK	6	250	Green (RoHS & no Sb/Br)	CU NIPDAU	Level-1-260C-UNLIM	-40 to 125	T8U	Samples
TL431BQDE4	ACTIVE	SOIC	D	8	75	Green (RoHS & no Sb/Br)	CU NIPDAU	Level-1-260C-UNLIM	-40 to 125	T431BQ	Samples
TL431BQDG4	ACTIVE	SOIC	D	8	75	Green (RoHS & no Sb/Br)	CU NIPDAU	Level-1-260C-UNLIM	-40 to 125	T431BQ	Samples
TL431BQDR	ACTIVE	SOIC	D	8	2500	Green (RoHS & no Sb/Br)	CU NIPDAU	Level-1-260C-UNLIM	-40 to 125	T431BQ	Samples
TL431BQDRE4	ACTIVE	SOIC	D	8	2500	Green (RoHS & no Sb/Br)	CU NIPDAU	Level-1-260C-UNLIM	-40 to 125	T431BQ	Samples
TL431BQDRG4	ACTIVE	SOIC	D	8	2500	Green (RoHS & no Sb/Br)	CU NIPDAU	Level-1-260C-UNLIM	-40 to 125	T431BQ	Samples
TL431BQLP	ACTIVE	TO-92	LP	3	1000	Pb-Free (RoHS)	CU SN	N / A for Pkg Type	-40 to 125	T431BQ	Samples
TL431BQLPE3	ACTIVE	TO-92	LP	3	1000	Pb-Free (RoHS)	CU SN	N / A for Pkg Type	-40 to 125	T431BQ	Samples
TL431BQLPM	ACTIVE	TO-92	LP	3	2000	Pb-Free (RoHS)	CU SN	N / A for Pkg Type	-40 to 125	T431BQ	Samples
TL431BQLPME3	ACTIVE	TO-92	LP	3	2000	Pb-Free (RoHS)	CU SN	N / A for Pkg Type	-40 to 125	T431BQ	Samples
TL431BQLPR	ACTIVE	TO-92	LP	3	2000	Pb-Free (RoHS)	CU SN	N / A for Pkg Type	-40 to 125	T431BQ	Samples
TL431BQLPRE3	ACTIVE	TO-92	LP	3	2000	Pb-Free (RoHS)	CU SN	N / A for Pkg Type	-40 to 125	T431BQ	Samples
TL431BQPK	ACTIVE	SOT-89	PK	3	1000	Green (RoHS & no Sb/Br)	CU SN	Level-2-260C-1 YEAR	-40 to 125	3H	Samples
TL431BQPKG3	ACTIVE	SOT-89	PK	3	1000	Green (RoHS & no Sb/Br)	CU SN	Level-2-260C-1 YEAR	-40 to 125	3H	Samples

Orderable Device	Status (1)	Package Type	Package Drawing	Pins	Package Qty	Eco Plan (2)	Lead/Ball Finish	MSL Peak Temp (3)	Op Temp (°C)	Top-Side Markings (4)	Samples
TL431BQPSR	PREVIEW	SO	PS	8	2000	TBD	Call TI	Call TI	-40 to 125	T431BQ	
TL431CD	ACTIVE	SOIC	D	8	75	Green (RoHS & no Sb/Br)	CU NIPDAU	Level-1-260C-UNLIM	0 to 70	TL431C	Samples
TL431CDBVR	ACTIVE	SOT-23	DBV	5	3000	Green (RoHS & no Sb/Br)	CU NIPDAU	Level-1-260C-UNLIM	0 to 70	(T3C3, T3CG, T3CS)	Samples
TL431CDBVRE4	ACTIVE	SOT-23	DBV	5	3000	Green (RoHS & no Sb/Br)	CU NIPDAU	Level-1-260C-UNLIM	0 to 70	(T3C3, T3CG, T3CS)	Samples
TL431CDBVRG4	ACTIVE	SOT-23	DBV	5	3000	Green (RoHS & no Sb/Br)	CU NIPDAU	Level-1-260C-UNLIM	0 to 70	(T3C3, T3CG, T3CS)	Samples
TL431CDBVT	ACTIVE	SOT-23	DBV	5	250	Green (RoHS & no Sb/Br)	CU NIPDAU	Level-1-260C-UNLIM	0 to 70	(T3C3, T3CG, T3CS)	Samples
TL431CDBVTE4	ACTIVE	SOT-23	DBV	5	250	Green (RoHS & no Sb/Br)	CU NIPDAU	Level-1-260C-UNLIM	0 to 70	(T3C3, T3CG, T3CS)	Samples
TL431CDBVTG4	ACTIVE	SOT-23	DBV	5	250	Green (RoHS & no Sb/Br)	CU NIPDAU	Level-1-260C-UNLIM	0 to 70	(T3C3, T3CG, T3CS)	Samples
TL431CDBZR	ACTIVE	SOT-23	DBZ	3	3000	Green (RoHS & no Sb/Br)	CU NIPDAU	Level-1-260C-UNLIM	0 to 70	(T3C3, T3CS, T3CU)	Samples
TL431CDBZRG4	ACTIVE	SOT-23	DBZ	3	3000	Green (RoHS & no Sb/Br)	CU NIPDAU	Level-1-260C-UNLIM	0 to 70	(T3C3, T3CS, T3CU)	Samples
TL431CDBZT	ACTIVE	SOT-23	DBZ	3	250	Green (RoHS & no Sb/Br)	CU NIPDAU	Level-1-260C-UNLIM	0 to 70	(T3CS, T3CU)	Samples
TL431CDBZTG4	ACTIVE	SOT-23	DBZ	3	250	Green (RoHS & no Sb/Br)	CU NIPDAU	Level-1-260C-UNLIM	0 to 70	(T3CS, T3CU)	Samples
TL431CDG4	ACTIVE	SOIC	D	8	75	Green (RoHS & no Sb/Br)	CU NIPDAU	Level-1-260C-UNLIM	0 to 70	TL431C	Samples
TL431CDR	ACTIVE	SOIC	D	8	2500	Green (RoHS & no Sb/Br)	CU NIPDAU	Level-1-260C-UNLIM	0 to 70	TL431C	Samples
TL431CDRG4	ACTIVE	SOIC	D	8	2500	Green (RoHS & no Sb/Br)	CU NIPDAU	Level-1-260C-UNLIM	0 to 70	TL431C	Samples
TL431CKTPR	OBSOLETE	PFM	KTP	2		TBD	Call TI	Call TI	0 to 70		
TL431CLP	ACTIVE	TO-92	LP	3	1000	Pb-Free (RoHS)	CU SN	N / A for Pkg Type	0 to 70	TL431C	Samples
TL431CLPB-TDJ	OBSOLETE	TO-92	LP	3		TBD	Call TI	Call TI	0 to 75		
TL431CLPM	ACTIVE	TO-92	LP	3	2000	Pb-Free (RoHS)	CU SN	N / A for Pkg Type	0 to 70	TL431C	Samples

Orderable Device	Status (1)	Package Type	Package Drawing	Pins	Package Qty	Eco Plan (2)	Lead/Ball Finish	MSL Peak Temp (3)	Op Temp (°C)	Top-Side Markings (4)	Samples
TL431CLPR	ACTIVE	TO-92	LP	3	2000	Pb-Free (RoHS)	CU SN	N / A for Pkg Type	0 to 70	TL431C	Samples
TL431CP	ACTIVE	PDIP	P	8	50	Pb-Free (RoHS)	CU NIPDAU	N / A for Pkg Type	0 to 70	TL431CP	Samples
TL431CPE4	ACTIVE	PDIP	P	8	50	Pb-Free (RoHS)	CU NIPDAU	N / A for Pkg Type	0 to 70	TL431CP	Samples
TL431CPK	ACTIVE	SOT-89	PK	3	1000	Green (RoHS & no Sb/Br)	CU SN	Level-2-260C-1 YEAR	0 to 70	43	Samples
TL431CPKG3	ACTIVE	SOT-89	PK	3	1000	Green (RoHS & no Sb/Br)	CU SN	Level-2-260C-1 YEAR	0 to 70	43	Samples
TL431CPSLE	OBSOLETE	SO	PS	8		TBD	Call TI	Call TI	0 to 70		
TL431CPSR	ACTIVE	SO	PS	8	2000	Green (RoHS & no Sb/Br)	CU NIPDAU	Level-1-260C-UNLIM	0 to 70	T431	Samples
TL431CPSRG4	ACTIVE	SO	PS	8	2000	Green (RoHS & no Sb/Br)	CU NIPDAU	Level-1-260C-UNLIM	0 to 70	T431	Samples
TL431CPW	OBSOLETE	TSSOP	PW	8		TBD	Call TI	Call TI	0 to 70	T431	
TL431CPWE4	OBSOLETE	TSSOP	PW	8		TBD	Call TI	Call TI	0 to 70	T431	
TL431CPWG4	OBSOLETE	TSSOP	PW	8		TBD	Call TI	Call TI	0 to 70	T431	
TL431CPWLE	OBSOLETE	TSSOP	PW	8		TBD	Call TI	Call TI	0 to 70		
TL431CPWR	ACTIVE	TSSOP	PW	8	2000	Green (RoHS & no Sb/Br)	CU NIPDAU	Level-1-260C-UNLIM	0 to 70	T431	Samples
TL431CPWRE4	ACTIVE	TSSOP	PW	8	2000	Green (RoHS & no Sb/Br)	CU NIPDAU	Level-1-260C-UNLIM	0 to 70	T431	Samples
TL431CPWRG4	ACTIVE	TSSOP	PW	8	2000	Green (RoHS & no Sb/Br)	CU NIPDAU	Level-1-260C-UNLIM	0 to 70	T431	Samples
TL431ID	ACTIVE	SOIC	D	8	75	Green (RoHS & no Sb/Br)	CU NIPDAU	Level-1-260C-UNLIM	-40 to 85	TL431I	Samples
TL431IDBVR	ACTIVE	SOT-23	DBV	5	3000	Green (RoHS & no Sb/Br)	CU NIPDAU	Level-1-260C-UNLIM	-40 to 85	(T3I3, T3IG, T3IS)	Samples
TL431IDBVRE4	ACTIVE	SOT-23	DBV	5	3000	Green (RoHS & no Sb/Br)	CU NIPDAU	Level-1-260C-UNLIM	-40 to 85	(T3I3, T3IG, T3IS)	Samples
TL431IDBVRG4	ACTIVE	SOT-23	DBV	5	3000	Green (RoHS & no Sb/Br)	CU NIPDAU	Level-1-260C-UNLIM	-40 to 85	(T3I3, T3IG, T3IS)	Samples
TL431IDBVT	ACTIVE	SOT-23	DBV	5	250	Green (RoHS & no Sb/Br)	CU NIPDAU	Level-1-260C-UNLIM	-40 to 85	(T3I3, T3IG, T3IU)	Samples

Orderable Device	Status (1)	Package Type	Package Drawing	Pins	Package Qty	Eco Plan (2)	Lead/Ball Finish	MSL Peak Temp (3)	Op Temp (°C)	Top-Side Markings (4)	Samples
TL431IDBVTE4	ACTIVE	SOT-23	DBV	5	250	Green (RoHS & no Sb/Br)	CU NIPDAU	Level-1-260C-UNLIM	-40 to 85	(T3I3, T3IG, T3IU)	Samples
TL431IDBVTG4	ACTIVE	SOT-23	DBV	5	250	Green (RoHS & no Sb/Br)	CU NIPDAU	Level-1-260C-UNLIM	-40 to 85	(T3I3, T3IG, T3IU)	Samples
TL431IDBZR	ACTIVE	SOT-23	DBZ	3	3000	Green (RoHS & no Sb/Br)	CU NIPDAU	Level-1-260C-UNLIM	-40 to 85	(T3I3, T3IS, T3IU)	Samples
TL431IDBZRG4	ACTIVE	SOT-23	DBZ	3	3000	Green (RoHS & no Sb/Br)	CU NIPDAU	Level-1-260C-UNLIM	-40 to 85	(T3I3, T3IS, T3IU)	Samples
TL431IDBZT	ACTIVE	SOT-23	DBZ	3	250	Green (RoHS & no Sb/Br)	CU NIPDAU	Level-1-260C-UNLIM	-40 to 85	(T3IS, T3IU)	Samples
TL431IDBZTG4	ACTIVE	SOT-23	DBZ	3	250	Green (RoHS & no Sb/Br)	CU NIPDAU	Level-1-260C-UNLIM	-40 to 85	(T3IS, T3IU)	Samples
TL431IDG4	ACTIVE	SOIC	D	8	75	Green (RoHS & no Sb/Br)	CU NIPDAU	Level-1-260C-UNLIM	-40 to 85	TL431I	Samples
TL431IDR	ACTIVE	SOIC	D	8	2500	Green (RoHS & no Sb/Br)	CU NIPDAU	Level-1-260C-UNLIM	-40 to 85	TL431I	Samples
TL431IDRG4	ACTIVE	SOIC	D	8	2500	Green (RoHS & no Sb/Br)	CU NIPDAU	Level-1-260C-UNLIM	-40 to 85	TL431I	Samples
TL431ILP	ACTIVE	TO-92	LP	3	1000	Pb-Free (RoHS)	CU SN	N / A for Pkg Type	-40 to 85	TL431I	Samples
TL431ILPM	OBSOLETE	TO-92	LP	3		TBD	Call TI	Call TI	-40 to 85		
TL431ILPR	ACTIVE	TO-92	LP	3	2000	Pb-Free (RoHS)	CU SN	N / A for Pkg Type	-40 to 85	TL431I	Samples
TL431IP	ACTIVE	PDIP	P	8	50	Pb-Free (RoHS)	CU NIPDAU	N / A for Pkg Type	-40 to 85	TL431IP	Samples
TL431IPE4	ACTIVE	PDIP	P	8	50	Pb-Free (RoHS)	CU NIPDAU	N / A for Pkg Type	-40 to 85	TL431IP	Samples
TL431IPK	ACTIVE	SOT-89	PK	3	1000	Green (RoHS & no Sb/Br)	CU SN	Level-2-260C-1 YEAR	-40 to 85	3I	Samples
TL431IPKG3	ACTIVE	SOT-89	PK	3	1000	Green (RoHS & no Sb/Br)	CU SN	Level-2-260C-1 YEAR	-40 to 85	3I	Samples
TL431MFKB	OBSOLETE	LCCC	FK	20		TBD	Call TI	Call TI	-55 to 125		
TL431MJG	OBSOLETE	CDIP	JG	8		TBD	Call TI	Call TI	-55 to 125		
TL431MJGB	OBSOLETE	CDIP	JG	8		TBD	Call TI	Call TI	-55 to 125		
TL431QD	ACTIVE	SOIC	D	8	75	Green (RoHS & no Sb/Br)	CU NIPDAU	Level-1-260C-UNLIM	-40 to 125	T431Q	Samples

Orderable Device	Status (1)	Package Type	Package Drawing	Pins	Package Qty	Eco Plan (2)	Lead/Ball Finish	MSL Peak Temp (3)	Op Temp (°C)	Top-Side Markings (4)	Samples
TL431QDBVR	ACTIVE	SOT-23	DBV	5	3000	Green (RoHS & no Sb/Br)	CU NIPDAU	Level-1-260C-UNLIM	-40 to 125	(T3QG, T3QU)	Samples
TL431QDBVRE4	ACTIVE	SOT-23	DBV	5	3000	Green (RoHS & no Sb/Br)	CU NIPDAU	Level-1-260C-UNLIM	-40 to 125	(T3QG, T3QU)	Samples
TL431QDBVRG4	ACTIVE	SOT-23	DBV	5	3000	Green (RoHS & no Sb/Br)	CU NIPDAU	Level-1-260C-UNLIM	-40 to 125	(T3QG, T3QU)	Samples
TL431QDBVT	ACTIVE	SOT-23	DBV	5	250	Green (RoHS & no Sb/Br)	CU NIPDAU	Level-1-260C-UNLIM	-40 to 125	(T3QG, T3QU)	Samples
TL431QDBVTE4	ACTIVE	SOT-23	DBV	5	250	Green (RoHS & no Sb/Br)	CU NIPDAU	Level-1-260C-UNLIM	-40 to 125	(T3QG, T3QU)	Samples
TL431QDBVTG4	ACTIVE	SOT-23	DBV	5	250	Green (RoHS & no Sb/Br)	CU NIPDAU	Level-1-260C-UNLIM	-40 to 125	(T3QG, T3QU)	Samples
TL431QDBZR	ACTIVE	SOT-23	DBZ	3	3000	Green (RoHS & no Sb/Br)	CU NIPDAU	Level-1-260C-UNLIM	-40 to 125	(T3Q3, T3QS, T3QU)	Samples
TL431QDBZRG4	ACTIVE	SOT-23	DBZ	3	3000	Green (RoHS & no Sb/Br)	CU NIPDAU	Level-1-260C-UNLIM	-40 to 125	(T3Q3, T3QS, T3QU)	Samples
TL431QDBZT	ACTIVE	SOT-23	DBZ	3	250	Green (RoHS & no Sb/Br)	CU NIPDAU	Level-1-260C-UNLIM	-40 to 125	(T3QS, T3QU)	Samples
TL431QDBZTG4	ACTIVE	SOT-23	DBZ	3	250	Green (RoHS & no Sb/Br)	CU NIPDAU	Level-1-260C-UNLIM	-40 to 125	(T3QS, T3QU)	Samples
TL431QDCKR	ACTIVE	SC70	DCK	6	3000	Green (RoHS & no Sb/Br)	CU NIPDAU	Level-1-260C-UNLIM	-40 to 125	T6U	Samples
TL431QDCKRE4	ACTIVE	SC70	DCK	6	3000	Green (RoHS & no Sb/Br)	CU NIPDAU	Level-1-260C-UNLIM	-40 to 125	T6U	Samples
TL431QDCKRG4	ACTIVE	SC70	DCK	6	3000	Green (RoHS & no Sb/Br)	CU NIPDAU	Level-1-260C-UNLIM	-40 to 125	T6U	Samples
TL431QDCKT	ACTIVE	SC70	DCK	6	250	Green (RoHS & no Sb/Br)	CU NIPDAU	Level-1-260C-UNLIM	-40 to 125	T6U	Samples
TL431QDCKTE4	ACTIVE	SC70	DCK	6	250	Green (RoHS & no Sb/Br)	CU NIPDAU	Level-1-260C-UNLIM	-40 to 125	T6U	Samples
TL431QDCKTG4	ACTIVE	SC70	DCK	6	250	Green (RoHS & no Sb/Br)	CU NIPDAU	Level-1-260C-UNLIM	-40 to 125	T6U	Samples
TL431QDE4	ACTIVE	SOIC	D	8	75	Green (RoHS & no Sb/Br)	CU NIPDAU	Level-1-260C-UNLIM	-40 to 125	T431Q	Samples
TL431QDG4	ACTIVE	SOIC	D	8	75	Green (RoHS & no Sb/Br)	CU NIPDAU	Level-1-260C-UNLIM	-40 to 125	T431Q	Samples

Orderable Device	Status (1)	Package Type	Package Drawing	Pins	Package Qty	Eco Plan (2)	Lead/Ball Finish	MSL Peak Temp (3)	Op Temp (°C)	Top-Side Markings (4)	Samples
TL431QDR	ACTIVE	SOIC	D	8	2500	Green (RoHS & no Sb/Br)	CU NIPDAU	Level-1-260C-UNLIM	-40 to 125	T431Q	Samples
TL431QDRE4	ACTIVE	SOIC	D	8	2500	Green (RoHS & no Sb/Br)	CU NIPDAU	Level-1-260C-UNLIM	-40 to 125	T431Q	Samples
TL431QDRG4	ACTIVE	SOIC	D	8	2500	Green (RoHS & no Sb/Br)	CU NIPDAU	Level-1-260C-UNLIM	-40 to 125	T431Q	Samples
TL431QPK	ACTIVE	SOT-89	PK	3	1000	Green (RoHS & no Sb/Br)	CU SN	Level-2-260C-1 YEAR	-40 to 125	3Q	Samples
TL431QPKG3	ACTIVE	SOT-89	PK	3	1000	Green (RoHS & no Sb/Br)	CU SN	Level-2-260C-1 YEAR	-40 to 125	3Q	Samples
TL432ACDBVR	ACTIVE	SOT-23	DBV	5	3000	Green (RoHS & no Sb/Br)	CU NIPDAU	Level-1-260C-UNLIM	0 to 70	(T4BG, T4BU)	Samples
TL432ACDBVRE4	ACTIVE	SOT-23	DBV	5	3000	Green (RoHS & no Sb/Br)	CU NIPDAU	Level-1-260C-UNLIM	0 to 70	(T4BG, T4BU)	Samples
TL432ACDBVRG4	ACTIVE	SOT-23	DBV	5	3000	Green (RoHS & no Sb/Br)	CU NIPDAU	Level-1-260C-UNLIM	0 to 70	(T4BG, T4BU)	Samples
TL432ACDBZR	ACTIVE	SOT-23	DBZ	3	3000	Green (RoHS & no Sb/Br)	CU NIPDAU	Level-1-260C-UNLIM	0 to 70	(T4B3, T4BS, T4BU)	Samples
TL432ACDBZRG4	ACTIVE	SOT-23	DBZ	3	3000	Green (RoHS & no Sb/Br)	CU NIPDAU	Level-1-260C-UNLIM	0 to 70	(T4B3, T4BS, T4BU)	Samples
TL432ACDBZT	ACTIVE	SOT-23	DBZ	3	250	Green (RoHS & no Sb/Br)	CU NIPDAU	Level-1-260C-UNLIM	0 to 70	(T4BS, T4BU)	Samples
TL432ACDBZTG4	ACTIVE	SOT-23	DBZ	3	250	Green (RoHS & no Sb/Br)	CU NIPDAU	Level-1-260C-UNLIM	0 to 70	(T4BS, T4BU)	Samples
TL432AIDBVR	ACTIVE	SOT-23	DBV	5	3000	Green (RoHS & no Sb/Br)	CU NIPDAU	Level-1-260C-UNLIM	-40 to 85	(T4AG, T4AU)	Samples
TL432AIDBVRE4	ACTIVE	SOT-23	DBV	5	3000	Green (RoHS & no Sb/Br)	CU NIPDAU	Level-1-260C-UNLIM	-40 to 85	(T4AG, T4AU)	Samples
TL432AIDBVRG4	ACTIVE	SOT-23	DBV	5	3000	Green (RoHS & no Sb/Br)	CU NIPDAU	Level-1-260C-UNLIM	-40 to 85	(T4AG, T4AU)	Samples
TL432AIDBZR	ACTIVE	SOT-23	DBZ	3	3000	Green (RoHS & no Sb/Br)	CU NIPDAU	Level-1-260C-UNLIM	-40 to 85	(T4A3, T4AS, T4AU)	Samples
TL432AIDBZRG4	ACTIVE	SOT-23	DBZ	3	3000	Green (RoHS & no Sb/Br)	CU NIPDAU	Level-1-260C-UNLIM	-40 to 85	(T4A3, T4AS, T4AU)	Samples
TL432AIDBZT	ACTIVE	SOT-23	DBZ	3	250	Green (RoHS & no Sb/Br)	CU NIPDAU	Level-1-260C-UNLIM	-40 to 85	(T4A3, T4AS, T4AU)	Samples

Orderable Device	Status (1)	Package Type	Package Drawing	Pins	Package Qty	Eco Plan (2)	Lead/Ball Finish	MSL Peak Temp (3)	Op Temp (°C)	Top-Side Markings (4)	Samples
TL432AIDBZTG4	ACTIVE	SOT-23	DBZ	3	250	Green (RoHS & no Sb/Br)	CU NIPDAU	Level-1-260C-UNLIM	-40 to 85	(T4A3, T4AS, T4AU)	Samples
TL432AIPK	ACTIVE	SOT-89	PK	3	1000	Green (RoHS & no Sb/Br)	CU SN	Level-2-260C-1 YEAR	-40 to 85	2E	Samples
TL432AIPKG3	ACTIVE	SOT-89	PK	3	1000	Green (RoHS & no Sb/Br)	CU SN	Level-2-260C-1 YEAR	-40 to 85	2E	Samples
TL432AQDBVR	ACTIVE	SOT-23	DBV	5	3000	Green (RoHS & no Sb/Br)	CU NIPDAU	Level-1-260C-UNLIM	-40 to 125	T4DU	Samples
TL432AQDBVRE4	ACTIVE	SOT-23	DBV	5	3000	Green (RoHS & no Sb/Br)	CU NIPDAU	Level-1-260C-UNLIM	-40 to 125	T4DU	Samples
TL432AQDBVRG4	ACTIVE	SOT-23	DBV	5	3000	Green (RoHS & no Sb/Br)	CU NIPDAU	Level-1-260C-UNLIM	-40 to 125	T4DU	Samples
TL432AQDBVT	ACTIVE	SOT-23	DBV	5	250	Green (RoHS & no Sb/Br)	CU NIPDAU	Level-1-260C-UNLIM	-40 to 125	T4DU	Samples
TL432AQDBVTE4	ACTIVE	SOT-23	DBV	5	250	Green (RoHS & no Sb/Br)	CU NIPDAU	Level-1-260C-UNLIM	-40 to 125	T4DU	Samples
TL432AQDBVTG4	ACTIVE	SOT-23	DBV	5	250	Green (RoHS & no Sb/Br)	CU NIPDAU	Level-1-260C-UNLIM	-40 to 125	T4DU	Samples
TL432AQDBZR	ACTIVE	SOT-23	DBZ	3	3000	Green (RoHS & no Sb/Br)	CU NIPDAU	Level-1-260C-UNLIM	-40 to 125	(T4D3, T4DS, T4DU)	Samples
TL432AQDBZRG4	ACTIVE	SOT-23	DBZ	3	3000	Green (RoHS & no Sb/Br)	CU NIPDAU	Level-1-260C-UNLIM	-40 to 125	(T4D3, T4DS, T4DU)	Samples
TL432AQDBZT	ACTIVE	SOT-23	DBZ	3	250	Green (RoHS & no Sb/Br)	CU NIPDAU	Level-1-260C-UNLIM	-40 to 125	(T4DS, T4DU)	Samples
TL432AQDBZTG4	ACTIVE	SOT-23	DBZ	3	250	Green (RoHS & no Sb/Br)	CU NIPDAU	Level-1-260C-UNLIM	-40 to 125	(T4DS, T4DU)	Samples
TL432AQPK	ACTIVE	SOT-89	PK	3	1000	Green (RoHS & no Sb/Br)	CU SN	Level-2-260C-1 YEAR	-40 to 125	2F	Samples
TL432AQPKG3	ACTIVE	SOT-89	PK	3	1000	Green (RoHS & no Sb/Br)	CU SN	Level-2-260C-1 YEAR	-40 to 125	2F	Samples
TL432BCDBVR	ACTIVE	SOT-23	DBV	5	3000	Green (RoHS & no Sb/Br)	CU NIPDAU	Level-1-260C-UNLIM	0 to 70	(TBC3, TBCU)	Samples
TL432BCDBVRE4	ACTIVE	SOT-23	DBV	5	3000	Green (RoHS & no Sb/Br)	CU NIPDAU	Level-1-260C-UNLIM	0 to 70	(TBC3, TBCU)	Samples
TL432BCDBVRG4	ACTIVE	SOT-23	DBV	5	3000	Green (RoHS & no Sb/Br)	CU NIPDAU	Level-1-260C-UNLIM	0 to 70	(TBC3, TBCU)	Samples

Orderable Device	Status (1)	Package Type	Package Drawing	Pins	Package Qty	Eco Plan (2)	Lead/Ball Finish	MSL Peak Temp (3)	Op Temp (°C)	Top-Side Markings (4)	Samples
TL432BCDBZR	ACTIVE	SOT-23	DBZ	3	3000	Green (RoHS & no Sb/Br)	CU NIPDAU	Level-1-260C-UNLIM	0 to 70	(TBCS, TBCU)	Samples
TL432BCDBZRG4	ACTIVE	SOT-23	DBZ	3	3000	Green (RoHS & no Sb/Br)	CU NIPDAU	Level-1-260C-UNLIM	0 to 70	(TBCS, TBCU)	Samples
TL432BCDBZT	ACTIVE	SOT-23	DBZ	3	250	Green (RoHS & no Sb/Br)	CU NIPDAU	Level-1-260C-UNLIM	0 to 70	(TBCS, TBCU)	Samples
TL432BCDBZTG4	ACTIVE	SOT-23	DBZ	3	250	Green (RoHS & no Sb/Br)	CU NIPDAU	Level-1-260C-UNLIM	0 to 70	(TBCS, TBCU)	Samples
TL432BCPK	ACTIVE	SOT-89	PK	3	1000	Green (RoHS & no Sb/Br)	CU SN	Level-2-260C-1 YEAR	0 to 70	2G	Samples
TL432BCPKG3	ACTIVE	SOT-89	PK	3	1000	Green (RoHS & no Sb/Br)	CU SN	Level-2-260C-1 YEAR	0 to 70	2G	Samples
TL432BIDBZR	ACTIVE	SOT-23	DBZ	3	3000	Green (RoHS & no Sb/Br)	CU NIPDAU	Level-1-260C-UNLIM	-40 to 85	(T4F3, T4FS, T4FU)	Samples
TL432BIDBZRG4	ACTIVE	SOT-23	DBZ	3	3000	Green (RoHS & no Sb/Br)	CU NIPDAU	Level-1-260C-UNLIM	-40 to 85	(T4F3, T4FS, T4FU)	Samples
TL432BIDBZT	ACTIVE	SOT-23	DBZ	3	250	Green (RoHS & no Sb/Br)	CU NIPDAU	Level-1-260C-UNLIM	-40 to 85	(T4F3, T4FS, T4FU)	Samples
TL432BIDBZTG4	ACTIVE	SOT-23	DBZ	3	250	Green (RoHS & no Sb/Br)	CU NIPDAU	Level-1-260C-UNLIM	-40 to 85	(T4F3, T4FS, T4FU)	Samples
TL432BIPK	ACTIVE	SOT-89	PK	3	1000	Green (RoHS & no Sb/Br)	CU SN	Level-2-260C-1 YEAR	-40 to 85	2H	Samples
TL432BIPKG3	ACTIVE	SOT-89	PK	3	1000	Green (RoHS & no Sb/Br)	CU SN	Level-2-260C-1 YEAR	-40 to 85	2H	Samples
TL432BQDBZR	ACTIVE	SOT-23	DBZ	3	3000	Green (RoHS & no Sb/Br)	CU NIPDAU	Level-1-260C-UNLIM	-40 to 125	(T4H3, T4HS, T4HU)	Samples
TL432BQDBZRG4	ACTIVE	SOT-23	DBZ	3	3000	Green (RoHS & no Sb/Br)	CU NIPDAU	Level-1-260C-UNLIM	-40 to 125	(T4H3, T4HS, T4HU)	Samples
TL432BQDBZT	PREVIEW	SOT-23	DBZ	3	250	TBD	Call TI	Call TI	-40 to 125		
TL432BQPK	ACTIVE	SOT-89	PK	3	1000	Green (RoHS & no Sb/Br)	CU SN	Level-2-260C-1 YEAR	-40 to 125	2J	Samples
TL432BQPKG3	ACTIVE	SOT-89	PK	3	1000	Green (RoHS & no Sb/Br)	CU SN	Level-2-260C-1 YEAR	-40 to 125	2J	Samples
TL432CDBVR	ACTIVE	SOT-23	DBV	5	3000	Green (RoHS & no Sb/Br)	CU NIPDAU	Level-1-260C-UNLIM	0 to 70	(T4CG, T4CU)	Samples

Orderable Device	Status (1)	Package Type	Package Drawing	Pins	Package Qty	Eco Plan (2)	Lead/Ball Finish	MSL Peak Temp (3)	Op Temp (°C)	Top-Side Markings (4)	Samples
TL432CDBVRE4	ACTIVE	SOT-23	DBV	5	3000	Green (RoHS & no Sb/Br)	CU NIPDAU	Level-1-260C-UNLIM	0 to 70	(T4CG, T4CU)	Samples
TL432CDBVRG4	ACTIVE	SOT-23	DBV	5	3000	Green (RoHS & no Sb/Br)	CU NIPDAU	Level-1-260C-UNLIM	0 to 70	(T4CG, T4CU)	Samples
TL432CDBZR	ACTIVE	SOT-23	DBZ	3	3000	Green (RoHS & no Sb/Br)	CU NIPDAU	Level-1-260C-UNLIM	0 to 70	(T4CS, T4CU)	Samples
TL432CDBZRG4	ACTIVE	SOT-23	DBZ	3	3000	Green (RoHS & no Sb/Br)	CU NIPDAU	Level-1-260C-UNLIM	0 to 70	(T4CS, T4CU)	Samples
TL432CDBZT	ACTIVE	SOT-23	DBZ	3	250	Green (RoHS & no Sb/Br)	CU NIPDAU	Level-1-260C-UNLIM	0 to 70	(T4CS, T4CU)	Samples
TL432CDBZTG4	ACTIVE	SOT-23	DBZ	3	250	Green (RoHS & no Sb/Br)	CU NIPDAU	Level-1-260C-UNLIM	0 to 70	(T4CS, T4CU)	Samples
TL432CPK	ACTIVE	SOT-89	PK	3	1000	Green (RoHS & no Sb/Br)	CU SN	Level-2-260C-1 YEAR	0 to 70	2A	Samples
TL432CPKG3	ACTIVE	SOT-89	PK	3	1000	Green (RoHS & no Sb/Br)	CU SN	Level-2-260C-1 YEAR	0 to 70	2A	Samples
TL432IDBVR	ACTIVE	SOT-23	DBV	5	3000	Green (RoHS & no Sb/Br)	CU NIPDAU	Level-1-260C-UNLIM	-40 to 85	(T4IG, T4IU)	Samples
TL432IDBVRE4	ACTIVE	SOT-23	DBV	5	3000	Green (RoHS & no Sb/Br)	CU NIPDAU	Level-1-260C-UNLIM	-40 to 85	(T4IG, T4IU)	Samples
TL432IDBVRG4	ACTIVE	SOT-23	DBV	5	3000	Green (RoHS & no Sb/Br)	CU NIPDAU	Level-1-260C-UNLIM	-40 to 85	(T4IG, T4IU)	Samples
TL432IDBZR	ACTIVE	SOT-23	DBZ	3	3000	Green (RoHS & no Sb/Br)	CU NIPDAU	Level-1-260C-UNLIM	-40 to 85	(T4IS, T4IU)	Samples
TL432IDBZRG4	ACTIVE	SOT-23	DBZ	3	3000	Green (RoHS & no Sb/Br)	CU NIPDAU	Level-1-260C-UNLIM	-40 to 85	(T4IS, T4IU)	Samples
TL432IDBZT	ACTIVE	SOT-23	DBZ	3	250	Green (RoHS & no Sb/Br)	CU NIPDAU	Level-1-260C-UNLIM	-40 to 85	(T4IS, T4IU)	Samples
TL432IDBZTG4	ACTIVE	SOT-23	DBZ	3	250	Green (RoHS & no Sb/Br)	CU NIPDAU	Level-1-260C-UNLIM	-40 to 85	(T4IS, T4IU)	Samples
TL432IPK	ACTIVE	SOT-89	PK	3	1000	Green (RoHS & no Sb/Br)	CU SN	Level-2-260C-1 YEAR	-40 to 85	2B	Samples
TL432IPKG3	ACTIVE	SOT-89	PK	3	1000	Green (RoHS & no Sb/Br)	CU SN	Level-2-260C-1 YEAR	-40 to 85	2B	Samples
TL432QDBVR	ACTIVE	SOT-23	DBV	5	3000	Green (RoHS & no Sb/Br)	CU NIPDAU	Level-1-260C-UNLIM	-40 to 125	T4QU	Samples

Orderable Device	Status (1)	Package Type	Package Drawing	Pins	Package Qty	Eco Plan (2)	Lead/Ball Finish	MSL Peak Temp (3)	Op Temp (°C)	Top-Side Markings (4)	Samples
TL432QDBVRE4	ACTIVE	SOT-23	DBV	5	3000	Green (RoHS & no Sb/Br)	CU NIPDAU	Level-1-260C-UNLIM	-40 to 125	T4QU	Samples
TL432QDBVRG4	ACTIVE	SOT-23	DBV	5	3000	Green (RoHS & no Sb/Br)	CU NIPDAU	Level-1-260C-UNLIM	-40 to 125	T4QU	Samples
TL432QDBZR	ACTIVE	SOT-23	DBZ	3	3000	Green (RoHS & no Sb/Br)	CU NIPDAU	Level-1-260C-UNLIM	-40 to 125	(T4QS, T4QU)	Samples
TL432QDBZRG4	ACTIVE	SOT-23	DBZ	3	3000	Green (RoHS & no Sb/Br)	CU NIPDAU	Level-1-260C-UNLIM	-40 to 125	(T4QS, T4QU)	Samples
TL432QPK	ACTIVE	SOT-89	PK	3	1000	Green (RoHS & no Sb/Br)	CU SN	Level-2-260C-1 YEAR	-40 to 125	2C	Samples
TL432QPKG3	ACTIVE	SOT-89	PK	3	1000	Green (RoHS & no Sb/Br)	CU SN	Level-2-260C-1 YEAR	-40 to 125	2C	Samples

(1) The marketing status values are defined as follows:
ACTIVE: Product device recommended for new designs.
LIFEBUY: TI has announced that the device will be discontinued, and a lifetime-buy period is in effect.
NRND: Not recommended for new designs. Device is in production to support existing customers, but TI does not recommend using this part in a new design.
PREVIEW: Device has been announced but is not in production. Samples may or may not be available.
OBSOLETE: TI has discontinued the production of the device.

(2) Eco Plan - The planned eco-friendly classification: Pb-Free (RoHS), Pb-Free (RoHS Exempt), or Green (RoHS & no Sb/Br) - please check http://www.ti.com/productcontent for the latest availability information and additional product content details.
TBD: The Pb-Free/Green conversion plan has not been defined.
Pb-Free (RoHS): TI's terms "Lead-Free" or "Pb-Free" mean semiconductor products that are compatible with the current RoHS requirements for all 6 substances, including the requirement that lead not exceed 0.1% by weight in homogeneous materials. Where designed to be soldered at high temperatures, TI Pb-Free products are suitable for use in specified lead-free processes.
Pb-Free (RoHS Exempt): This component has a RoHS exemption for either 1) lead-based flip-chip solder bumps used between the die and package, or 2) lead-based die adhesive used between the die and leadframe. The component is otherwise considered Pb-Free (RoHS compatible) as defined above.
Green (RoHS & no Sb/Br): TI defines "Green" to mean Pb-Free (RoHS compatible), and free of Bromine (Br) and Antimony (Sb) based flame retardants (Br or Sb do not exceed 0.1% by weight in homogeneous material)

(3) MSL, Peak Temp. -- The Moisture Sensitivity Level rating according to the JEDEC industry standard classifications, and peak solder temperature.

(4) Only one of markings shown within the brackets will appear on the physical device.

Important Information and Disclaimer: The information provided on this page represents TI's knowledge and belief as of the date that it is provided. TI bases its knowledge and belief on information provided by third parties, and makes no representation or warranty as to the accuracy of such information. Efforts are underway to better integrate information from third parties. TI has taken and continues to take reasonable steps to provide representative and accurate information but may not have conducted destructive testing or chemical analysis on incoming materials and chemicals. TI and TI suppliers consider certain information to be proprietary, and thus CAS numbers and other limited information may not be available for release.

In no event shall TI's liability arising out of such information exceed the total purchase price of the TI part(s) at issue in this document sold by TI to Customer on an annual basis.

OTHER QUALIFIED VERSIONS OF TL431A, TL431B, TL432A, TL432B :

- Automotive: TL431A-Q1, TL431B-Q1, TL432A-Q1, TL432B-Q1

NOTE: Qualified Version Definitions:

- Automotive - Q100 devices qualified for high-reliability automotive applications targeting zero defects

TAPE AND REEL INFORMATION

REEL DIMENSIONS

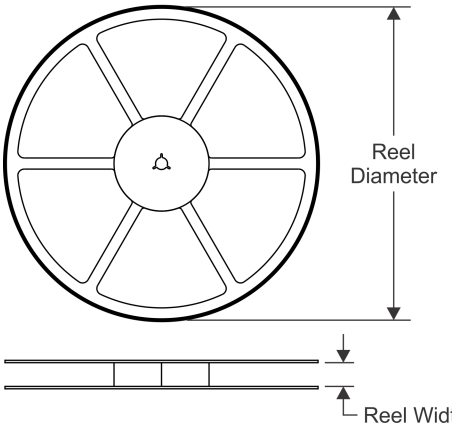

TAPE DIMENSIONS

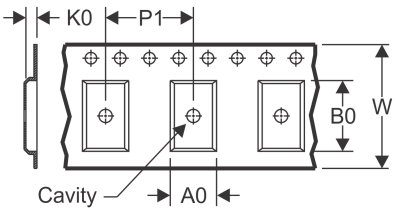

A0	Dimension designed to accommodate the component width
B0	Dimension designed to accommodate the component length
K0	Dimension designed to accommodate the component thickness
W	Overall width of the carrier tape
P1	Pitch between successive cavity centers

QUADRANT ASSIGNMENTS FOR PIN 1 ORIENTATION IN TAPE

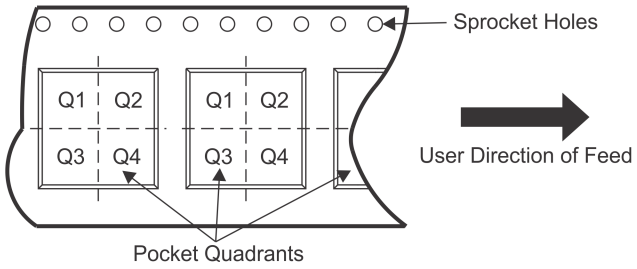

*All dimensions are nominal

Device	Package Type	Package Drawing	Pins	SPQ	Reel Diameter (mm)	Reel Width W1 (mm)	A0 (mm)	B0 (mm)	K0 (mm)	P1 (mm)	W (mm)	Pin1 Quadrant
TL431ACDBVR	SOT-23	DBV	5	3000	178.0	9.0	3.23	3.17	1.37	4.0	8.0	Q3
TL431ACDBVT	SOT-23	DBV	5	250	178.0	9.0	3.23	3.17	1.37	4.0	8.0	Q3
TL431ACDBZR	SOT-23	DBZ	3	3000	178.0	9.2	3.08	2.8	1.27	4.0	8.0	Q3
TL431ACDBZT	SOT-23	DBZ	3	250	178.0	9.2	3.08	2.8	1.27	4.0	8.0	Q3
TL431ACDCKR	SC70	DCK	6	3000	180.0	8.4	2.25	2.4	1.22	4.0	8.0	Q3
TL431ACDCKT	SC70	DCK	6	250	179.0	8.4	2.2	2.5	1.2	4.0	8.0	Q3
TL431ACDR	SOIC	D	8	2500	330.0	12.4	6.4	5.2	2.1	8.0	12.0	Q1
TL431ACPK	SOT-89	PK	3	1000	180.0	12.4	4.91	4.52	1.9	8.0	12.0	Q3
TL431ACPSR	SO	PS	8	2000	330.0	16.4	8.2	6.6	2.5	12.0	16.0	Q1
TL431AIDBVR	SOT-23	DBV	5	3000	178.0	9.0	3.23	3.17	1.37	4.0	8.0	Q3
TL431AIDBVT	SOT-23	DBV	5	250	178.0	9.0	3.23	3.17	1.37	4.0	8.0	Q3
TL431AIDBZR	SOT-23	DBZ	3	3000	178.0	9.2	3.08	2.8	1.27	4.0	8.0	Q3
TL431AIDBZT	SOT-23	DBZ	3	250	178.0	9.2	3.08	2.8	1.27	4.0	8.0	Q3
TL431AIDCKR	SC70	DCK	6	3000	179.0	8.4	2.2	2.5	1.2	4.0	8.0	Q3
TL431AIDCKT	SC70	DCK	6	250	179.0	8.4	2.2	2.5	1.2	4.0	8.0	Q3
TL431AIDR	SOIC	D	8	2500	330.0	12.4	6.4	5.2	2.1	8.0	12.0	Q1
TL431AIPK	SOT-89	PK	3	1000	180.0	12.4	4.91	4.52	1.9	8.0	12.0	Q3
TL431AQDBVR	SOT-23	DBV	5	3000	178.0	9.0	3.23	3.17	1.37	4.0	8.0	Q3

Device	Package Type	Package Drawing	Pins	SPQ	Reel Diameter (mm)	Reel Width W1 (mm)	A0 (mm)	B0 (mm)	K0 (mm)	P1 (mm)	W (mm)	Pin1 Quadrant
TL431AQDBVT	SOT-23	DBV	5	250	178.0	9.0	3.23	3.17	1.37	4.0	8.0	Q3
TL431AQDBZR	SOT-23	DBZ	3	3000	179.0	8.4	3.15	2.95	1.22	4.0	8.0	Q3
TL431AQDBZR	SOT-23	DBZ	3	3000	180.0	8.4	3.15	2.77	1.22	4.0	8.0	Q3
TL431AQDBZT	SOT-23	DBZ	3	250	179.0	8.4	3.15	2.95	1.22	4.0	8.0	Q3
TL431AQDCKR	SC70	DCK	6	3000	179.0	8.4	2.2	2.5	1.2	4.0	8.0	Q3
TL431AQDCKT	SC70	DCK	6	250	179.0	8.4	2.2	2.5	1.2	4.0	8.0	Q3
TL431BCDBVR	SOT-23	DBV	5	3000	178.0	9.0	3.23	3.17	1.37	4.0	8.0	Q3
TL431BCDBVT	SOT-23	DBV	5	250	178.0	9.0	3.23	3.17	1.37	4.0	8.0	Q3
TL431BCDBZR	SOT-23	DBZ	3	3000	178.0	9.2	3.08	2.8	1.27	4.0	8.0	Q3
TL431BCDBZT	SOT-23	DBZ	3	250	178.0	9.2	3.08	2.8	1.27	4.0	8.0	Q3
TL431BCDCKR	SC70	DCK	6	3000	179.0	8.4	2.2	2.5	1.2	4.0	8.0	Q3
TL431BCDCKT	SC70	DCK	6	250	179.0	8.4	2.2	2.5	1.2	4.0	8.0	Q3
TL431BCDR	SOIC	D	8	2500	330.0	12.4	6.4	5.2	2.1	8.0	12.0	Q1
TL431BCPK	SOT-89	PK	3	1000	180.0	12.4	4.91	4.52	1.9	8.0	12.0	Q3
TL431BCPSR	SO	PS	8	2000	330.0	16.4	8.2	6.6	2.5	12.0	16.0	Q1
TL431BIDBVR	SOT-23	DBV	5	3000	179.0	8.4	3.2	3.2	1.4	4.0	8.0	Q3
TL431BIDBVR	SOT-23	DBV	5	3000	178.0	9.0	3.23	3.17	1.37	4.0	8.0	Q3
TL431BIDBVT	SOT-23	DBV	5	250	178.0	9.0	3.23	3.17	1.37	4.0	8.0	Q3
TL431BIDBZR	SOT-23	DBZ	3	3000	178.0	9.2	3.08	2.8	1.27	4.0	8.0	Q3
TL431BIDBZT	SOT-23	DBZ	3	250	178.0	9.2	3.08	2.8	1.27	4.0	8.0	Q3
TL431BIDCKR	SC70	DCK	6	3000	179.0	8.4	2.2	2.5	1.2	4.0	8.0	Q3
TL431BIDCKT	SC70	DCK	6	250	179.0	8.4	2.2	2.5	1.2	4.0	8.0	Q3
TL431BIDR	SOIC	D	8	2500	330.0	12.4	6.4	5.2	2.1	8.0	12.0	Q1
TL431BIDRG4	SOIC	D	8	2500	330.0	12.4	6.4	5.2	2.1	8.0	12.0	Q1
TL431BIPK	SOT-89	PK	3	1000	180.0	12.4	4.91	4.52	1.9	8.0	12.0	Q3
TL431BQDBVR	SOT-23	DBV	5	3000	179.0	8.4	3.2	3.2	1.4	4.0	8.0	Q3
TL431BQDBVT	SOT-23	DBV	5	250	179.0	8.4	3.2	3.2	1.4	4.0	8.0	Q3
TL431BQDBZR	SOT-23	DBZ	3	3000	179.0	8.4	3.15	2.95	1.22	4.0	8.0	Q3
TL431BQDBZT	SOT-23	DBZ	3	250	179.0	8.4	3.15	2.95	1.22	4.0	8.0	Q3
TL431BQDCKR	SC70	DCK	6	3000	179.0	8.4	2.2	2.5	1.2	4.0	8.0	Q3
TL431BQDCKT	SC70	DCK	6	250	179.0	8.4	2.2	2.5	1.2	4.0	8.0	Q3
TL431BQDR	SOIC	D	8	2500	330.0	12.4	6.4	5.2	2.1	8.0	12.0	Q1
TL431CDBVR	SOT-23	DBV	5	3000	178.0	9.0	3.23	3.17	1.37	4.0	8.0	Q3
TL431CDBVT	SOT-23	DBV	5	250	178.0	9.0	3.23	3.17	1.37	4.0	8.0	Q3
TL431CDBZR	SOT-23	DBZ	3	3000	180.0	8.4	3.15	2.77	1.22	4.0	8.0	Q3
TL431CDBZR	SOT-23	DBZ	3	3000	179.0	8.4	3.15	2.95	1.22	4.0	8.0	Q3
TL431CDBZT	SOT-23	DBZ	3	250	179.0	8.4	3.15	2.95	1.22	4.0	8.0	Q3
TL431CDR	SOIC	D	8	2500	330.0	12.4	6.4	5.2	2.1	8.0	12.0	Q1
TL431CDRG4	SOIC	D	8	2500	330.0	12.4	6.4	5.2	2.1	8.0	12.0	Q1
TL431CPK	SOT-89	PK	3	1000	180.0	12.4	4.91	4.52	1.9	8.0	12.0	Q3
TL431CPSR	SO	PS	8	2000	330.0	16.4	8.2	6.6	2.5	12.0	16.0	Q1
TL431IDBVR	SOT-23	DBV	5	3000	178.0	9.0	3.23	3.17	1.37	4.0	8.0	Q3
TL431IDBVT	SOT-23	DBV	5	250	178.0	9.0	3.23	3.17	1.37	4.0	8.0	Q3

Device	Package Type	Package Drawing	Pins	SPQ	Reel Diameter (mm)	Reel Width W1 (mm)	A0 (mm)	B0 (mm)	K0 (mm)	P1 (mm)	W (mm)	Pin1 Quadrant
TL431IDBZR	SOT-23	DBZ	3	3000	179.0	8.4	3.15	2.95	1.22	4.0	8.0	Q3
TL431IDBZR	SOT-23	DBZ	3	3000	180.0	8.4	3.15	2.77	1.22	4.0	8.0	Q3
TL431IDBZT	SOT-23	DBZ	3	250	179.0	8.4	3.15	2.95	1.22	4.0	8.0	Q3
TL431IDR	SOIC	D	8	2500	330.0	12.4	6.4	5.2	2.1	8.0	12.0	Q1
TL431IDRG4	SOIC	D	8	2500	330.0	12.4	6.4	5.2	2.1	8.0	12.0	Q1
TL431IPK	SOT-89	PK	3	1000	180.0	12.4	4.91	4.52	1.9	8.0	12.0	Q3
TL431QDBVR	SOT-23	DBV	5	3000	178.0	9.0	3.23	3.17	1.37	4.0	8.0	Q3
TL431QDBVT	SOT-23	DBV	5	250	178.0	9.0	3.23	3.17	1.37	4.0	8.0	Q3
TL431QDBZR	SOT-23	DBZ	3	3000	179.0	8.4	3.15	2.95	1.22	4.0	8.0	Q3
TL431QDBZT	SOT-23	DBZ	3	250	179.0	8.4	3.15	2.95	1.22	4.0	8.0	Q3
TL431QDCKR	SC70	DCK	6	3000	179.0	8.4	2.2	2.5	1.2	4.0	8.0	Q3
TL431QDCKT	SC70	DCK	6	250	179.0	8.4	2.2	2.5	1.2	4.0	8.0	Q3
TL431QDR	SOIC	D	8	2500	330.0	12.4	6.4	5.2	2.1	8.0	12.0	Q1
TL432ACDBVR	SOT-23	DBV	5	3000	178.0	9.0	3.23	3.17	1.37	4.0	8.0	Q3
TL432ACDBZR	SOT-23	DBZ	3	3000	179.0	8.4	3.15	2.95	1.22	4.0	8.0	Q3
TL432ACDBZT	SOT-23	DBZ	3	250	179.0	8.4	3.15	2.95	1.22	4.0	8.0	Q3
TL432AIDBVR	SOT-23	DBV	5	3000	178.0	9.0	3.23	3.17	1.37	4.0	8.0	Q3
TL432AIDBZR	SOT-23	DBZ	3	3000	178.0	9.2	3.08	2.8	1.27	4.0	8.0	Q3
TL432AIDBZT	SOT-23	DBZ	3	250	178.0	9.2	3.08	2.8	1.27	4.0	8.0	Q3
TL432AIPK	SOT-89	PK	3	1000	180.0	12.4	4.91	4.52	1.9	8.0	12.0	Q3
TL432AQDBVR	SOT-23	DBV	5	3000	179.0	8.4	3.2	3.2	1.4	4.0	8.0	Q3
TL432AQDBVT	SOT-23	DBV	5	250	179.0	8.4	3.2	3.2	1.4	4.0	8.0	Q3
TL432AQDBZR	SOT-23	DBZ	3	3000	179.0	8.4	3.15	2.95	1.22	4.0	8.0	Q3
TL432AQDBZT	SOT-23	DBZ	3	250	179.0	8.4	3.15	2.95	1.22	4.0	8.0	Q3
TL432AQPK	SOT-89	PK	3	1000	180.0	12.4	4.91	4.52	1.9	8.0	12.0	Q3
TL432BCDBVR	SOT-23	DBV	5	3000	179.0	8.4	3.2	3.2	1.4	4.0	8.0	Q3
TL432BCDBZR	SOT-23	DBZ	3	3000	179.0	8.4	3.15	2.95	1.22	4.0	8.0	Q3
TL432BCDBZT	SOT-23	DBZ	3	250	179.0	8.4	3.15	2.95	1.22	4.0	8.0	Q3
TL432BCPK	SOT-89	PK	3	1000	180.0	12.4	4.91	4.52	1.9	8.0	12.0	Q3
TL432BIDBZR	SOT-23	DBZ	3	3000	178.0	9.2	3.08	2.8	1.27	4.0	8.0	Q3
TL432BIDBZT	SOT-23	DBZ	3	250	178.0	9.2	3.08	2.8	1.27	4.0	8.0	Q3
TL432BIPK	SOT-89	PK	3	1000	180.0	12.4	4.91	4.52	1.9	8.0	12.0	Q3
TL432BQDBZR	SOT-23	DBZ	3	3000	178.0	9.2	3.08	2.8	1.27	4.0	8.0	Q3
TL432BQPK	SOT-89	PK	3	1000	180.0	12.4	4.91	4.52	1.9	8.0	12.0	Q3
TL432CDBVR	SOT-23	DBV	5	3000	178.0	9.0	3.23	3.17	1.37	4.0	8.0	Q3
TL432CDBZR	SOT-23	DBZ	3	3000	179.0	8.4	3.15	2.95	1.22	4.0	8.0	Q3
TL432CDBZT	SOT-23	DBZ	3	250	179.0	8.4	3.15	2.95	1.22	4.0	8.0	Q3
TL432CPK	SOT-89	PK	3	1000	180.0	12.4	4.91	4.52	1.9	8.0	12.0	Q3
TL432IDBVR	SOT-23	DBV	5	3000	178.0	9.0	3.23	3.17	1.37	4.0	8.0	Q3
TL432IDBZR	SOT-23	DBZ	3	3000	179.0	8.4	3.15	2.95	1.22	4.0	8.0	Q3
TL432IDBZT	SOT-23	DBZ	3	250	179.0	8.4	3.15	2.95	1.22	4.0	8.0	Q3
TL432IPK	SOT-89	PK	3	1000	180.0	12.4	4.91	4.52	1.9	8.0	12.0	Q3
TL432QDBVR	SOT-23	DBV	5	3000	179.0	8.4	3.2	3.2	1.4	4.0	8.0	Q3

Device	Package Type	Package Drawing	Pins	SPQ	Reel Diameter (mm)	Reel Width W1 (mm)	A0 (mm)	B0 (mm)	K0 (mm)	P1 (mm)	W (mm)	Pin1 Quadrant
TL432QDBZR	SOT-23	DBZ	3	3000	179.0	8.4	3.15	2.95	1.22	4.0	8.0	Q3
TL432QPK	SOT-89	PK	3	1000	180.0	12.4	4.91	4.52	1.9	8.0	12.0	Q3

TAPE AND REEL BOX DIMENSIONS

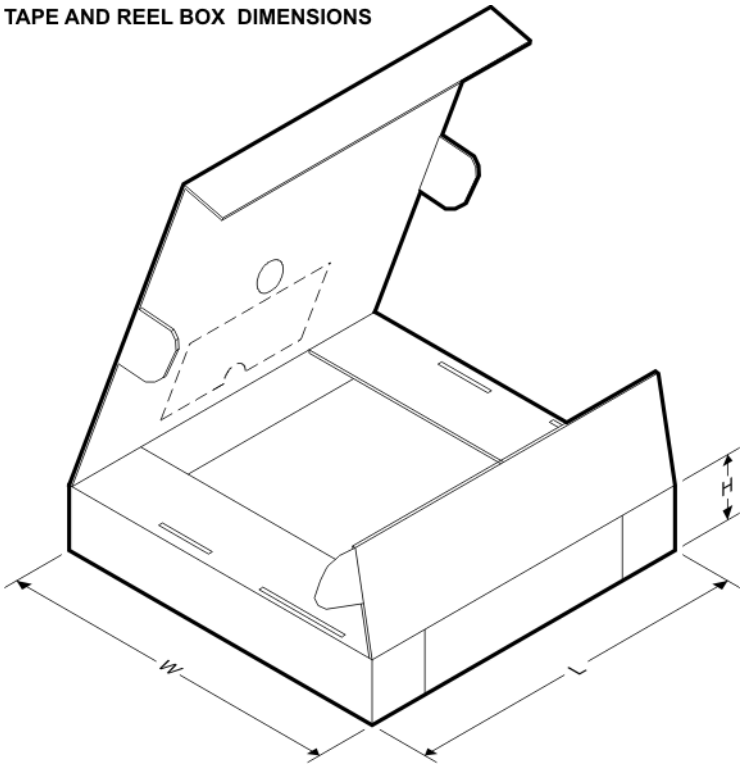

*All dimensions are nominal

Device	Package Type	Package Drawing	Pins	SPQ	Length (mm)	Width (mm)	Height (mm)
TL431ACDBVR	SOT-23	DBV	5	3000	180.0	180.0	18.0
TL431ACDBVT	SOT-23	DBV	5	250	180.0	180.0	18.0
TL431ACDBZR	SOT-23	DBZ	3	3000	180.0	180.0	18.0
TL431ACDBZT	SOT-23	DBZ	3	250	180.0	180.0	18.0
TL431ACDCKR	SC70	DCK	6	3000	202.0	201.0	28.0
TL431ACDCKT	SC70	DCK	6	250	203.0	203.0	35.0
TL431ACDR	SOIC	D	8	2500	340.5	338.1	20.6
TL431ACPK	SOT-89	PK	3	1000	340.0	340.0	38.0
TL431ACPSR	SO	PS	8	2000	367.0	367.0	38.0
TL431AIDBVR	SOT-23	DBV	5	3000	180.0	180.0	18.0
TL431AIDBVT	SOT-23	DBV	5	250	180.0	180.0	18.0
TL431AIDBZR	SOT-23	DBZ	3	3000	180.0	180.0	18.0
TL431AIDBZT	SOT-23	DBZ	3	250	180.0	180.0	18.0
TL431AIDCKR	SC70	DCK	6	3000	203.0	203.0	35.0
TL431AIDCKT	SC70	DCK	6	250	203.0	203.0	35.0

Device	Package Type	Package Drawing	Pins	SPQ	Length (mm)	Width (mm)	Height (mm)
TL431AIDR	SOIC	D	8	2500	340.5	338.1	20.6
TL431AIPK	SOT-89	PK	3	1000	340.0	340.0	38.0
TL431AQDBVR	SOT-23	DBV	5	3000	180.0	180.0	18.0
TL431AQDBVT	SOT-23	DBV	5	250	180.0	180.0	18.0
TL431AQDBZR	SOT-23	DBZ	3	3000	203.0	203.0	35.0
TL431AQDBZR	SOT-23	DBZ	3	3000	202.0	201.0	28.0
TL431AQDBZT	SOT-23	DBZ	3	250	203.0	203.0	35.0
TL431AQDCKR	SC70	DCK	6	3000	203.0	203.0	35.0
TL431AQDCKT	SC70	DCK	6	250	203.0	203.0	35.0
TL431BCDBVR	SOT-23	DBV	5	3000	180.0	180.0	18.0
TL431BCDBVT	SOT-23	DBV	5	250	180.0	180.0	18.0
TL431BCDBZR	SOT-23	DBZ	3	3000	180.0	180.0	18.0
TL431BCDBZT	SOT-23	DBZ	3	250	180.0	180.0	18.0
TL431BCDCKR	SC70	DCK	6	3000	203.0	203.0	35.0
TL431BCDCKT	SC70	DCK	6	250	203.0	203.0	35.0
TL431BCDR	SOIC	D	8	2500	340.5	338.1	20.6
TL431BCPK	SOT-89	PK	3	1000	340.0	340.0	38.0
TL431BCPSR	SO	PS	8	2000	367.0	367.0	38.0
TL431BIDBVR	SOT-23	DBV	5	3000	203.0	203.0	35.0
TL431BIDBVR	SOT-23	DBV	5	3000	180.0	180.0	18.0
TL431BIDBVT	SOT-23	DBV	5	250	180.0	180.0	18.0
TL431BIDBZR	SOT-23	DBZ	3	3000	180.0	180.0	18.0
TL431BIDBZT	SOT-23	DBZ	3	250	180.0	180.0	18.0
TL431BIDCKR	SC70	DCK	6	3000	203.0	203.0	35.0
TL431BIDCKT	SC70	DCK	6	250	203.0	203.0	35.0
TL431BIDR	SOIC	D	8	2500	340.5	338.1	20.6
TL431BIDRG4	SOIC	D	8	2500	340.5	338.1	20.6
TL431BIPK	SOT-89	PK	3	1000	340.0	340.0	38.0
TL431BQDBVR	SOT-23	DBV	5	3000	203.0	203.0	35.0
TL431BQDBVT	SOT-23	DBV	5	250	203.0	203.0	35.0
TL431BQDBZR	SOT-23	DBZ	3	3000	203.0	203.0	35.0
TL431BQDBZT	SOT-23	DBZ	3	250	203.0	203.0	35.0
TL431BQDCKR	SC70	DCK	6	3000	203.0	203.0	35.0
TL431BQDCKT	SC70	DCK	6	250	203.0	203.0	35.0
TL431BQDR	SOIC	D	8	2500	340.5	338.1	20.6
TL431CDBVR	SOT-23	DBV	5	3000	180.0	180.0	18.0
TL431CDBVT	SOT-23	DBV	5	250	180.0	180.0	18.0
TL431CDBZR	SOT-23	DBZ	3	3000	202.0	201.0	28.0
TL431CDBZR	SOT-23	DBZ	3	3000	203.0	203.0	35.0
TL431CDBZT	SOT-23	DBZ	3	250	203.0	203.0	35.0
TL431CDR	SOIC	D	8	2500	340.5	338.1	20.6
TL431CDRG4	SOIC	D	8	2500	340.5	338.1	20.6
TL431CPK	SOT-89	PK	3	1000	340.0	340.0	38.0
TL431CPSR	SO	PS	8	2000	367.0	367.0	38.0

Device	Package Type	Package Drawing	Pins	SPQ	Length (mm)	Width (mm)	Height (mm)
TL431IDBVR	SOT-23	DBV	5	3000	180.0	180.0	18.0
TL431IDBVT	SOT-23	DBV	5	250	180.0	180.0	18.0
TL431IDBZR	SOT-23	DBZ	3	3000	203.0	203.0	35.0
TL431IDBZR	SOT-23	DBZ	3	3000	202.0	201.0	28.0
TL431IDBZT	SOT-23	DBZ	3	250	203.0	203.0	35.0
TL431IDR	SOIC	D	8	2500	340.5	338.1	20.6
TL431IDRG4	SOIC	D	8	2500	340.5	338.1	20.6
TL431IPK	SOT-89	PK	3	1000	340.0	340.0	38.0
TL431QDBVR	SOT-23	DBV	5	3000	180.0	180.0	18.0
TL431QDBVT	SOT-23	DBV	5	250	180.0	180.0	18.0
TL431QDBZR	SOT-23	DBZ	3	3000	203.0	203.0	35.0
TL431QDBZT	SOT-23	DBZ	3	250	203.0	203.0	35.0
TL431QDCKR	SC70	DCK	6	3000	203.0	203.0	35.0
TL431QDCKT	SC70	DCK	6	250	203.0	203.0	35.0
TL431QDR	SOIC	D	8	2500	340.5	338.1	20.6
TL432ACDBVR	SOT-23	DBV	5	3000	180.0	180.0	18.0
TL432ACDBZR	SOT-23	DBZ	3	3000	203.0	203.0	35.0
TL432ACDBZT	SOT-23	DBZ	3	250	203.0	203.0	35.0
TL432AIDBVR	SOT-23	DBV	5	3000	180.0	180.0	18.0
TL432AIDBZR	SOT-23	DBZ	3	3000	180.0	180.0	18.0
TL432AIDBZT	SOT-23	DBZ	3	250	180.0	180.0	18.0
TL432AIPK	SOT-89	PK	3	1000	340.0	340.0	38.0
TL432AQDBVR	SOT-23	DBV	5	3000	203.0	203.0	35.0
TL432AQDBVT	SOT-23	DBV	5	250	203.0	203.0	35.0
TL432AQDBZR	SOT-23	DBZ	3	3000	203.0	203.0	35.0
TL432AQDBZT	SOT-23	DBZ	3	250	203.0	203.0	35.0
TL432AQPK	SOT-89	PK	3	1000	340.0	340.0	38.0
TL432BCDBVR	SOT-23	DBV	5	3000	203.0	203.0	35.0
TL432BCDBZR	SOT-23	DBZ	3	3000	203.0	203.0	35.0
TL432BCDBZT	SOT-23	DBZ	3	250	203.0	203.0	35.0
TL432BCPK	SOT-89	PK	3	1000	340.0	340.0	38.0
TL432BIDBZR	SOT-23	DBZ	3	3000	180.0	180.0	18.0
TL432BIDBZT	SOT-23	DBZ	3	250	180.0	180.0	18.0
TL432BIPK	SOT-89	PK	3	1000	340.0	340.0	38.0
TL432BQDBZR	SOT-23	DBZ	3	3000	180.0	180.0	18.0
TL432BQPK	SOT-89	PK	3	1000	340.0	340.0	38.0
TL432CDBVR	SOT-23	DBV	5	3000	180.0	180.0	18.0
TL432CDBZR	SOT-23	DBZ	3	3000	203.0	203.0	35.0
TL432CDBZT	SOT-23	DBZ	3	250	203.0	203.0	35.0
TL432CPK	SOT-89	PK	3	1000	340.0	340.0	38.0
TL432IDBVR	SOT-23	DBV	5	3000	180.0	180.0	18.0
TL432IDBZR	SOT-23	DBZ	3	3000	203.0	203.0	35.0
TL432IDBZT	SOT-23	DBZ	3	250	203.0	203.0	35.0
TL432IPK	SOT-89	PK	3	1000	340.0	340.0	38.0

Device	Package Type	Package Drawing	Pins	SPQ	Length (mm)	Width (mm)	Height (mm)
TL432QDBVR	SOT-23	DBV	5	3000	203.0	203.0	35.0
TL432QDBZR	SOT-23	DBZ	3	3000	203.0	203.0	35.0
TL432QPK	SOT-89	PK	3	1000	340.0	340.0	38.0

MCER001A – JANUARY 1995 – REVISED JANUARY 1997

JG (R-GDIP-T8) **CERAMIC DUAL-IN-LINE**

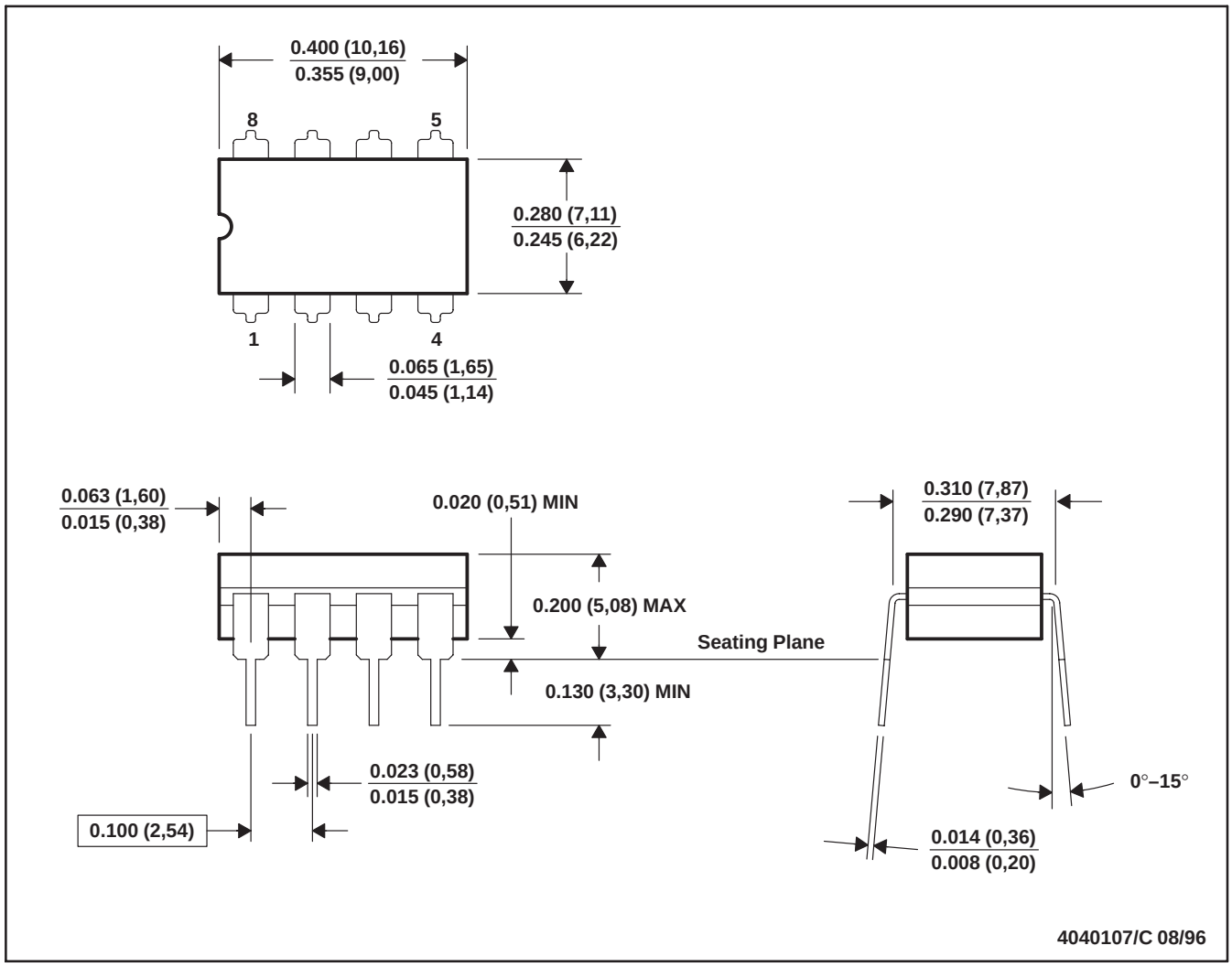

NOTES: A. All linear dimensions are in inches (millimeters).
B. This drawing is subject to change without notice.
C. This package can be hermetically sealed with a ceramic lid using glass frit.
D. Index point is provided on cap for terminal identification.
E. Falls within MIL STD 1835 GDIP1-T8

PK (R–PSSO–F3) PLASTIC SINGLE–IN–LINE PACKAGE

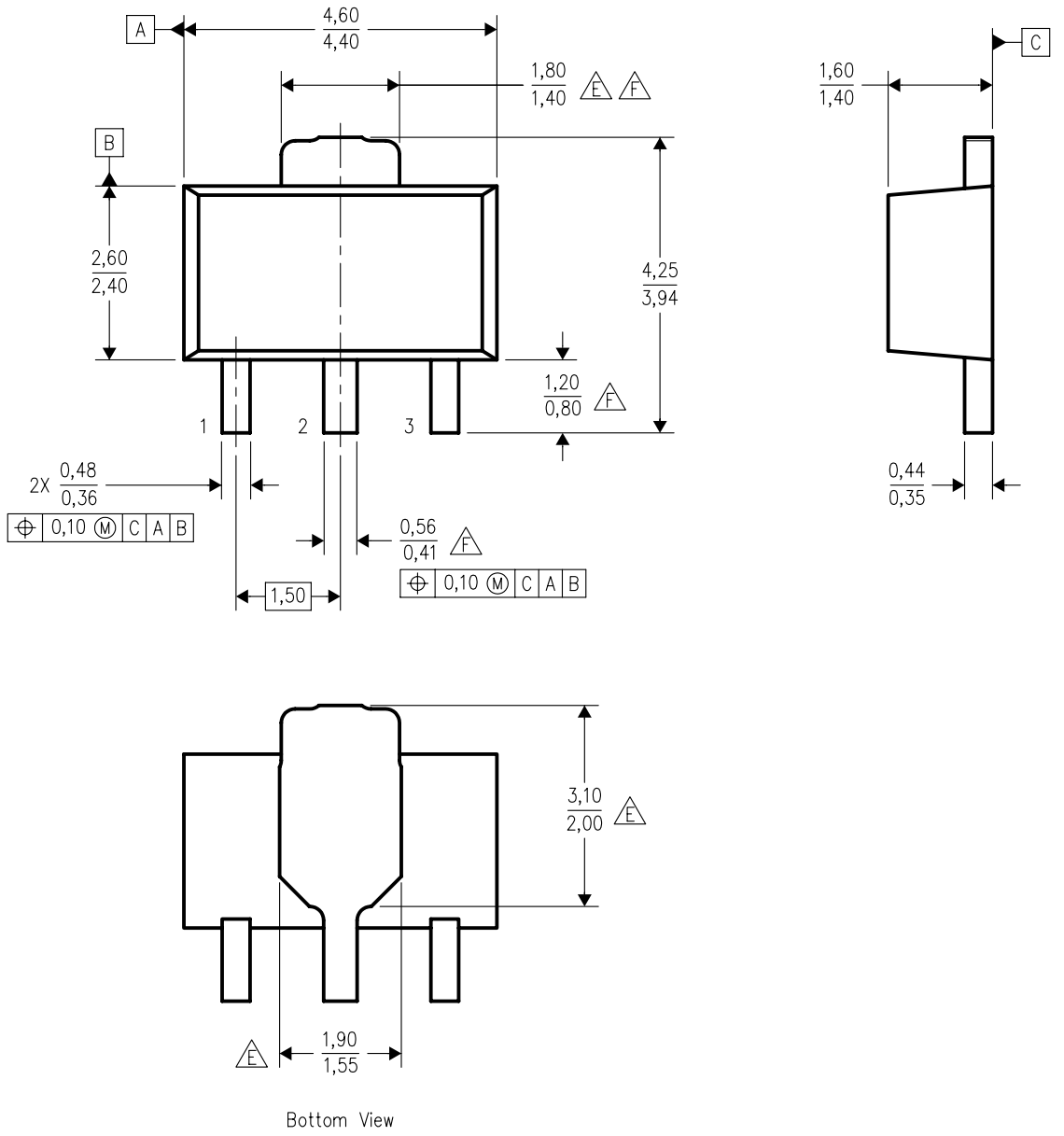

NOTES:
A. All linear dimensions are in millimeters. Dimensioning and tolerancing per ASME Y14.5M–1994.
B. This drawing is subject to change without notice.
C. The center lead is in electrical contact with the tab.
D. Body dimensions do not include mold flash or protrusion. Mold flash and protrusion not to exceed 0.15 per side.
E. Thermal pad contour optional within these dimensions.
F. Falls within JEDEC TO–243 variation AA, except minimum lead length, pin 2 minimum lead width, minimum tab width.

PK (R–PDSO–G3)

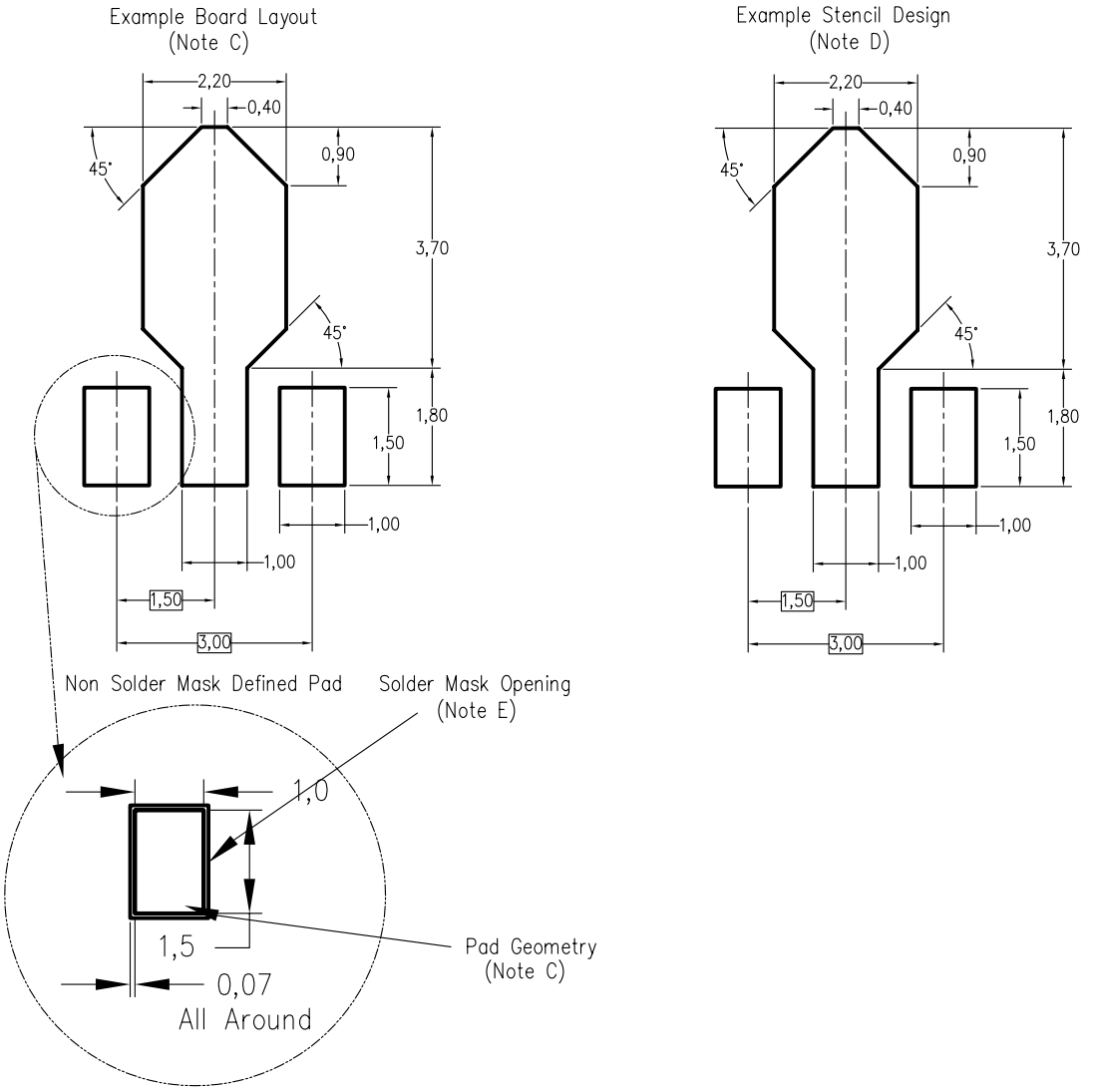

4208221/A 09/06

NOTES:
A. All linear dimensions are in millimeters.
B. This drawing is subject to change without notice.
C. Publication IPC–7351 is recommended for alternate designs.
D. Laser cutting apertures with trapezoidal walls and also rounding corners will offer better paste release. Customers should contact their board assembly site for stencil design recommendations. Refer to IPC–7525.
E. Customers should contact their board fabrication site for solder mask tolerances between and around signal pads.

FK (S–CQCC–N**) LEADLESS CERAMIC CHIP CARRIER

28 TERMINAL SHOWN

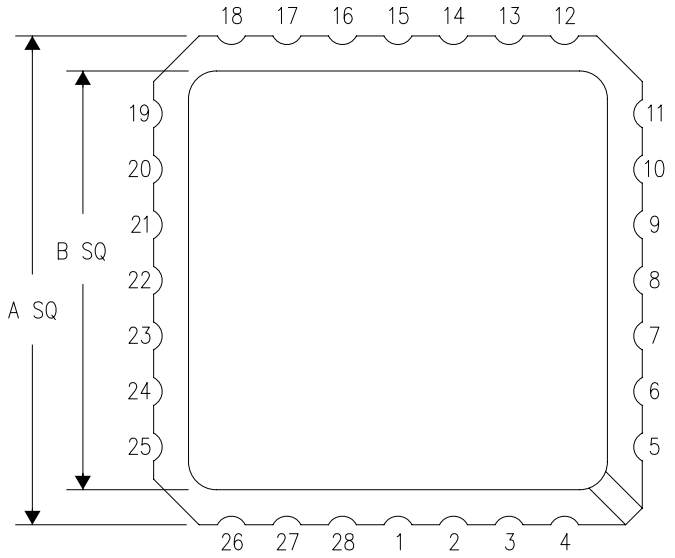

NO. OF TERMINALS **	A		B	
	MIN	MAX	MIN	MAX
20	0.342 (8,69)	0.358 (9,09)	0.307 (7,80)	0.358 (9,09)
28	0.442 (11,23)	0.458 (11,63)	0.406 (10,31)	0.458 (11,63)
44	0.640 (16,26)	0.660 (16,76)	0.495 (12,58)	0.560 (14,22)
52	0.740 (18,78)	0.761 (19,32)	0.495 (12,58)	0.560 (14,22)
68	0.938 (23,83)	0.962 (24,43)	0.850 (21,6)	0.858 (21,8)
84	1.141 (28,99)	1.165 (29,59)	1.047 (26,6)	1.063 (27,0)

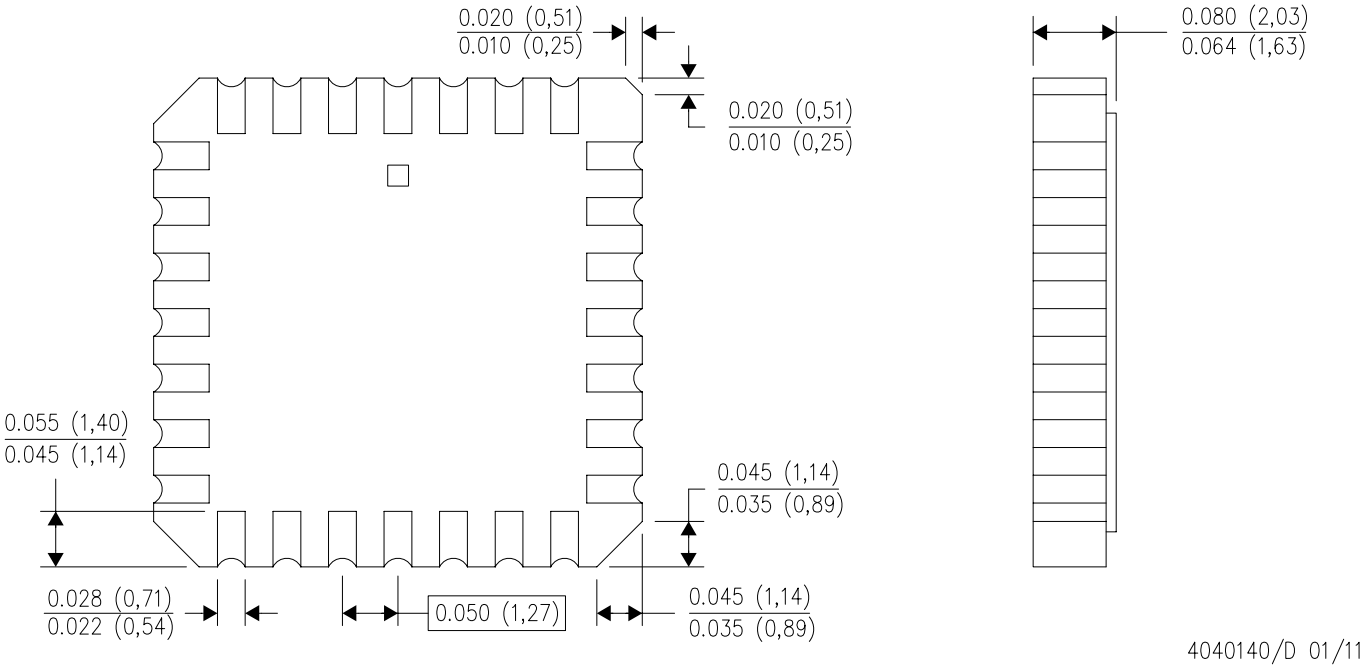

4040140/D 01/11

NOTES:
A. All linear dimensions are in inches (millimeters).
B. This drawing is subject to change without notice.
C. This package can be hermetically sealed with a metal lid.
D. Falls within JEDEC MS–004

P (R–PDIP–T8) PLASTIC DUAL–IN–LINE PACKAGE

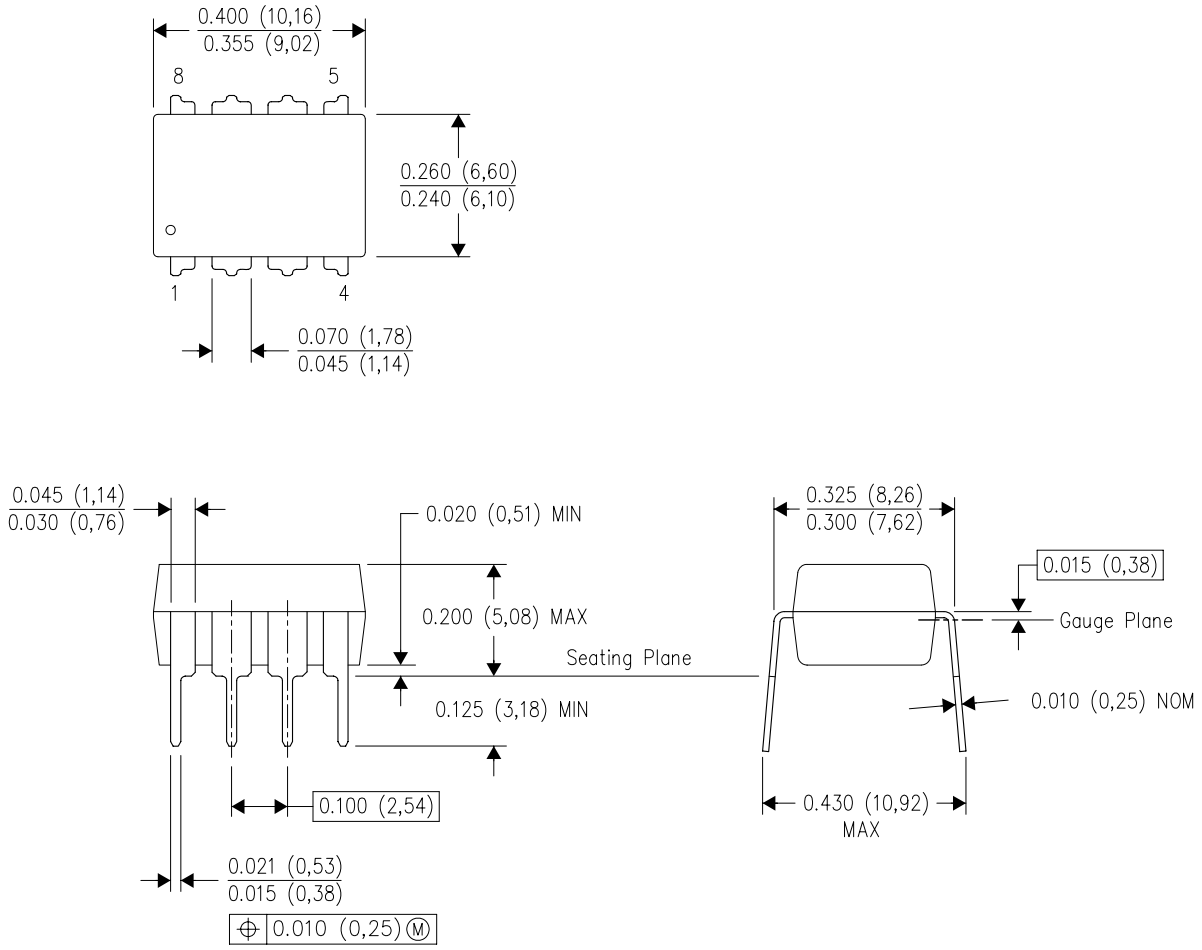

NOTES:
A. All linear dimensions are in inches (millimeters).
B. This drawing is subject to change without notice.
C. Falls within JEDEC MS–001 variation BA.

DBV (R–PDSO–G5) PLASTIC SMALL–OUTLINE PACKAGE

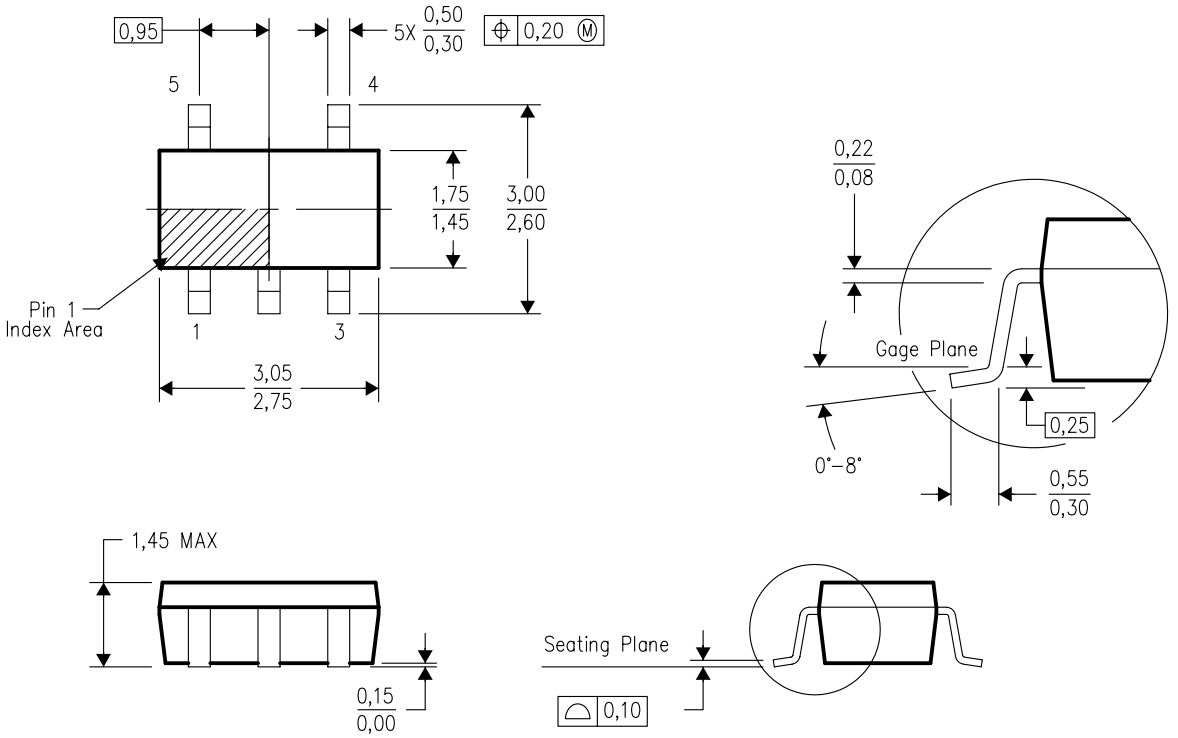

4073253–4/K 03/2006

NOTES:
A. All linear dimensions are in millimeters.
B. This drawing is subject to change without notice.
C. Body dimensions do not include mold flash or protrusion. Mold flash and protrusion shall not exceed 0.15 per side.
D. Falls within JEDEC MO–178 Variation AA.

DBV (R–PDSO–G5) PLASTIC SMALL OUTLINE

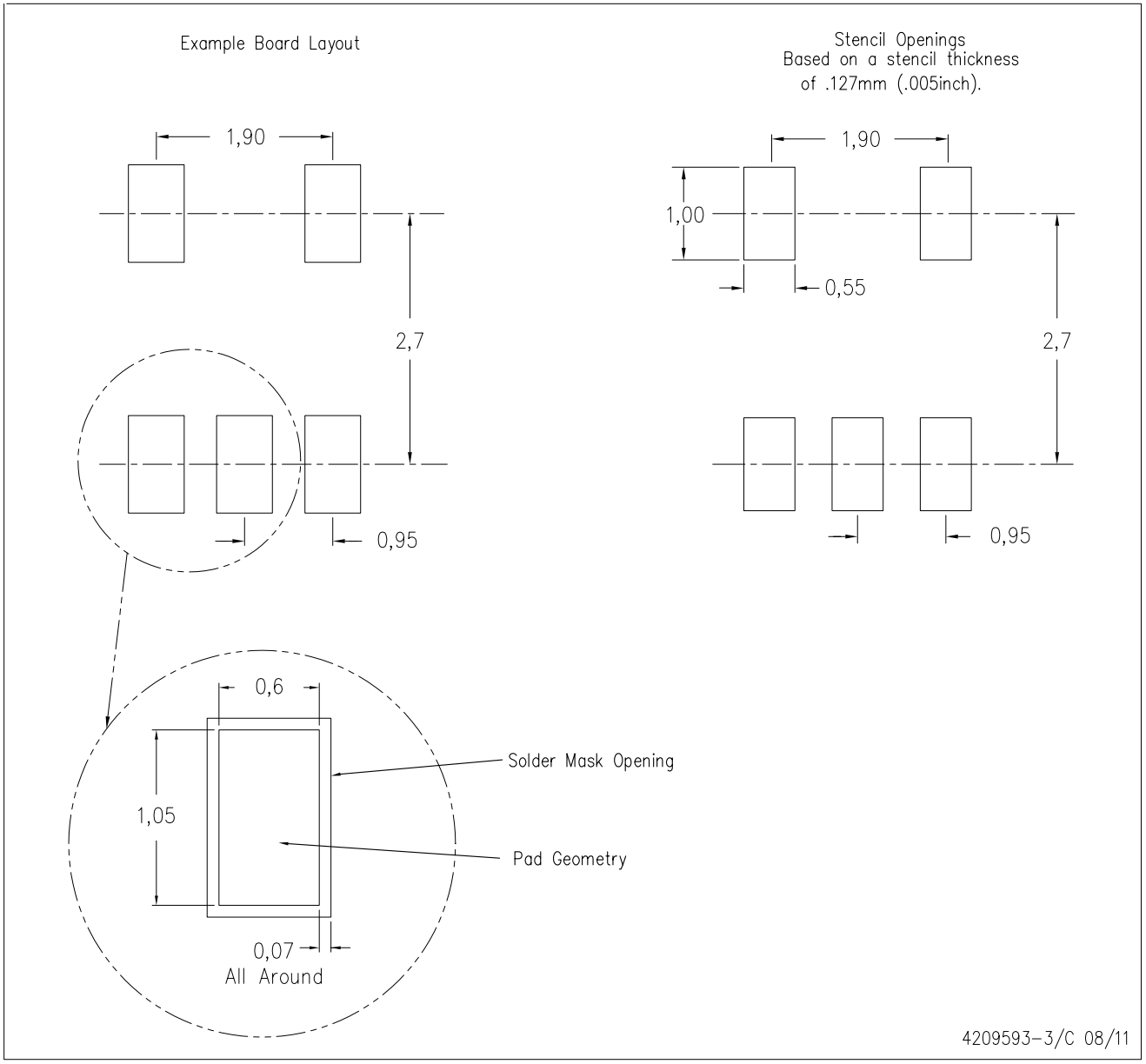

NOTES:
A. All linear dimensions are in millimeters.
B. This drawing is subject to change without notice.
C. Customers should place a note on the circuit board fabrication drawing not to alter the center solder mask defined pad.
D. Publication IPC–7351 is recommended for alternate designs.
E. Laser cutting apertures with trapezoidal walls and also rounding corners will offer better paste release. Customers should contact their board assembly site for stencil design recommendations. Example stencil design based on a 50% volumetric metal load solder paste. Refer to IPC–7525 for other stencil recommendations.

DBZ (R–PDSO–G3) PLASTIC SMALL–OUTLINE

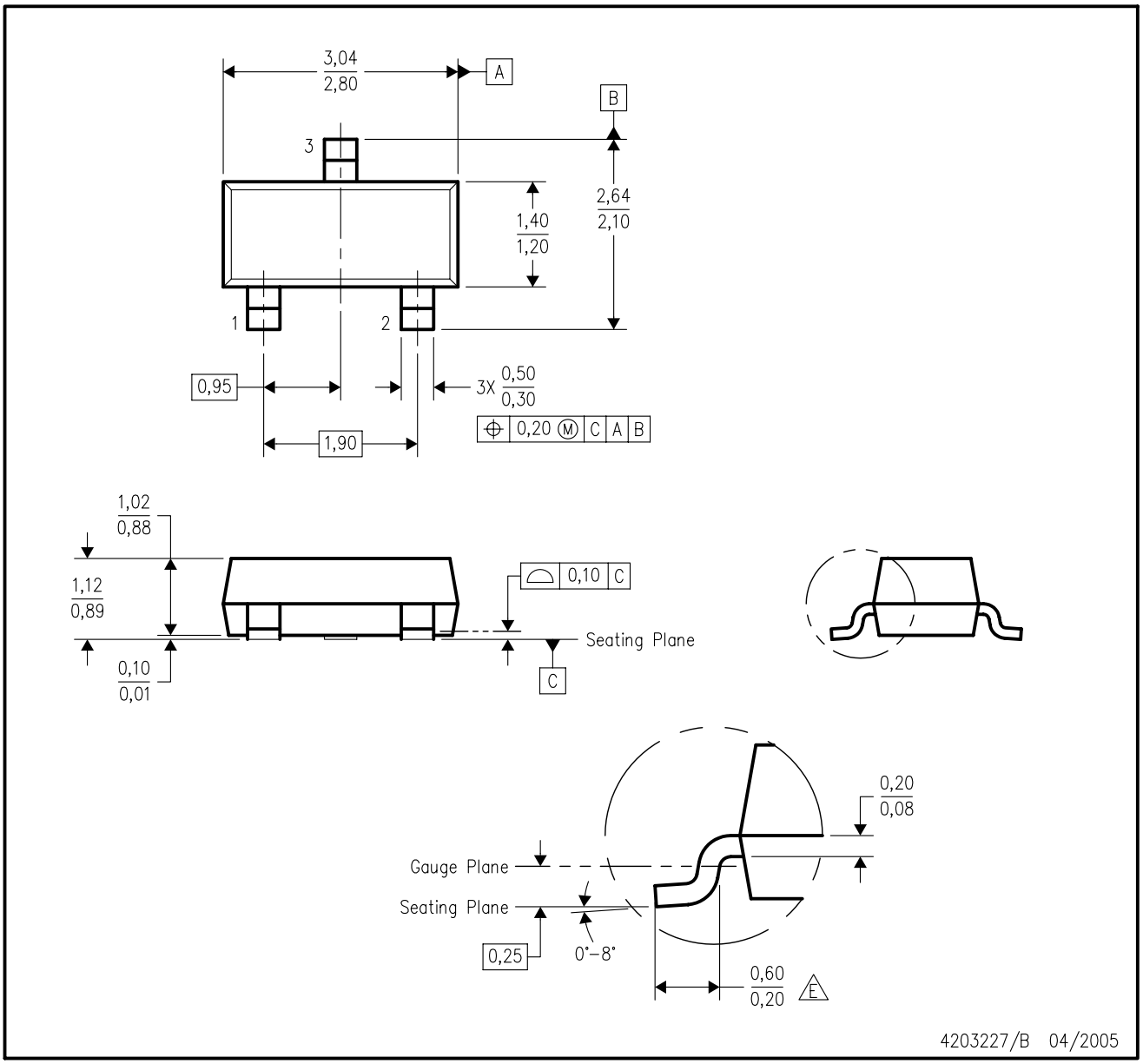

NOTES:
A. All linear dimensions are in millimeters. Dimensioning and tolerancing per ASME Y14.5M–1994.
B. This drawing is subject to change without notice.
C. Lead dimensions are inclusive of plating.
D. Body dimensions are exclusive of mold flash and protrusion. Mold flash and protrusion not to exceed 0.25 per side.
E. Falls within JEDEC TO–236 variation AB, except minimum foot length.

DBZ (R–PDSO–G3) PLASTIC SMALL OUTLINE

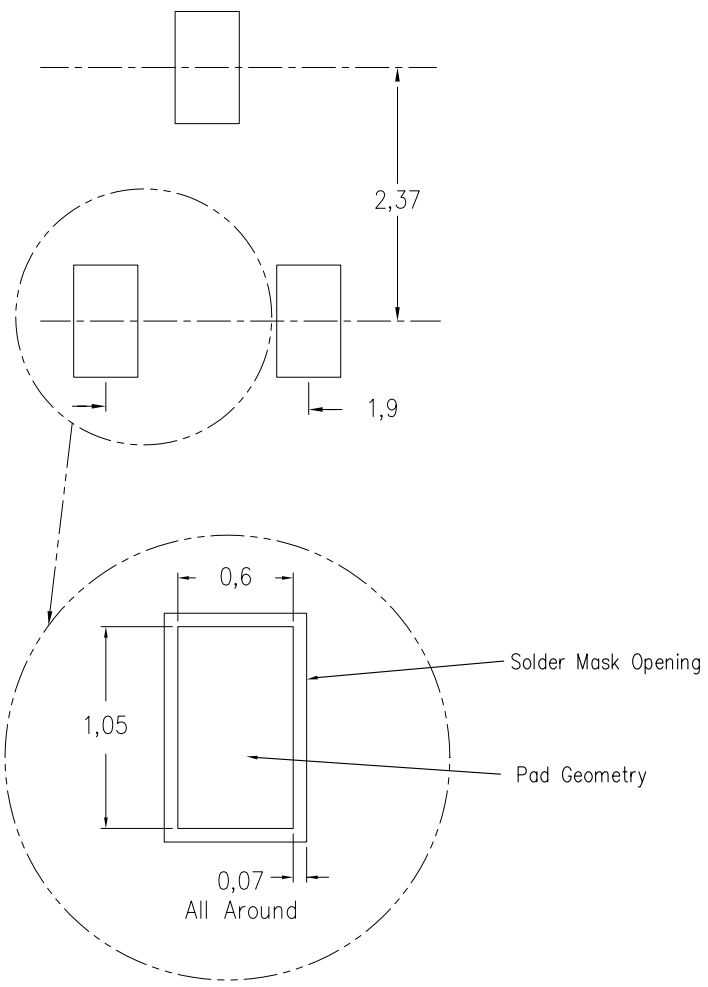

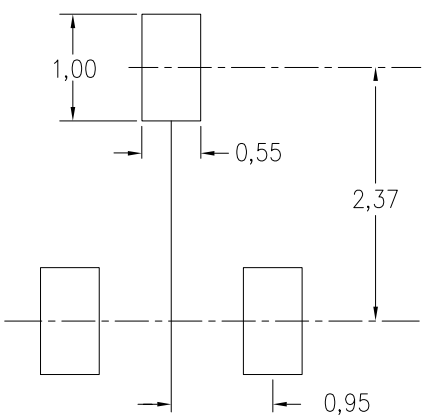

4212057/A 08/11

NOTES:
A. All linear dimensions are in millimeters.
B. This drawing is subject to change without notice.
C. Customers should place a note on the circuit board fabrication drawing not to alter the center solder mask defined pad.
D. Publication IPC–7351 is recommended for alternate designs.
E. Laser cutting apertures with trapezoidal walls and also rounding corners will offer better paste release. Customers should contact their board assembly site for stencil design recommendations. Example stencil design based on a 50% volumetric metal load solder paste. Refer to IPC–7525 for other stencil recommendations.

DCK (R–PDSO–G6) PLASTIC SMALL–OUTLINE PACKAGE

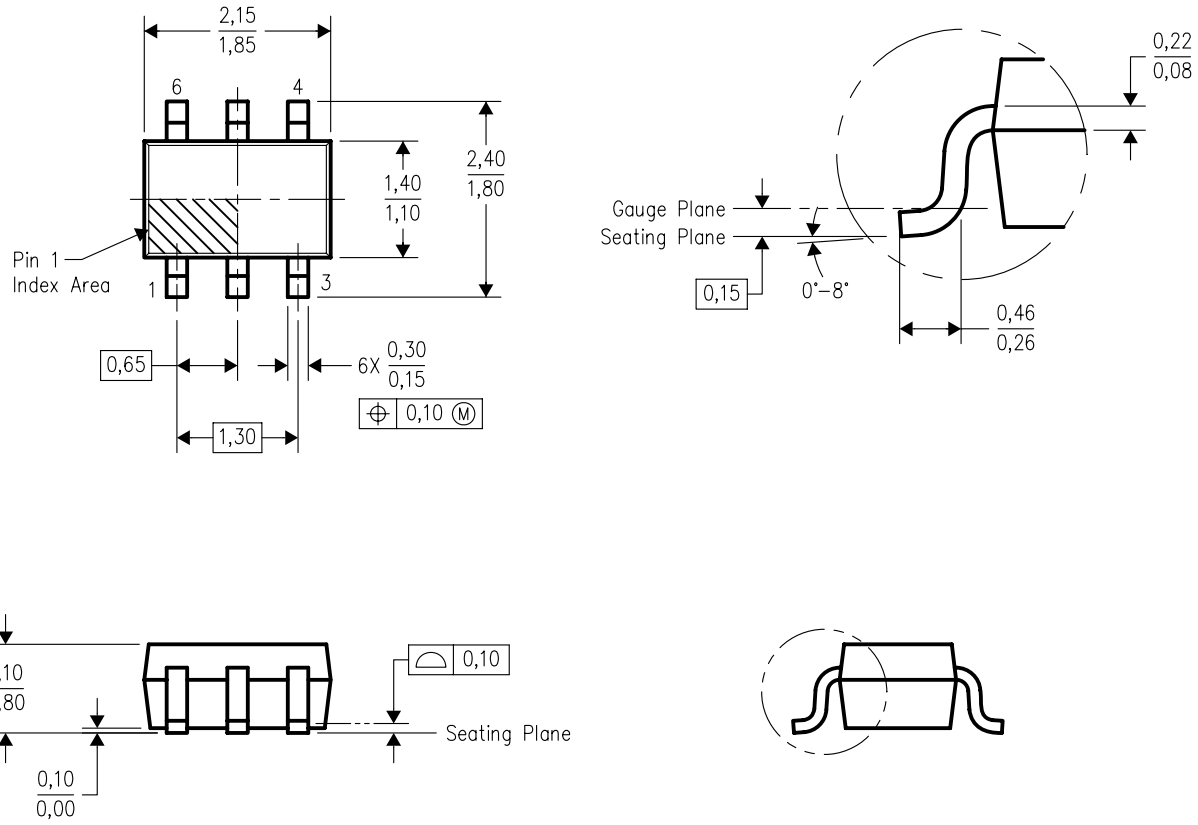

4093553–4/G 01/2007

NOTES:
A. All linear dimensions are in millimeters.
B. This drawing is subject to change without notice.
C. Body dimensions do not include mold flash or protrusion. Mold flash and protrusion shall not exceed 0.15 per side.
D. Falls within JEDEC MO–203 variation AB.

DCK (R–PDSO–G6) PLASTIC SMALL OUTLINE

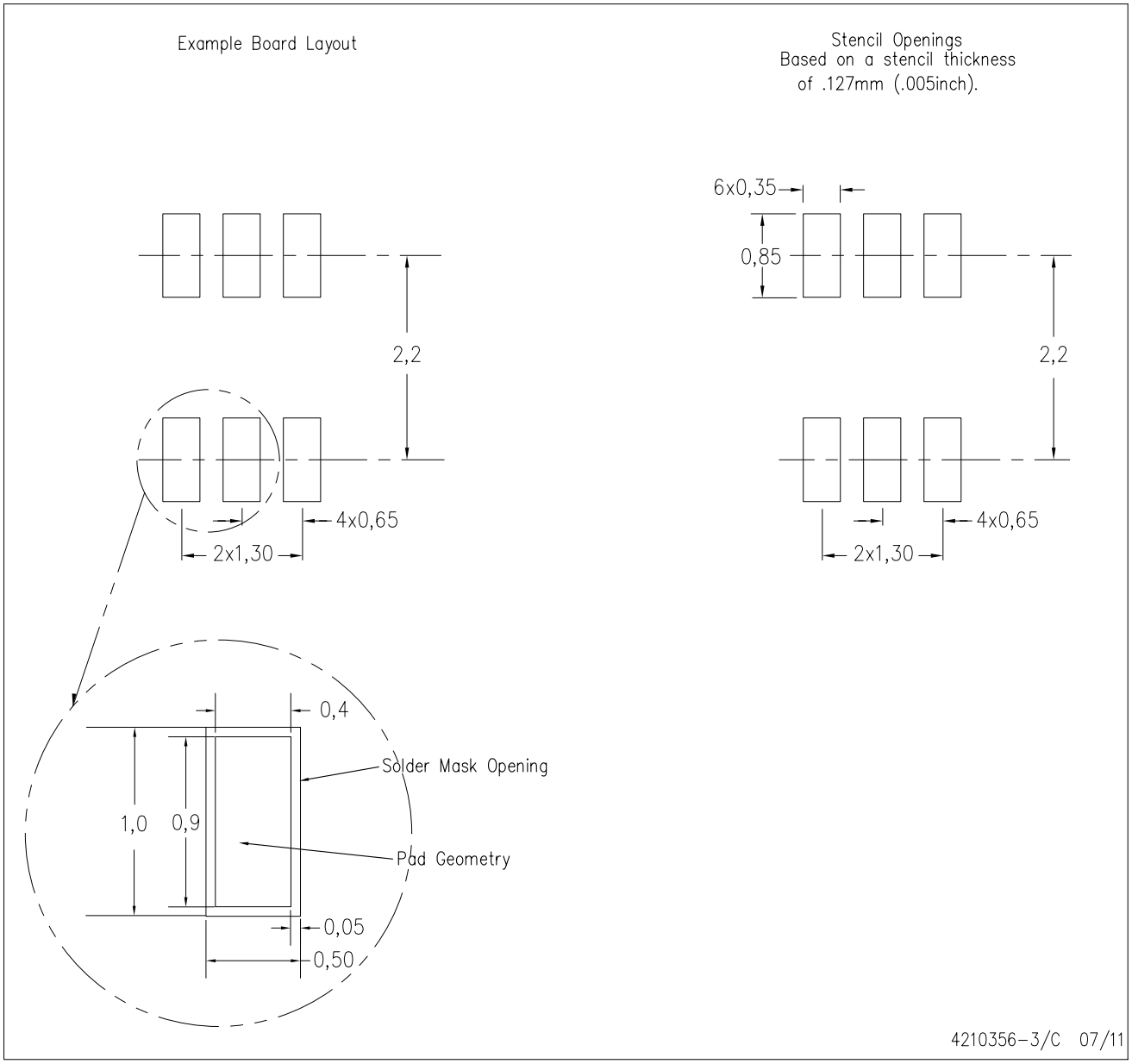

NOTES:
A. All linear dimensions are in millimeters.
B. This drawing is subject to change without notice.
C. Customers should place a note on the circuit board fabrication drawing not to alter the center solder mask defined pad.
D. Publication IPC–7351 is recommended for alternate designs.
E. Laser cutting apertures with trapezoidal walls and also rounding corners will offer better paste release. Customers should contact their board assembly site for stencil design recommendations. Example stencil design based on a 50% volumetric metal load solder paste. Refer to IPC–7525 for other stencil recommendations.

MPSF001F – JANUARY 1996 – REVISED JANUARY 2002

KTP (R-PSFM-G2) **PowerFLEX™ PLASTIC FLANGE-MOUNT PACKAGE**

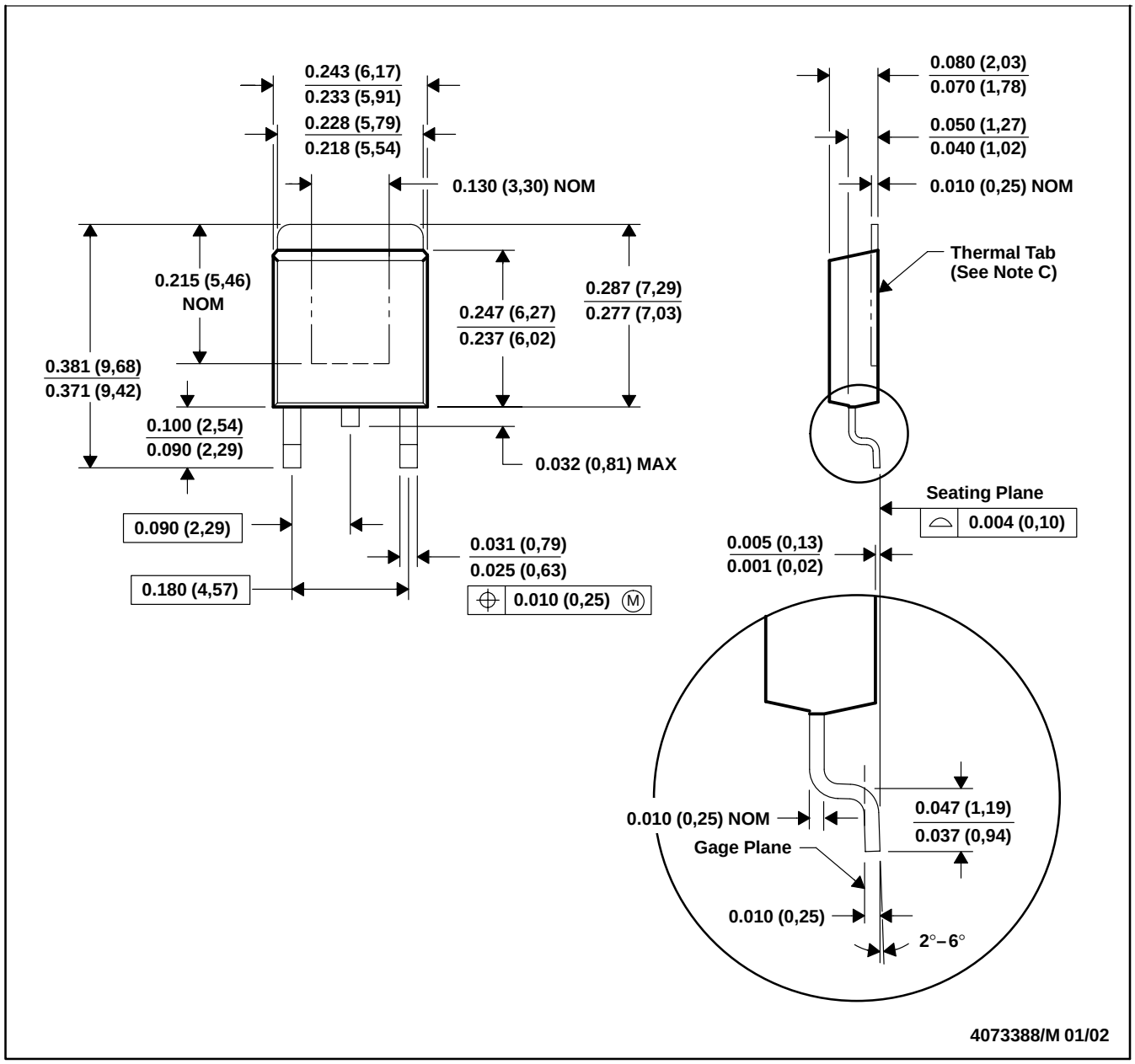

NOTES: A. All linear dimensions are in inches (millimeters).
B. This drawing is subject to change without notice.
C. The center lead is in electrical contact with the thermal tab.
D. Dimensions do not include mold protrusions, not to exceed 0.006 (0,15).
E. Falls within JEDEC TO-252 variation AC.

PowerFLEX is a trademark of Texas Instruments.

D (R–PDSO–G8) PLASTIC SMALL OUTLINE

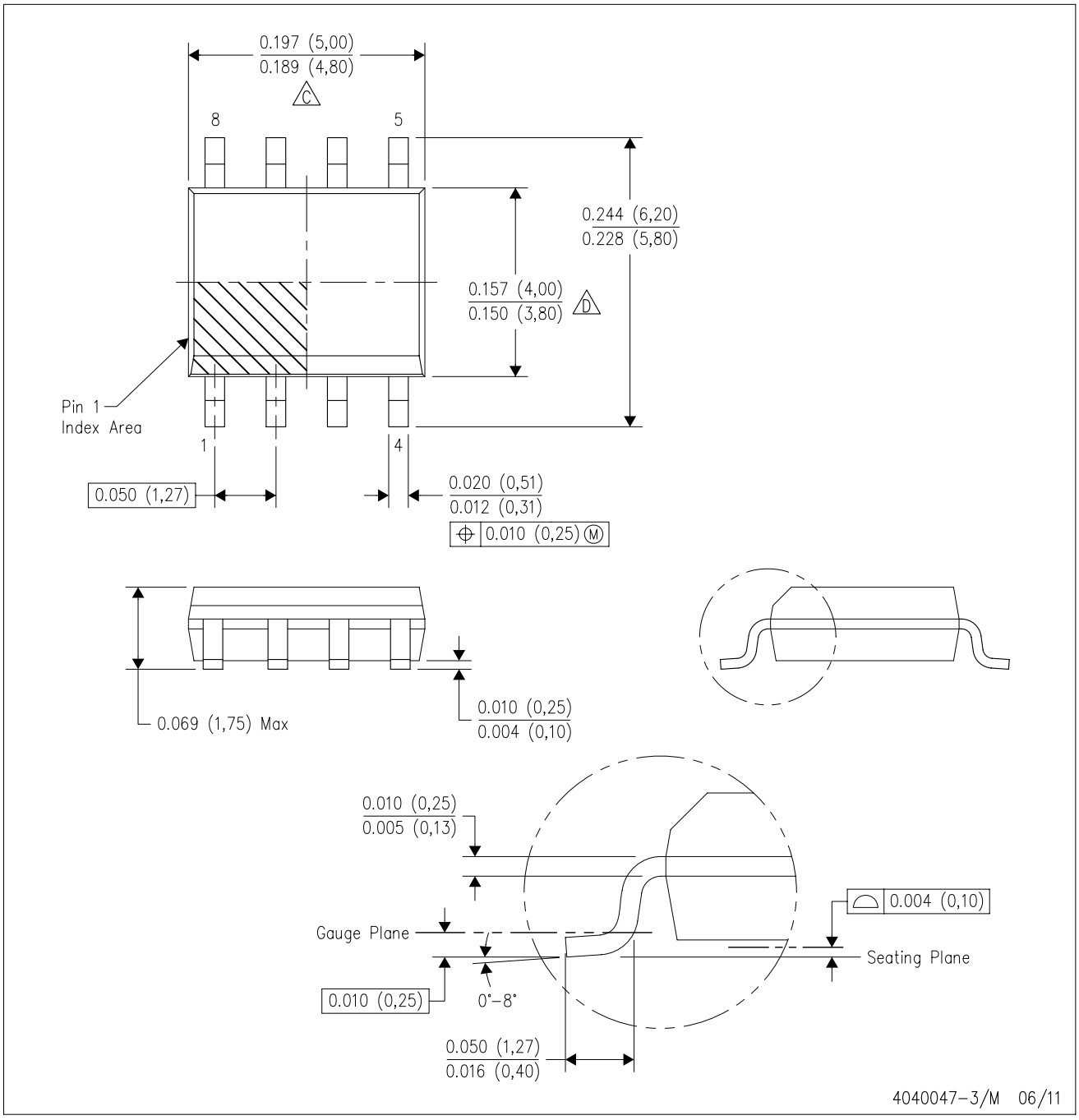

NOTES:
A. All linear dimensions are in inches (millimeters).
B. This drawing is subject to change without notice.
C. Body length does not include mold flash, protrusions, or gate burrs. Mold flash, protrusions, or gate burrs shall not exceed 0.006 (0,15) each side.
D. Body width does not include interlead flash. Interlead flash shall not exceed 0.017 (0,43) each side.
E. Reference JEDEC MS–012 variation AA.

D (R–PDSO–G8) PLASTIC SMALL OUTLINE

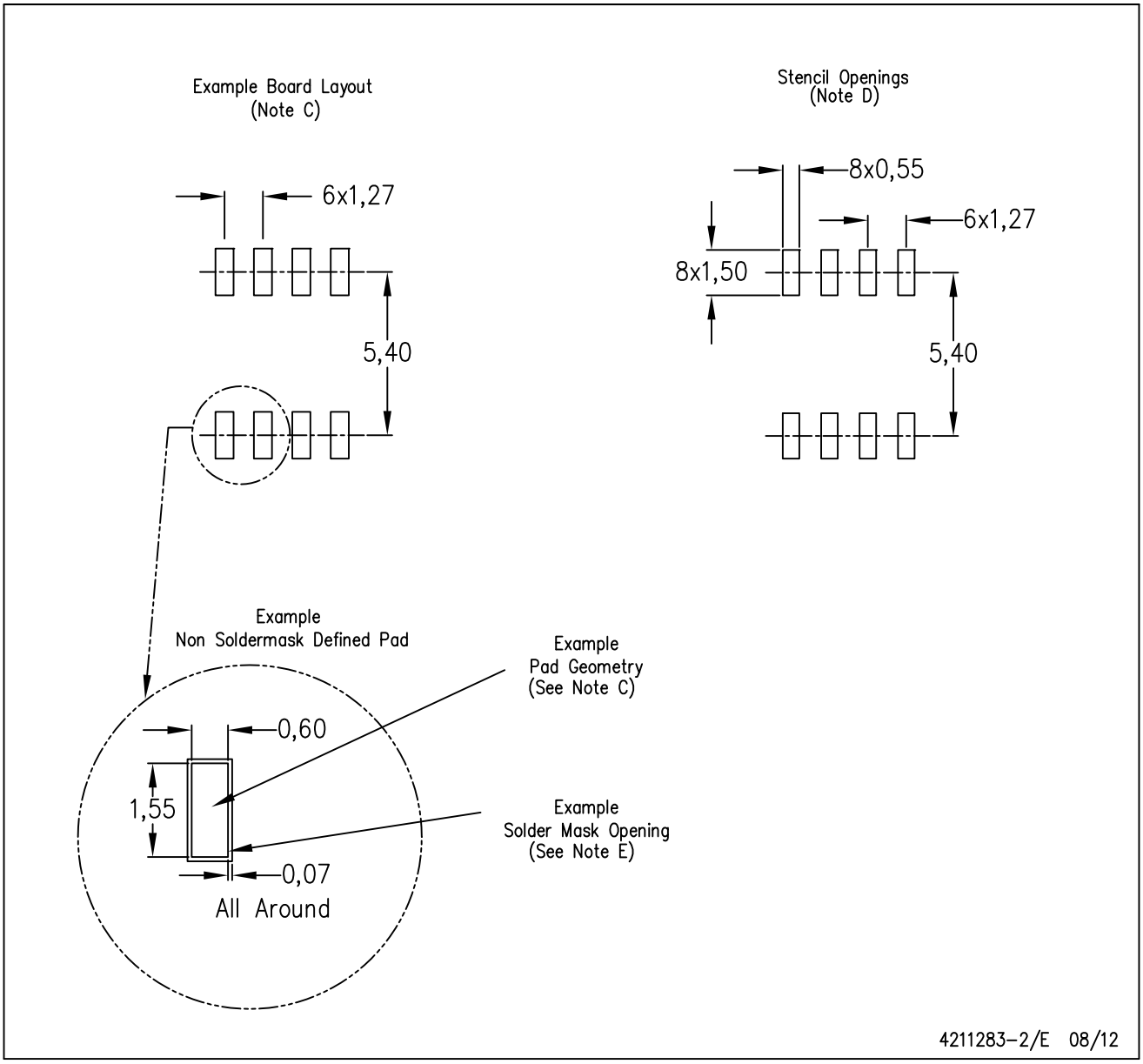

NOTES:
A. All linear dimensions are in millimeters.
B. This drawing is subject to change without notice.
C. Publication IPC–7351 is recommended for alternate designs.
D. Laser cutting apertures with trapezoidal walls and also rounding corners will offer better paste release. Customers should contact their board assembly site for stencil design recommendations. Refer to IPC–7525 for other stencil recommendations.
E. Customers should contact their board fabrication site for solder mask tolerances between and around signal pads.

MECHANICAL DATA

PS (R-PDSO-G8) **PLASTIC SMALL-OUTLINE PACKAGE**

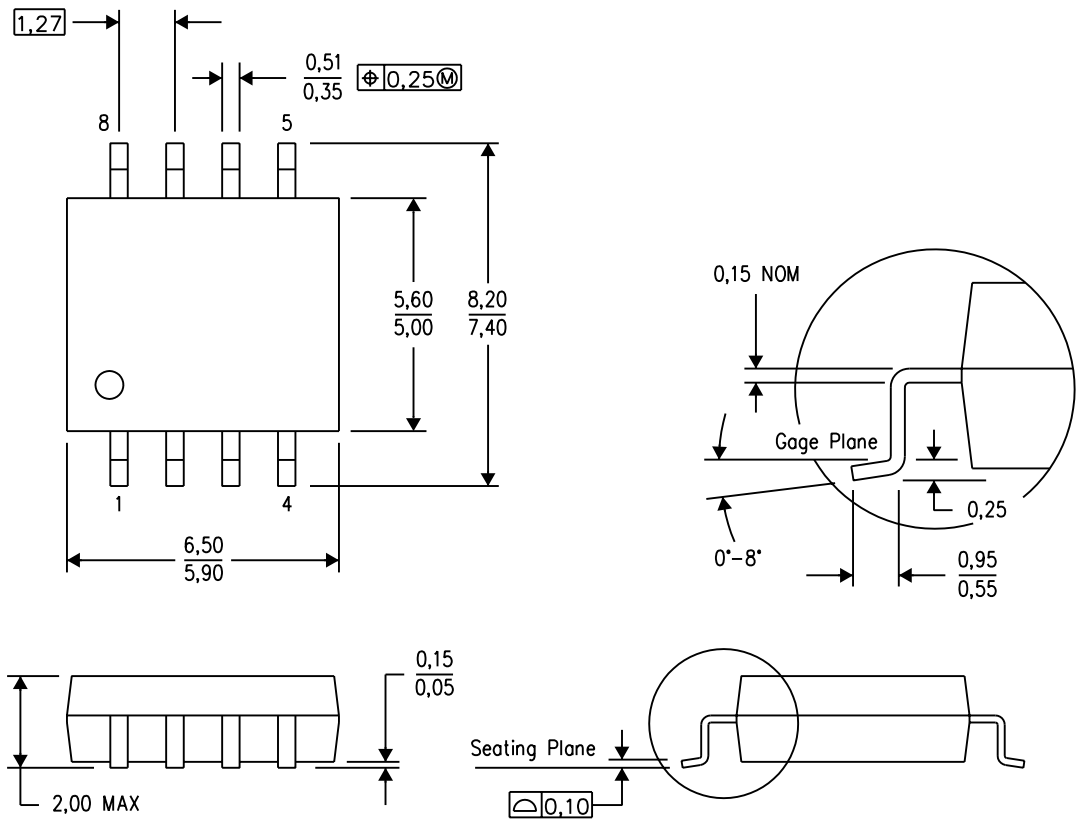

4040063/C 03/03

NOTES:
A. All linear dimensions are in millimeters.
B. This drawing is subject to change without notice.
C. Body dimensions do not include mold flash or protrusion, not to exceed 0,15.

PS (R–PDSO–G8) PLASTIC SMALL OUTLINE

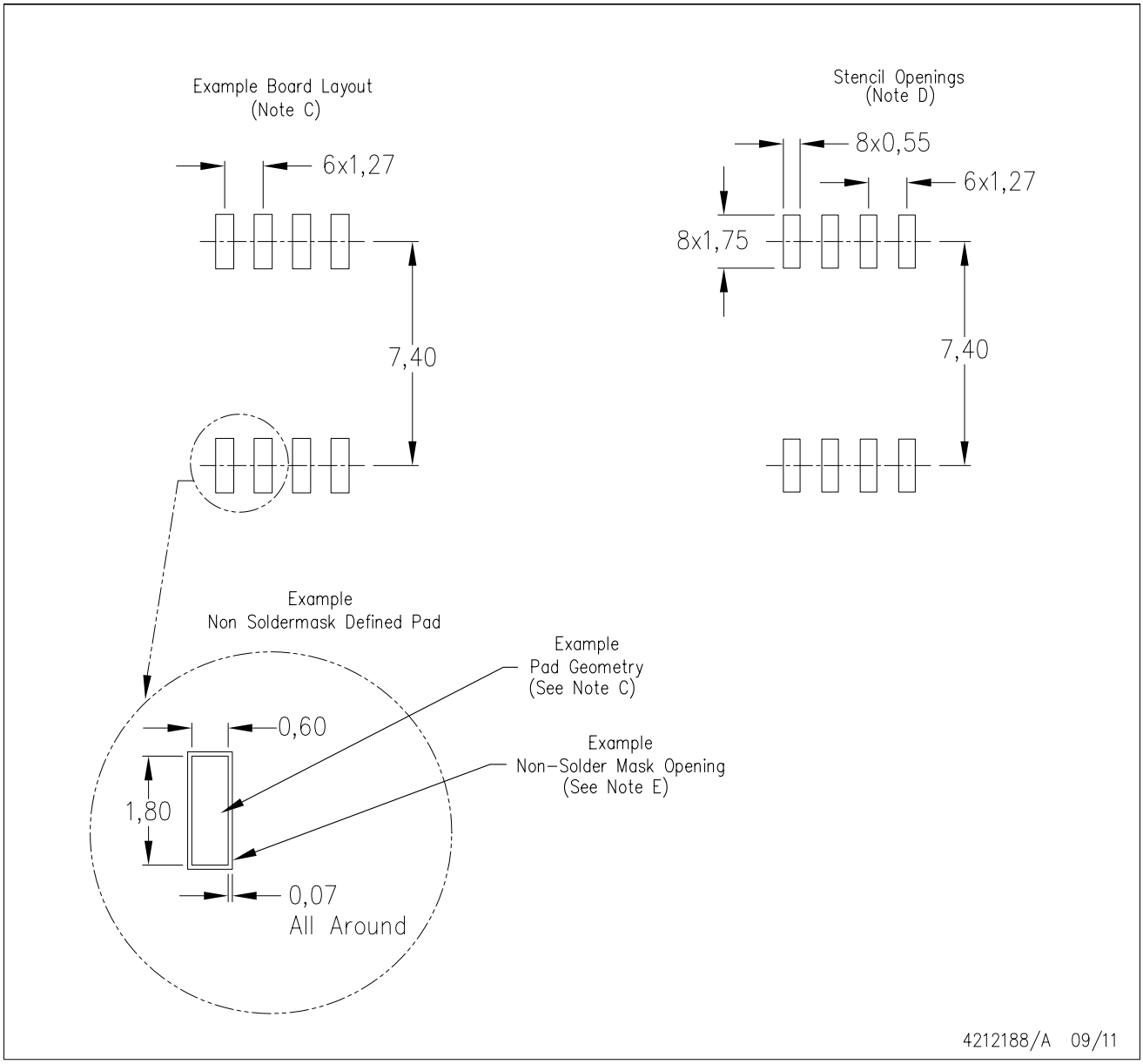

NOTES:
A. All linear dimensions are in millimeters.
B. This drawing is subject to change without notice.
C. Publication IPC–7351 is recommended for alternate designs.
D. Laser cutting apertures with trapezoidal walls and also rounding corners will offer better paste release. Customers should contact their board assembly site for stencil design recommendations. Refer to IPC–7525 for other stencil recommendations.
E. Customers should contact their board fabrication site for solder mask tolerances between and around signal pads.

LP (O–PBCY–W3) PLASTIC CYLINDRICAL PACKAGE

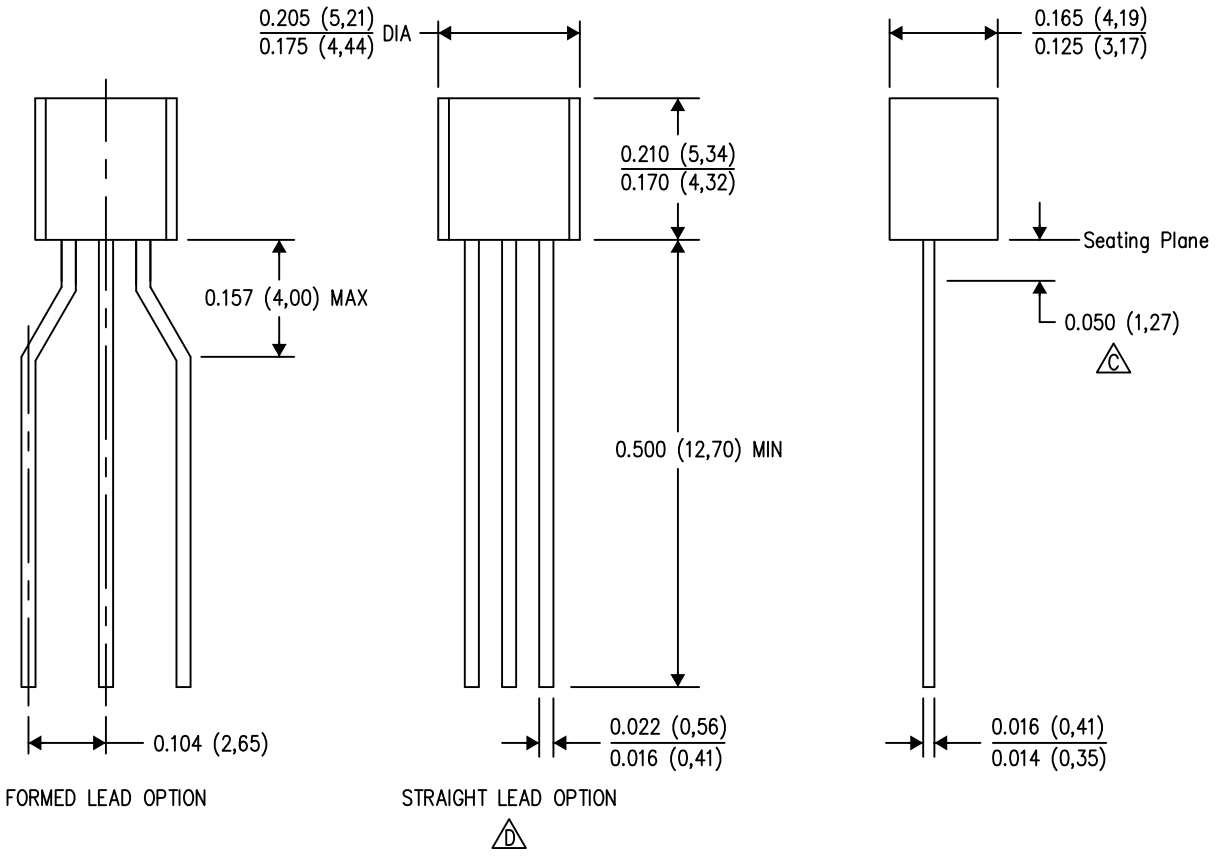

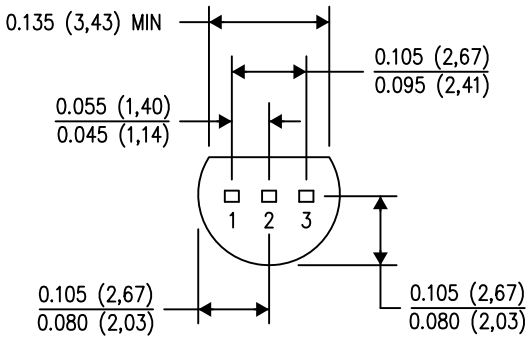

4040001–2/D 01/13

NOTES:
A. All linear dimensions are in inches (millimeters).
B. This drawing is subject to change without notice.
C. Lead dimensions are not controlled within this area.
D. Falls within JEDEC TO–226 Variation AA (TO–226 replaces TO–92).
E. Shipping Method:
Straight lead option available in either bulk pack or tape & reel.
Formed lead option available in tape & reel or ammo pack.
Specific products can be offered in limited combinations of shipping mediums and lead options.
Consult product folder for more information on available options.

LP (O–PBCY–W3) PLASTIC CYLINDRICAL PACKAGE

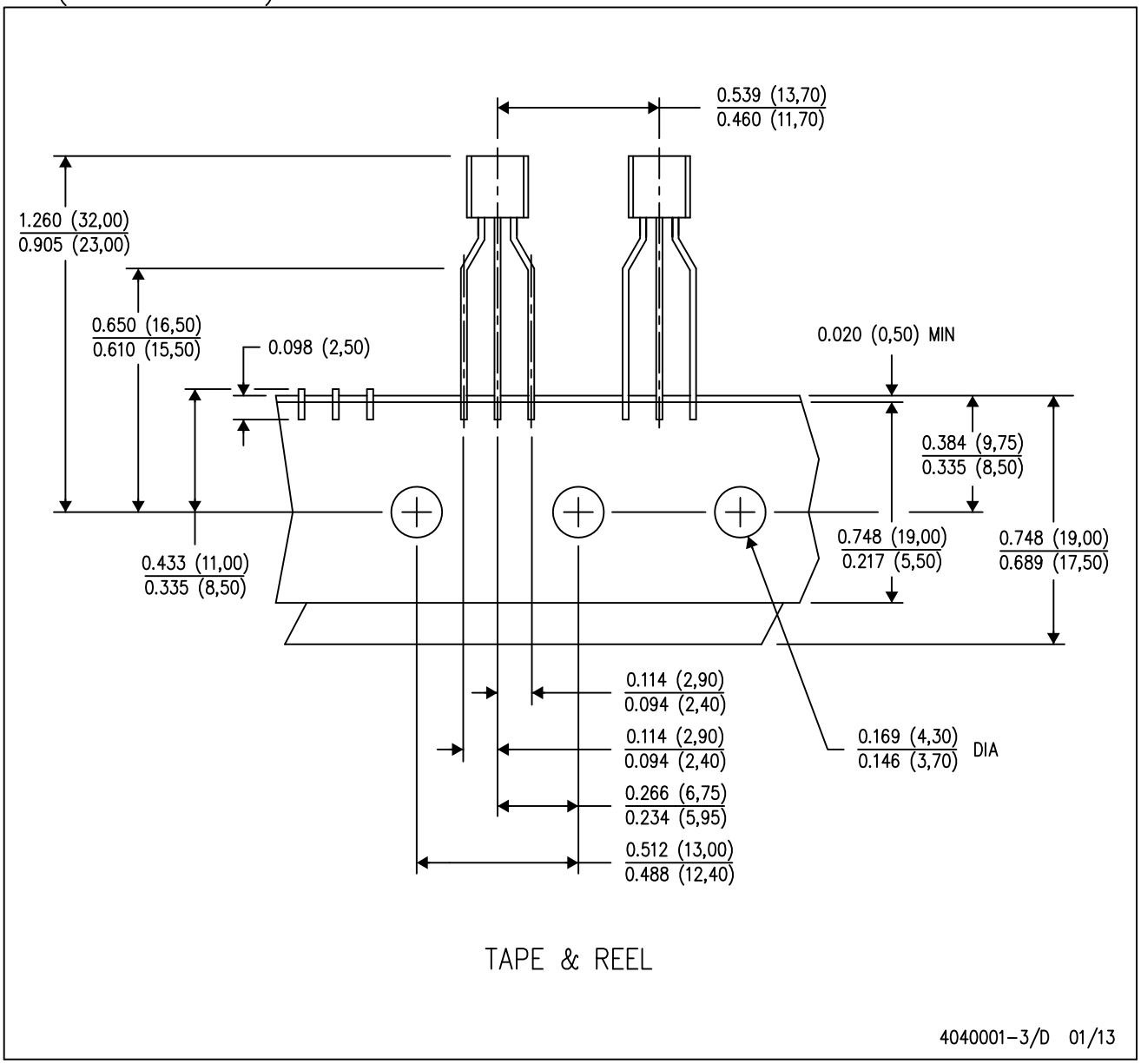

NOTES:
A. All linear dimensions are in inches (millimeters).
B. This drawing is subject to change without notice.
C. Tape and Reel information for the Formed Lead Option package.

PW (R–PDSO–G8) PLASTIC SMALL OUTLINE

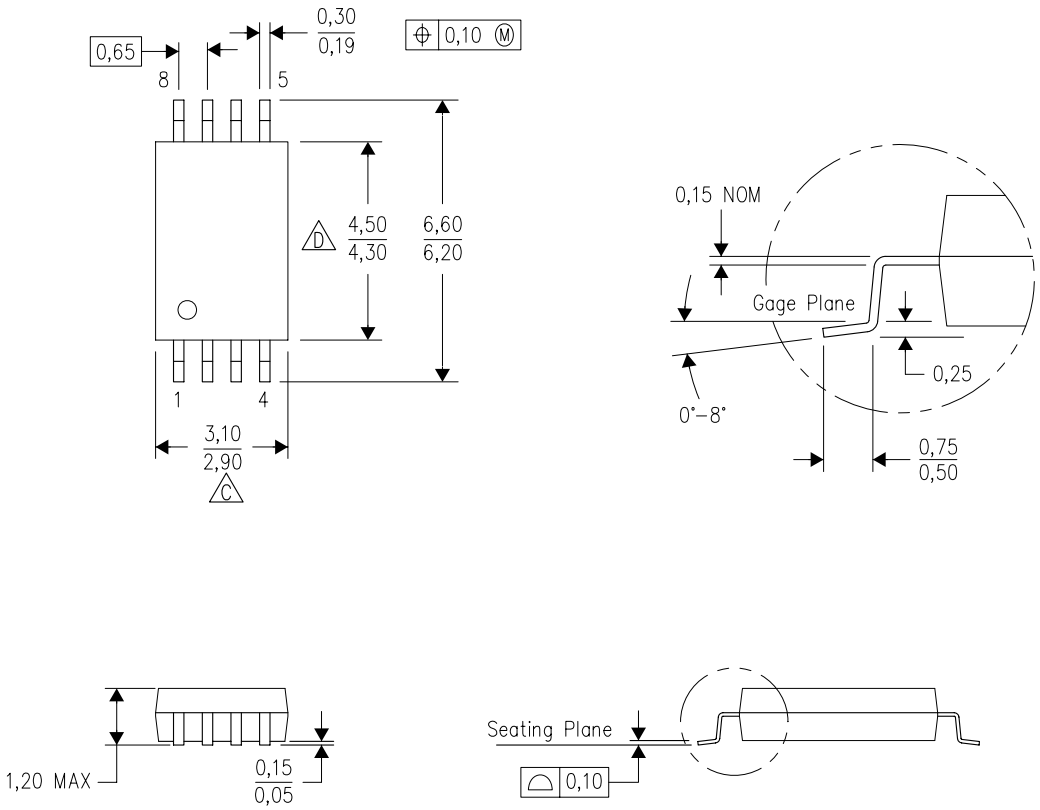

4040064–2/G 02/11

NOTES:
A. All linear dimensions are in millimeters. Dimensioning and tolerancing per ASME Y14.5M–1994.
B. This drawing is subject to change without notice.
C. Body length does not include mold flash, protrusions, or gate burrs. Mold flash, protrusions, or gate burrs shall not exceed 0,15 each side.
D. Body width does not include interlead flash. Interlead flash shall not exceed 0,25 each side.
E. Falls within JEDEC MO–153

IMPORTANT NOTICE

Texas Instruments Incorporated and its subsidiaries (TI) reserve the right to make corrections, enhancements, improvements and other changes to its semiconductor products and services per JESD46, latest issue, and to discontinue any product or service per JESD48, latest issue. Buyers should obtain the latest relevant information before placing orders and should verify that such information is current and complete. All semiconductor products (also referred to herein as “components”) are sold subject to TI’s terms and conditions of sale supplied at the time of order acknowledgment.

TI warrants performance of its components to the specifications applicable at the time of sale, in accordance with the warranty in TI’s terms and conditions of sale of semiconductor products. Testing and other quality control techniques are used to the extent TI deems necessary to support this warranty. Except where mandated by applicable law, testing of all parameters of each component is not necessarily performed.

TI assumes no liability for applications assistance or the design of Buyers’ products. Buyers are responsible for their products and applications using TI components. To minimize the risks associated with Buyers’ products and applications, Buyers should provide adequate design and operating safeguards.

TI does not warrant or represent that any license, either express or implied, is granted under any patent right, copyright, mask work right, or other intellectual property right relating to any combination, machine, or process in which TI components or services are used. Information published by TI regarding third-party products or services does not constitute a license to use such products or services or a warranty or endorsement thereof. Use of such information may require a license from a third party under the patents or other intellectual property of the third party, or a license from TI under the patents or other intellectual property of TI.

Reproduction of significant portions of TI information in TI data books or data sheets is permissible only if reproduction is without alteration and is accompanied by all associated warranties, conditions, limitations, and notices. TI is not responsible or liable for such altered documentation. Information of third parties may be subject to additional restrictions.

Resale of TI components or services with statements different from or beyond the parameters stated by TI for that component or service voids all express and any implied warranties for the associated TI component or service and is an unfair and deceptive business practice. TI is not responsible or liable for any such statements.

Buyer acknowledges and agrees that it is solely responsible for compliance with all legal, regulatory and safety-related requirements concerning its products, and any use of TI components in its applications, notwithstanding any applications-related information or support that may be provided by TI. Buyer represents and agrees that it has all the necessary expertise to create and implement safeguards which anticipate dangerous consequences of failures, monitor failures and their consequences, lessen the likelihood of failures that might cause harm and take appropriate remedial actions. Buyer will fully indemnify TI and its representatives against any damages arising out of the use of any TI components in safety-critical applications.

In some cases, TI components may be promoted specifically to facilitate safety-related applications. With such components, TI’s goal is to help enable customers to design and create their own end-product solutions that meet applicable functional safety standards and requirements. Nonetheless, such components are subject to these terms.

No TI components are authorized for use in FDA Class III (or similar life-critical medical equipment) unless authorized officers of the parties have executed a special agreement specifically governing such use.

Only those TI components which TI has specifically designated as military grade or “enhanced plastic” are designed and intended for use in military/aerospace applications or environments. Buyer acknowledges and agrees that any military or aerospace use of TI components which have ***not*** been so designated is solely at the Buyer's risk, and that Buyer is solely responsible for compliance with all legal and regulatory requirements in connection with such use.

TI has specifically designated certain components as meeting ISO/TS16949 requirements, mainly for automotive use. In any case of use of non-designated products, TI will not be responsible for any failure to meet ISO/TS16949.

Products		**Applications**	
Audio	www.ti.com/audio	Automotive and Transportation	www.ti.com/automotive
Amplifiers	amplifier.ti.com	Communications and Telecom	www.ti.com/communications
Data Converters	dataconverter.ti.com	Computers and Peripherals	www.ti.com/computers
DLP® Products	www.dlp.com	Consumer Electronics	www.ti.com/consumer-apps
DSP	dsp.ti.com	Energy and Lighting	www.ti.com/energy
Clocks and Timers	www.ti.com/clocks	Industrial	www.ti.com/industrial
Interface	interface.ti.com	Medical	www.ti.com/medical
Logic	logic.ti.com	Security	www.ti.com/security
Power Mgmt	power.ti.com	Space, Avionics and Defense	www.ti.com/space-avionics-defense
Microcontrollers	microcontroller.ti.com	Video and Imaging	www.ti.com/video
RFID	www.ti-rfid.com		
OMAP Applications Processors	www.ti.com/omap	**TI E2E Community**	e2e.ti.com
Wireless Connectivity	www.ti.com/wirelessconnectivity		

Mailing Address: Texas Instruments, Post Office Box 655303, Dallas, Texas 75265
Copyright © 2013, Texas Instruments Incorporated