P6SMBJ SERIES

SURFACE MOUNT TRANSIENT VOLTAGE SUPPRESSOR
VOLTAGE – 5.0-170 Volts Peak Pulse Power-600 Watts

FEATURES

- For surface mounted applications in order to optimize board space
- Low profile package
- Built-in strain relief
- Glass passivated junction
- Low inductance
- Excellent clamping capability
- Repetition Rate (duty cycle): 0.01%
- Fast response time: typically less than 1.0ps from 0 volts to BV for unidirectional types
- Typical I_D less than 1μA above 10V
- High temperature soldering: 260°C/10 seconds at terminals
- Plastic package has Underwriters Laboratory Flammability Classification 94V-O

SMB/DO-214AA

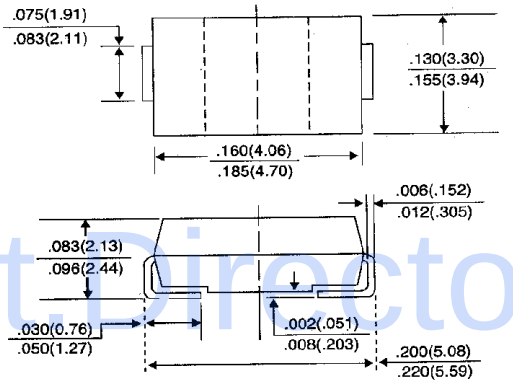

Dimensions in inches and (millimeters)

MECHANICAL DATA

Case: JEDEC DO-214AA. Molded plastic over passivated junction

Terminals: Solder plated, solderable per MIL-STD-750, Method 2026

Polarity: Color band denotes positive end (cathode) except Bidirectional

Standard Packaging: 12mm tape (EIA-481)

Weight: 0.003 ounces, 0.093 gram

Datasheet.Directory

MAXIMUM RATINGS AND ELECTRICAL CHARACTERISTICS

Ratings at 25°C ambient temperature unless otherwise specified.

	SYMBOLS	VALUE	UNITS
Peak Pulse Power Dissipation on 10/1000μs waveform (Notes 1, 2, Fig. 1)	P_{PPM}	Minimum 600	Watts
Peak Pulse Current on 10/1000μs waveform (Note 1, Fig. 3)	I_{PPM}	See Table 1	Amps
Peak forward Surge Current 8.3ms single half sine-wave superimposed on rated load (JEDEC Method) (Notes 2,3)	I_{FSM}	100.0	Amps
Operating Junction and Storage Temperature Range	T_J, T_{STG}	-55 to +150	°C

NOTES:
1. Non-repetitive current pulse, per Fig.3 and derated above $T_A = 25°C$ per Fig. 2.
2. Mounted on 5.0mm² (.013mm thick) land areas.
3. Measured on 8.3ms, single half sine-wave or equivalent square wave, duty cycle = 4 pulses per minute maximum.

SURGE COMPONENTS, INC. 1016 GRAND BLVD., DEER PARK, NY 11729
PHONE (631) 595-1818 FAX (631) 595-1283 www.surgecomponents.com

RATING AND CHARACTERISTIC CURVES
P6SMBJ SERIES

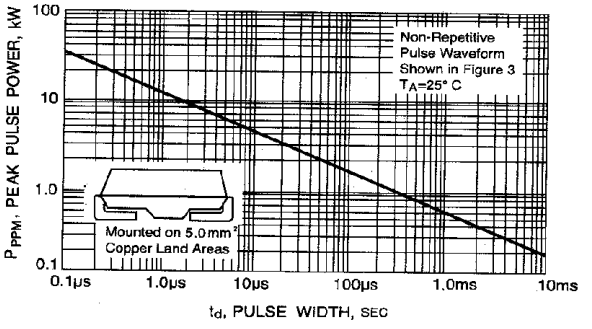

FIG.1-PEAK PULSE POWER RATING CURVE

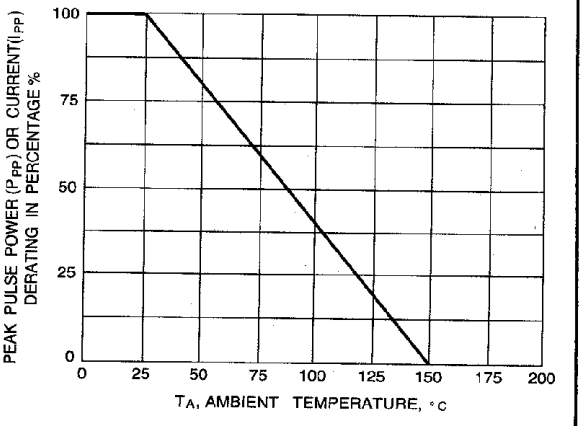

FIG.2-PULSE RATING CURVE

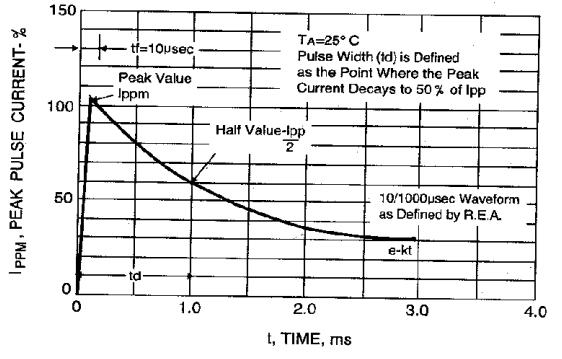

FIG.3-PULSE WAVEFORM

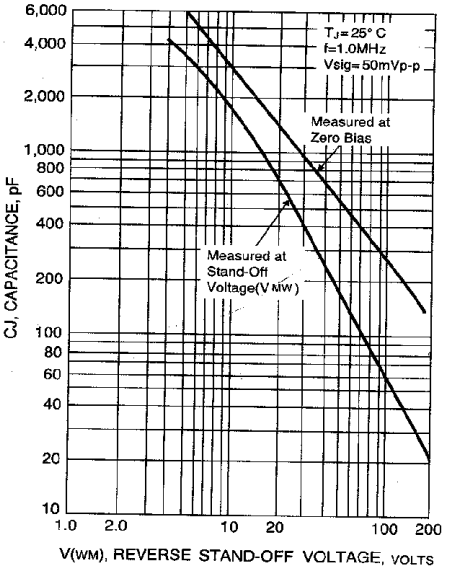

FIG.4-TYPICAL JUNCTION CAPACITANCE

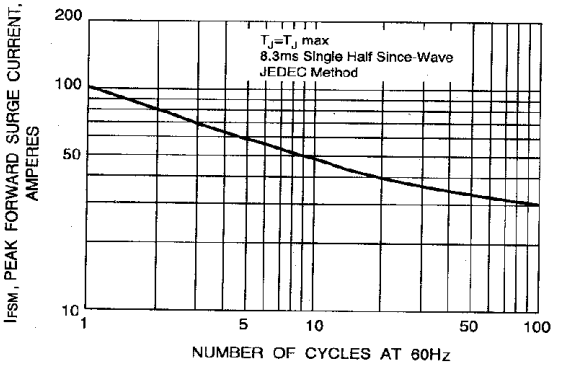

FIG.5-MAXIMUM NON-REPETITIVE
PEAK FORWARD SURGE CURRENT

SURGE COMPONENTS, INC. 1016 GRAND BLVD., DEER PARK, NY 11729
PHONE (631) 595-1818 FAX (631) 595-1283 www.surgecomponents.com

SURGE

QUALITY ON BOARD

UNI-DIRECTIONAL 600 Watt Surface Mount TVS

UNI-DIRECTIONAL PART NUMBER	DEVICE MARKING CODE	REVERSE STAND-OFF VOLTAGE VRWM (V)	BREAKDOWN VOLTAGE VBR (V) MIN. @ IT	BREAKDOWN VOLTAGE VBR (V) MAX. @ IT	TEST CURRENT IT (mA)	MAXIMUM CLAMPING VOLTAGE @Ipp Vc (V)	PEAK PULSE CURRENT Ipp (A)	REVERSE LEAKAGE @VRWM IR (uA)
P6SMBJ5.0	KD	5.0	6.40	7.55	10	9.6	62.5	800
P6SMBJ5.0A	KE	5.0	6.40	7.25	10	9.2	65.2	800
P6SMBJ6.0	KF	6.0	6.67	8.45	10	11.4	52.6	800
P6SMBJ6.0A	KG	6.0	6.67	7.67	10	10.3	58.3	800
P6SMBJ6.5	KH	6.5	7.22	9.14	10	12.3	48.7	500
P6SMBJ6.5A	KK	6.5	7.22	8.30	10	11.2	53.6	500
P6SMBJ7.0	KL	7.0	7.78	9.86	10	13.3	45.1	200
P6SMBJ7.0A	KM	7.0	7.78	8.95	10	12.0	50.0	200
P6SMBJ7.5	KN	7.5	8.33	10.67	1	14.3	42.0	100
P6SMBJ7.5A	KP	7.5	8.33	9.58	1	12.9	46.5	100
P6SMBJ8.0	KQ	8.0	8.89	11.30	1	15.0	40.0	50
P6SMBJ8.0A	KR	8.0	8.89	10.23	1	13.6	44.1	50
P6SMBJ8.5	KS	8.5	9.44	11.92	1	15.9	37.7	10
P6SMBJ8.5A	KT	8.5	9.44	10.82	1	14.4	41.7	10
P6SMBJ9.0	KU	9.0	10.00	12.60	1	16.9	35.5	5
P6SMBJ9.0A	KV	9.0	10.00	11.50	1	15.4	39.0	5
P6SMBJ10	KW	10.0	11.10	14.10	1	18.8	31.9	5
P6SMBJ10A	KX	10.0	11.10	12.80	1	17.0	35.3	5
P6SMBJ11	KY	11.0	12.20	15.40	1	20.1	29.9	5
P6SMBJ11A	KZ	11.0	12.20	14.00	1	18.2	33.0	5
P6SMBJ12	LD	12.0	13.30	16.90	1	22.0	27.3	5
P6SMBJ12A	LE	12.0	13.30	15.30	1	19.9	30.2	5
P6SMBJ13	LF	13.0	14.40	18.20	1	23.8	25.2	5
P6SMBJ13A	LG	13.0	14.40	16.50	1	21.5	27.9	5
P6SMBJ14	LH	14.0	15.60	19.80	1	25.8	23.3	5
P6SMBJ14A	LK	14.0	15.60	17.90	1	23.2	25.8	5
P6SMBJ15	LL	15.0	16.70	21.10	1	26.9	22.3	5
P6SMBJ15A	LM	15.0	16.70	19.20	1	24.4	24.0	5
P6SMBJ16	LN	16.0	17.80	22.60	1	28.8	20.8	5
P6SMBJ16A	LP	16.0	17.80	20.50	1	26.0	23.1	5
P6SMBJ17	LQ	17.0	18.90	23.90	1	30.5	19.7	5
P6SMBJ17A	LR	17.0	18.90	21.70	1	27.6	21.7	5
P6SMBJ18	LS	18.0	20.00	25.30	1	32.2	18.6	5
P6SMBJ18A	LT	18.0	20.00	23.30	1	29.2	20.5	5
P6SMBJ20	LU	20.0	22.20	28.10	1	35.8	16.7	5
P6SMBJ20A	LV	20.0	22.20	25.50	1	32.4	18.5	5
P6SMBJ22	LW	22.0	24.40	30.90	1	39.4	15.2	5
P6SMBJ22A	LX	22.0	24.40	28.00	1	35.5	16.9	5
P6SMBJ24	LY	24.0	26.70	33.80	1	43.0	14.0	5
P6SMBJ24A	LZ	24.0	26.70	30.70	1	38.9	15.4	5
P6SMBJ26	MD	26.0	28.90	36.60	1	46.6	12.4	5
P6SMBJ26A	ME	26.0	28.90	33.20	1	42.1	14.2	5
P6SMBJ28	MF	28.0	31.10	39.40	1	50.0	12.0	5
P6SMBJ28A	MG	28.0	31.10	35.80	1	45.4	13.2	5
P6SMBJ30	MH	30.0	33.30	42.20	1	53.5	11.2	5
P6SMBJ30A	MK	30.0	33.30	38.30	1	48.4	12.4	5
P6SMBJ33	ML	33.0	36.70	46.50	1	59.0	10.2	5
P6SMBJ33A	MM	33.0	36.70	42.20	1	53.3	11.3	5
P6SMBJ36	MN	36.0	40.00	50.70	1	64.3	9.3	5
P6SMBJ36A	MP	36.0	40.00	46.00	1	58.1	10.3	5
P6SMBJ40	MQ	40.0	44.40	56.30	1	71.4	8.4	5
P6SMBJ40A	MR	40.0	44.40	51.10	1	64.5	9.3	5
P6SMBJ43	MS	43.0	47.80	60.50	1	76.7	7.8	5
P6SMBJ43A	MT	43.0	47.80	54.90	1	69.4	8.6	5
P6SMBJ45	MU	45.0	50.00	63.30	1	80.3	7.5	5
P6SMBJ45A	MV	45.0	50.00	57.50	1	72.7	8.3	5
P6SMBJ48	MW	48.0	53.30	67.50	1	85.5	7.0	5
P6SMBJ48A	MX	48.0	53.30	61.30	1	77.4	7.7	5
P6SMBJ51	MY	51.0	56.70	71.80	1	91.1	6.6	5
P6SMBJ51A	MZ	51.0	56.70	65.20	1	82.4	7.3	5
P6SMBJ54	ND	54.0	60.00	76.00	1	96.3	6.2	5
P6SMBJ54A	NE	54.0	60.00	69.00	1	87.1	6.9	5
P6SMBJ58	NF	58.0	64.40	81.60	1	103.0	5.8	5
P6SMBJ58A	NG	58.0	64.40	74.10	1	93.6	6.4	5
P6SMBJ60	NH	60.0	66.70	84.50	1	107.0	5.6	5
P6SMBJ60A	NK	60.0	66.70	76.70	1	96.8	6.2	5
P6SMBJ64	NL	64.0	71.10	90.10	1	114.0	5.3	5
P6SMBJ64A	NM	64.0	71.10	81.80	1	103.0	5.8	5
P6SMBJ70	NN	70.0	77.80	98.60	1	125.0	4.8	5
P6SMBJ70A	NP	70.0	77.80	89.50	1	113.0	5.3	5
P6SMBJ75	NQ	75.0	83.30	105.70	1	134.0	4.5	5
P6SMBJ75A	NR	75.0	83.30	95.80	1	121.0	4.9	5
P6SMBJ78	NS	78.0	86.70	109.80	1	139.0	4.3	5
P6SMBJ78A	NT	78.0	86.70	99.70	1	126.0	4.7	5
P6SMBJ85	NU	85.0	94.40	119.20	1	151.0	3.9	5
P6SMBJ85A	NV	85.0	94.40	108.20	1	137.0	4.4	5
P6SMBJ90	NW	90.0	100.00	126.50	1	160.0	3.8	5
P6SMBJ90A	NX	90.0	100.00	115.50	1	146.0	4.1	5
P6SMBJ100	NY	100.0	111.00	141.00	1	179.0	3.4	5
P6SMBJ100A	NZ	100.0	111.00	128.00	1	162.0	3.7	5
P6SMBJ110	PD	110.0	122.00	154.50	1	196.0	3.0	5
P6SMBJ110A	PE	110.0	122.00	140.50	1	177.0	3.4	5
P6SMBJ120	PF	120.0	133.00	169.00	1	214.0	2.8	5
P6SMBJ120A	PG	120.0	133.00	153.00	1	193.0	3.1	5
P6SMBJ130	PH	130.0	144.00	182.50	1	231.0	2.6	5
P6SMBJ130A	PK	130.0	144.00	165.50	1	209.0	2.9	5
P6SMBJ150	PL	150.0	167.00	211.50	1	268.0	2.2	5
P6SMBJ150A	PM	150.0	167.00	192.50	1	243.0	2.5	5
P6SMBJ160	PN	160.0	178.00	226.00	1	287.0	2.1	5
P6SMBJ160A	PP	160.0	178.00	205.00	1	259.0	2.3	5
P6SMBJ170	PQ	170.0	189.00	239.50	1	304.0	2.0	5
P6SMBJ170A	PR	170.0	189.00	217.50	1	275.0	2.2	5

SURGE COMPONENTS, INC. 1016 GRAND BLVD., DEER PARK, NY 11729
PHONE (631) 595-1818 FAX (631) 595-1283 www.surgecomponents.com

SURGE

QUALITY ON BOARD

BI-DIRECTIONAL 600 Watt Surface Mount TVS

BI-DIRECTIONAL PART NUMBER	DEVICE MARKING CODE	REVERSE STAND-OFF VOLTAGE VRWM (V)	BREAKDOWN VOLTAGE VBR (V) MIN. @ IT	BREAKDOWN VOLTAGE VBR (V) MAX. @ IT	TEST CURRENT IT (mA)	MAXIMUM CLAMPING VOLTAGE @Ipp Vc (V)	PEAK PULSE CURRENT Ipp (A)	REVERSE LEAKAGE @VRWM IR (uA)
P6SMBJ5.0C	AD	5.0	6.40	7.55	10	9.6	62.5	1600
P6SMBJ5.0CA	AE	5.0	6.40	7.25	10	9.2	65.2	1600
P6SMBJ6.0C	AF	6.0	6.67	8.45	10	11.4	52.6	1600
P6SMBJ6.0CA	AG	6.0	6.67	7.67	10	10.3	58.3	1600
P6SMBJ6.5C	AH	6.5	7.22	9.14	10	12.3	48.7	1000
P6SMBJ6.5CA	AK	6.5	7.22	8.30	10	11.2	53.6	1000
P6SMBJ7.0C	AL	7.0	7.78	9.86	10	13.3	45.1	400
P6SMBJ7.0CA	AM	7.0	7.78	8.95	10	12.0	50.0	400
P6SMBJ7.5C	AN	7.5	8.33	10.67	1	14.3	42.0	200
P6SMBJ7.5CA	AP	7.5	8.33	9.58	1	12.9	46.5	200
P6SMBJ8.0C	AQ	8.0	8.89	11.30	1	15.0	40.0	100
P6SMBJ8.0CA	AR	8.0	8.89	10.23	1	13.6	44.1	100
P6SMBJ8.5C	AS	8.5	9.44	11.92	1	15.9	37.7	20
P6SMBJ8.5CA	AT	8.5	9.44	10.82	1	14.4	41.7	20
P6SMBJ9.0C	AU	9.0	10.00	12.60	1	16.9	35.5	10
P6SMBJ9.0CA	AV	9.0	10.00	11.50	1	15.4	39.0	10
P6SMBJ10C	AW	10.0	11.10	14.10	1	18.8	31.9	5
P6SMBJ10CA	AX	10.0	11.10	12.80	1	17.0	35.3	5
P6SMBJ11C	AY	11.0	12.20	15.40	1	20.1	29.9	5
P6SMBJ11CA	AZ	11.0	12.20	14.00	1	18.2	33.0	5
P6SMBJ12C	BD	12.0	13.30	16.90	1	22.0	27.3	5
P6SMBJ12CA	BE	12.0	13.30	15.30	1	19.9	30.2	5
P6SMBJ13C	BF	13.0	14.40	18.20	1	23.8	25.2	5
P6SMBJ13CA	BG	13.0	14.40	16.50	1	21.5	27.9	5
P6SMBJ14C	BH	14.0	15.60	19.80	1	25.8	23.3	5
P6SMBJ14CA	BK	14.0	15.60	17.90	1	23.2	25.8	5
P6SMBJ15C	BL	15.0	16.70	21.10	1	26.9	22.3	5
P6SMBJ15CA	BM	15.0	16.70	19.20	1	24.4	24.0	5
P6SMBJ16C	BN	16.0	17.80	22.60	1	28.8	20.8	5
P6SMBJ16CA	BP	16.0	17.80	20.50	1	26.0	23.1	5
P6SMBJ17C	BQ	17.0	18.90	23.90	1	30.5	19.7	5
P6SMBJ17CA	BR	17.0	18.90	21.70	1	27.6	21.7	5
P6SMBJ18C	BS	18.0	20.00	25.30	1	32.2	18.6	5
P6SMBJ18CA	BT	18.0	20.00	23.30	1	29.2	20.5	5
P6SMBJ20C	BU	20.0	22.20	28.10	1	35.8	16.7	5
P6SMBJ20CA	BV	20.0	22.20	25.50	1	32.4	18.5	5
P6SMBJ22C	BW	22.0	24.40	30.90	1	39.4	15.2	5
P6SMBJ22CA	BX	22.0	24.40	28.00	1	35.5	16.9	5
P6SMBJ24C	BY	24.0	26.70	33.80	1	43.0	14.0	5
P6SMBJ24CA	BZ	24.0	26.70	30.70	1	38.9	15.4	5
P6SMBJ26C	CD	26.0	28.90	36.60	1	46.6	12.4	5
P6SMBJ26CA	CE	26.0	28.90	33.20	1	42.1	14.2	5
P6SMBJ28C	CF	28.0	31.10	39.40	1	50.0	12.0	5
P6SMBJ28CA	CG	28.0	31.10	35.80	1	45.4	13.2	5
P6SMBJ30C	CH	30.0	33.30	42.20	1	53.5	11.2	5
P6SMBJ30CA	CK	30.0	33.30	38.30	1	48.4	12.4	5
P6SMBJ33C	CL	33.0	36.70	46.50	1	59.0	10.2	5
P6SMBJ33CA	CM	33.0	36.70	42.20	1	53.3	11.3	5
P6SMBJ36C	CN	36.0	40.00	50.70	1	64.3	9.3	5
P6SMBJ36CA	CP	36.0	40.00	46.00	1	58.1	10.3	5
P6SMBJ40C	CQ	40.0	44.40	56.30	1	71.4	8.4	5
P6SMBJ40CA	CR	40.0	44.40	51.10	1	64.5	9.3	5
P6SMBJ43C	CS	43.0	47.80	60.50	1	76.7	7.8	5
P6SMBJ43CA	CT	43.0	47.80	54.90	1	69.4	8.6	5
P6SMBJ45C	CU	45.0	50.00	63.30	1	80.3	7.5	5
P6SMBJ45CA	CV	45.0	50.00	57.50	1	72.7	8.3	5
P6SMBJ48C	CW	48.0	53.30	67.50	1	85.5	7.0	5
P6SMBJ48CA	CX	48.0	53.30	61.30	1	77.4	7.7	5
P6SMBJ51C	CY	51.0	56.70	71.80	1	91.1	6.6	5
P6SMBJ51CA	CZ	51.0	56.70	65.20	1	82.4	7.3	5
P6SMBJ54C	DD	54.0	60.00	76.00	1	96.3	6.2	5
P6SMBJ54CA	DE	54.0	60.00	69.00	1	87.1	6.9	5
P6SMBJ58C	DF	58.0	64.40	81.60	1	103.0	5.8	5
P6SMBJ58CA	DG	58.0	64.40	74.10	1	93.6	6.4	5
P6SMBJ60C	DH	60.0	66.70	84.50	1	107.0	5.6	5
P6SMBJ60CA	DK	60.0	66.70	76.70	1	96.8	6.2	5
P6SMBJ64C	DL	64.0	71.10	90.10	1	114.0	5.3	5
P6SMBJ64CA	DM	64.0	71.10	81.80	1	103.0	5.8	5
P6SMBJ70C	DN	70.0	77.80	98.60	1	125.0	4.8	5
P6SMBJ70CA	DP	70.0	77.80	89.50	1	113.0	5.3	5
P6SMBJ75C	DQ	75.0	83.30	105.70	1	134.0	4.5	5
P6SMBJ75CA	DR	75.0	83.30	95.80	1	121.0	4.9	5
P6SMBJ78C	DS	78.0	86.70	109.80	1	139.0	4.3	5
P6SMBJ78CA	DT	78.0	86.70	99.70	1	126.0	4.7	5
P6SMBJ85C	DU	85.0	94.40	119.20	1	151.0	3.9	5
P6SMBJ85CA	DV	85.0	94.40	108.20	1	137.0	4.4	5
P6SMBJ90C	DW	90.0	100.00	126.50	1	160.0	3.8	5
P6SMBJ90CA	DX	90.0	100.00	115.50	1	146.0	4.1	5
P6SMBJ100C	DY	100.0	111.00	141.00	1	179.0	3.4	5
P6SMBJ100CA	DZ	100.0	111.00	128.00	1	162.0	3.7	5
P6SMBJ110C	ED	110.0	122.00	154.50	1	196.0	3.0	5
P6SMBJ110CA	EE	110.0	122.00	140.50	1	177.0	3.4	5
P6SMBJ120C	EF	120.0	133.00	169.00	1	214.0	2.8	5
P6SMBJ120CA	EG	120.0	133.00	153.00	1	193.0	3.1	5
P6SMBJ130C	EH	130.0	144.00	182.50	1	231.0	2.6	5
P6SMBJ130CA	EK	130.0	144.00	165.50	1	209.0	2.9	5
P6SMBJ150C	EL	150.0	167.00	211.50	1	268.0	2.2	5
P6SMBJ150CA	EM	150.0	167.00	192.50	1	243.0	2.5	5
P6SMBJ160C	EN	160.0	178.00	226.00	1	287.0	2.1	5
P6SMBJ160CA	EP	160.0	178.00	205.00	1	259.0	2.3	5
P6SMBJ170C	EQ	170.0	189.00	239.50	1	304.0	2.0	5
P6SMBJ170CA	ER	170.0	189.00	217.50	1	275.0	2.2	5

SURGE COMPONENTS, INC. 1016 GRAND BLVD., DEER PARK, NY 11729
PHONE (631) 595-1818 FAX (631) 595-1283 www.surgecomponents.com