SERVICE MANUAL

D900C / D901C

notebook

Datasheet Directory

Notebook Computer

D900C/D901C

Service Manual

Notice

The company reserves the right to revise this publication or to change its contents without notice. Information contained herein is for reference only and does not constitute a commitment on the part of the manufacturer or any subsequent vendor. They assume no responsibility or liability for any errors or inaccuracies that may appear in this publication nor are they in anyway responsible for any loss or damage resulting from the use (or misuse) of this publication.

This publication and any accompanying software may not, in whole or in part, be reproduced, translated, transmitted or reduced to any machine readable form without prior consent from the vendor, manufacturer or creators of this publication, except for copies kept by the user for backup purposes.

Brand and product names mentioned in this publication may or may not be copyrights and/or registered trademarks of their respective companies. They are mentioned for identification purposes only and are not intended as an endorsement of that product or its manufacturer.

Version 1.0
June 2007

Trademarks

Intel and **Intel Core** are trademarks/registered trademarks of Intel Corporation.
Windows® is a registered trademark of Microsoft Corporation.
Other brand and product names are trademarks and./or registered trademarks of their respective companies.

About this Manual

This manual is intended for service personnel who have completed sufficient training to undertake the maintenance and inspection of personal computers.

It is organized to allow you to look up basic information for servicing and/or upgrading components of the ***D900C/ D901C*** series notebook PC.

The following information is included:

Chapter 1, Introduction, provides general information about the location of system elements and their specifications.
Chapter 2, Disassembly, provides step-by-step instructions for disassembling parts and subsystems and how to upgrade elements of the system.

Appendix A, Part Lists
Appendix B, Schematic Diagrams

IMPORTANT SAFETY INSTRUCTIONS

Follow basic safety precautions, including those listed below, to reduce the risk of fire, electric shock and injury to persons when using any electrical equipment:

1. Do not use this product near water, for example near a bath tub, wash bowl, kitchen sink or laundry tub, in a wet basement or near a swimming pool.
2. Avoid using a telephone (other than a cordless type) during an electrical storm. There may be a remote risk of electrical shock from lightning.
3. Do not use the telephone to report a gas leak in the vicinity of the leak.
4. Use only the power cord and batteries indicated in this manual. Do not dispose of batteries in a fire. They may explode. Check with local codes for possible special disposal instructions.
5. This product is intended to be supplied by a Listed Power Unit (Full Range **220W** AC/DC Adapter – AC Input 100 - 240V, 50 - 60Hz DC Output 20V, 11A).

CAUTION

Always disconnect all telephone lines from the wall outlet before servicing or disassembling this equipment.

TO REDUCE THE RISK OF FIRE, USE ONLY NO. 26 AWG OR LARGER, TELECOMMUNICATION LINE CORD

This Computer's Optical Device is a Laser Class 1 Product

Instructions for Care and Operation

The notebook computer is quite rugged, but it can be damaged. To prevent this, follow these suggestions:

1. **Don't drop it, or expose it to shock.** If the computer falls, the case and the components could be damaged.

Do not expose the computer to any shock or vibration.	*Do not place it on an unstable surface.*	*Do not place anything heavy on the computer.*
		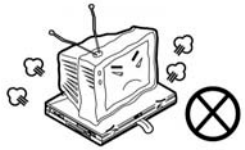

2. **Keep it dry, and don't overheat it.** Keep the computer and power supply away from any kind of heating element. This is an electrical appliance. If water or any other liquid gets into it, the computer could be badly damaged.

Do not expose it to excessive heat or direct sunlight.	*Do not leave it in a place where foreign matter or moisture may affect the system.*	*Don't use or store the computer in a humid environment.*	*Do not place the computer on any surface which will block the vents.*

3. **Follow the proper working procedures for the computer**. Shut the computer down properly and don't forget to save your work. Remember to periodically save your data as data may be lost if the battery is depleted.

Do not turn off the power until you properly shut down all programs.	*Do not turn off any peripheral devices when the computer is on.*	*Do not disassemble the computer by yourself.*	*Perform routine maintenance on your computer.*

4. **Avoid interference.** Keep the computer away from high capacity transformers, electric motors, and other strong magnetic fields. These can hinder proper performance and damage your data.
5. **Take care when using peripheral devices**.

Use only approved brands of peripherals.	*Unplug the power cord before attaching peripheral devices.*
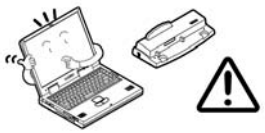	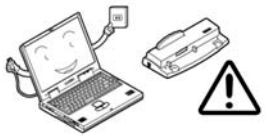

Power Safety

The computer has specific power requirements:

- Only use a power adapter approved for use with this computer.
- Your AC adapter may be designed for international travel but it still requires a steady, uninterrupted power supply. If you are unsure of your local power specifications, consult your service representative or local power company.
- The power adapter may have either a 2-prong or a 3-prong grounded plug. The third prong is an important safety feature; do not defeat its purpose. If you do not have access to a compatible outlet, have a qualified electrician install one.
- When you want to unplug the power cord, be sure to disconnect it by the plug head, not by its wire.
- Make sure the socket and any extension cord(s) you use can support the total current load of all the connected devices.
- Before cleaning the computer, make sure it is disconnected from any external power supplies.

Power Safety Warning

Before you undertake any upgrade procedures, make sure that you have turned off the power, and disconnected all peripherals and cables (including telephone lines). It is advisable to also remove your battery in order to prevent accidentally turning the machine on.

Do not plug in the power cord if you are wet.	*Do not use the power cord if it is broken.*	*Do not place heavy objects on the power cord.*
	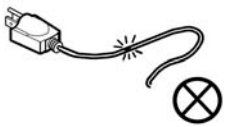	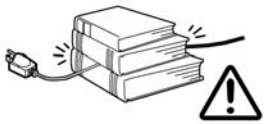

Battery Precautions

- Only use batteries designed for this computer. The wrong battery type may explode, leak or damage the computer.
- Do not continue to use a battery that has been dropped, or that appears damaged (e.g. bent or twisted) in any way. Even if the computer continues to work with a damaged battery in place, it may cause circuit damage, which may possibly result in fire.
- Recharge the batteries using the notebook's system. Incorrect recharging may make the battery explode.
- Do not try to repair a battery pack. Refer any battery pack repair or replacement to your service representative or qualified service personnel.
- Keep children away from, and promptly dispose of a damaged battery. Always dispose of batteries carefully. Batteries may explode or leak if exposed to fire, or improperly handled or discarded.
- Keep the battery away from metal appliances.
- Affix tape to the battery contacts before disposing of the battery.
- Do not touch the battery contacts with your hands or metal objects.

Battery Disposal

The product that you have purchased contains a rechargeable battery. The battery is recyclable. At the end of its useful life, under various state and local laws, it may be illegal to dispose of this battery into the municipal waste stream. Check with your local solid waste officials for details in your area for recycling options or proper disposal.

Caution

Danger of explosion if battery is incorrectly replaced. Replace only with the same or equivalent type recommended by the manufacturer. Discard used battery according to the manufacturer's instructions.

Related Documents

You may also need to consult the following manual for additional information:

User's Manual on CD
This describes the notebook PC's features and the procedures for operating the computer and its ROM-based setup program. It also describes the installation and operation of the utility programs provided with the notebook PC.

Contents

Introduction 1-1

Overview 1-1
System Specifications 1-2
External Locator - Top View with LCD Panel Open 1-6
External Locator - Front & Rear Views 1-7
External Locator - Left & Right Side View 1-8
External Locator - Bottom View 1-9
Mainboard Overview - Top (Key Parts) 1-10
Mainboard Overview - Bottom (Key Parts) 1-11
Mainboard Overview - Top (Connectors) 1-12
Mainboard Overview - Bottom (Connectors) 1-13

Disassembly 2-1

Overview 2-1
Maintenance Tools 2-2
Connections 2-2
Maintenance Precautions 2-3
Disassembly Steps 2-4
Removing the Battery 2-5
Removing the Optical (CD/DVD) Device 2-6
Removing the Hard Disk Drive 2-7
Removing the System Memory (RAM) 2-9
Removing the Processor 2-11
Removing the VGA Card 2-12
Installing the VGA Card 2-14
Removing the Keyboard 2-15
Removing the Wireless LAN Module 2-16
Removing the Bluetooth Module 2-17
Removing the Modem 2-18
Removing the TV Tuner Card 2-19

Part Lists A-1

Part List Illustration Location A-2
TOP (D900C/D901C) A-3
BOTTOM (D900C/D901C) A-4
LCD (D900C/D901C) A-5
MB - One VGA only (D900C/D901C) A-6
MB (D900C/D901C) A-7
HDD (D900C/D901C) A-8
2nd HDD (D900C/D901C) A-9
COMBO (D900C/D901C) A-10
DVD-DUAL RW (D900C/D901C) A-11

Schematic Diagrams.....B-1

BLOCK DIAGRAM B-2
CLOCK GENERATOR B-3
CPU-1 .....B-4
CPU-2 .....B-5
Intel P965 CPU Interface 1/4 .....B-6
Intel P965 PCI- E I/F 2/4 .....B-7
Intel P965 Memory I/F 3/4 .....B-8
DDRII SODIMM B-9
Intel P965 Power 4/4 .....B-10
ICH8 PCI, DMI, CPU, IRQ B-11
ICH8 LPC, ATA, USB, GPIO B-12
ICH8 Power B-13
MXM PCI-E CON1 .....B-14
MXM PCI-E CON2 .....B-15
BR03 PCI-E & Straps 1/3 .....B-16
BR03 PCI-E Interface 2/3 .....B-17
BR03 Power & GND 3/3 .....B-18

DVI/ CRT B-19
Panel CON/ LED Indicator B-20
1394/ Card Reader (TI PCI7402) B-21
GLAN RTL8111B B-22
Audio ALC888/ Amplifier B-23
KBC-H8/2111 ..... B-24
JM368 PCIE to PATA B-25
Mini Card & TV Out/ Video In B-26
Daughter Connection B-27
CCD/ BT/ FAN/ ROM B-28
Mini PCI/ MDC/ New Card B-29
AC-In, Charger B-30
Power 1.2V/ 1.25V B-31
Power 1.5V/ 1.05V/ 2.5V B-32
Power 1.8V/ 0.9V/ 12V B-33
Power 3.3V/ 5V B-34
VCore Power B-35
Audio Board B-36
Card Reader Board B-37
Click Board B-38
HotKey Board B-39
Switch Board B-40
USB Board B-41

1: Introduction

Overview

This manual covers the information you need to service or upgrade the ***D900C/D901C*** series notebook computer. Information about operating the computer (e.g. getting started, and the *Setup* utility) is in the *User's Manual*. Information about drivers (e.g. VGA & audio) is also found in *User's Manual*. That manual is shipped with the computer.

Operating systems (e.g. *Windows XP, Windows Vista,* etc.) have their own manuals as do application software (e.g. word processing and database programs). If you have questions about those programs, you should consult those manuals.

The ***D900C/D901C*** series notebook is designed to be upgradeable. See ***"Disassembly" on page 2 - 1*** for a detailed description of the upgrade procedures for each specific component. Please note the warning and safety information indicated by the " " symbol.

The balance of this chapter reviews the computer's technical specifications and features.

System Specifications

Feature	Specification	
Processor Types	Intel® Core™ 2 Duo Processor LGA775 Package (775-pin) **E6300**/ **E6400**	65nm (65 Nanometer) Process Technology 2MB On-die L2 Cache & 1066MHz FSB 1.86/ 2.13 GHz
	Intel® Core™ 2 Duo Processor LGA775 Package (775-pin) E6600/ E6700	65nm (65 Nanometer) Process Technology 4MB On-die L2 Cache & 1066MHz FSB 2.40/ 2.66 GHz
	Intel® Core™ 2 Extreme Processor LGA775 Package (775-pin) X6800	65nm (65 Nanometer) Process Technology 4MB On-die L2 Cache & 1066MHz FSB 2.93 GHz
Core Logic	Intel P965 + ICH8-R	
LCD	17" Glare Type Flat Panel TFT (For **One** of the Following Options) WXGA (1440 * 900) OR WSXGA+ (1680 * 1050) OR WUXGA (1920 * 1200)	
Security	Security (Kensington® Type) Lock Slot	BIOS Password TPM Supported
Memory	Two 200 Pin SO-DIMM Sockets Supporting **DDRII (DDR2)** 533/667/800 MHz 64-bit Wide **DDRII (DDR2)** Data Channels Memory Expandable up to 4GB (512/ 1024/ 2048 MB **DDRII** Modules) (**Note**: Do Not Use Other Module Types)	
BIOS	One 16Mbit Flash ROM	Phoenix BIOS

Feature	Specification
Video Card	**NVIDIA GeForceGo 7950 GTX (G71GM-UU +MXM IV)** **SLI Module** PCI-Express Video Card **Windows Vista SLI Support** At the time of going to press ***Windows Vista*** did not support more than one SLI video card. Check with your service center for the latest information. **Video Card Options** Note that card types, specifications and drivers are subject to continual updates and changes. Check with your service center for the latest details on video cards supported.
Storage Options	One Changeable 12.7 mm (h) Optical Device Drive Bay (see *"Optional" on page 1 - 5*) Up to Three Changeable 9.5 mm (h) SATA II Hard Disk Drives Supports RAID 0, RAID 1, RAID 5 HDD Fault Tolerance System **(Optional)** External USB 1.44MB Floppy Disk Drive
Card Reader	Embedded 7-in-1 Card Reader (MS/ MS Pro/ SD/ Mini SD/ MMC/ RS MMC/ MS Duo) **Note:** MS Duo/ Mini SD/ RS MMC Cards Require a PC Adapter
Audio	UAA (Universal Audio Architecture) Integrated Azalia Compliant Interface S/PDIF Digital Output Built-In Microphone 4 * Built-In Speakers
Keyboard & Pointing Device	Full Size Winkey Keyboard with Numeric Keypad Two Game Hot Keys Built-In TouchPad (Scroll Functionality Included)
ExpressCard Slot	ExpressCard/34/54 Slot

Feature	Specification	
I/O Ports	Four USB 2.0 Ports One Mini-IEEE1394 Port One S-Video-Out Jack for TV & HDTV Output One DVI-Out Port (with DVI-Dual Link Support) One External Monitor Port One Headphone/Speaker-Out Jack One Microphone-In Jack One S/PDIF Out Jack One Line-In Jack for Audio Input	One RJ-11 Modem Jack One RJ-45 Gigabit LAN Jack One DC-In Jack One CATV Antenna (Analog/Digital) Jack (Functions with **Optional** TV Tuner Module) One S-Video-In Jack (Functions with **Optional** TV Tuner Module) One Consumer Infrared Transceiver (Functions with **Optional** TV Tuner Module)
Communication	AZALIA MDC 56K Modem (V.90 & V.92 Compliant) 1GB PCIe Fast Ethernet LAN Module Intel PRO/Wireless 3945ABG PCIe Wireless LAN Module (**Option**) Intel PRO/Wireless 4965AGN PCIe Wireless LAN Module (**Option**)	USB 2.0 Bluetooth Class II Module (**Option**) 1.3M Pixel USB 2.0 PC Camera Module (**Factory Option**)
Operating Systems Supported	Windows XP SP2	Windows Vista 64bit Home Premium/ Business/ Enterprise/ Ultimate
Power Management	Supports ACPI 2.0 Battery Low Suspend Supports Resume from Modem Ring	Supports Suspend to RAM (S3) Supports Suspend to Disk (S4)
Power	Full Range **220W** AC/DC Adapter – AC Input 100 - 240V, 50 - 60Hz, DC Output 20V, 11A Easy Changeable 12-Cell Smart Lithium-Ion 6600mAH	
Environmental Spec	**Temperature** Operating: 5°C ~ 35°C Non-Operating: -20°C ~ 60°C	**Relative Humidity** Operating: 20% ~ 80% Non-Operating: 10% ~ 90%

Feature	Specification	
Physical Dimensions & Weight	397mm (w) * 298mm (d) * 51 ~ 60mm (h)	5.4kg
Optional	Optical Drive Module Options: DVD-Super Multi Drive Module External USB 1.44MB Floppy Disk Drive Analog TV Tuner Module with Mini-PCI Interface OR Hybrid TV Tuner Module with Mini-PCI Interface	Intel PRO/Wireless 3945ABG PCIe Wireless LAN Module OR Intel PRO/Wireless 4965AGN PCIe Wireless LAN Module USB 2.0 Bluetooth Class II Module 1.3M Pixel USB 2.0 PC Camera Module (**Factory Option**) DVD Player Software

External Locator - Top View with LCD Panel Open

Figure 1
Top View

1. Optional Built-In PC Camera
2. LCD
3. LED Power & Communication Indicators
4. Built-In Microphone
5. LED Status Indicators
6. Hot Key Buttons
7. Power Button
8. Keyboard
9. Speakers
10. Game Hot Keys
11. TouchPad and Buttons

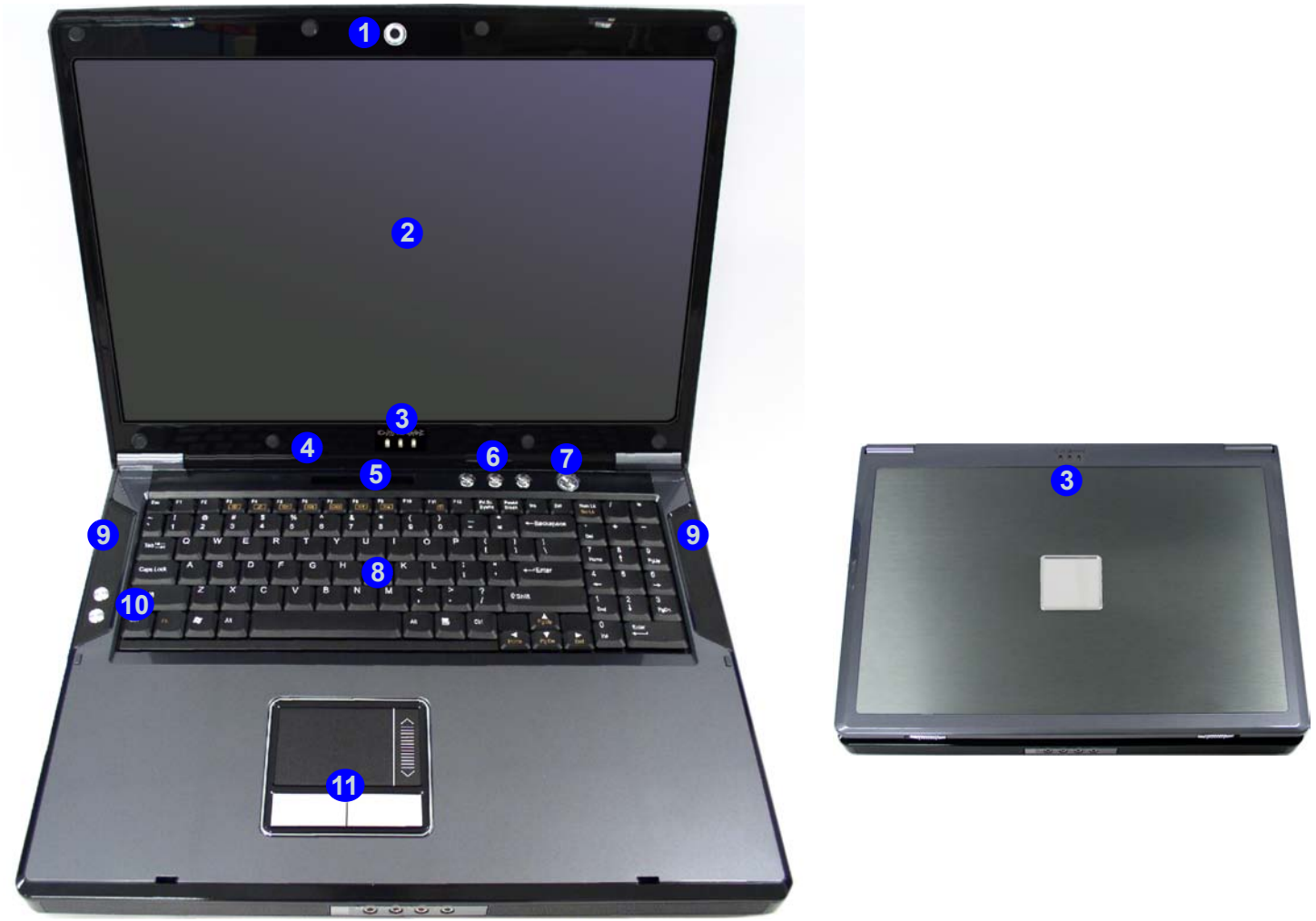

External Locator - Front & Rear Views

Figure 2
Front Views

1. LCD Latches
2. Line-In Jack
3. S/PDIF-Out Jack
4. Microphone-In Jack
5. Headphone-Out Jack
6. Speakers

Figure 3
Rear Views

1. Vent/Fan Intake
2. DC-In Jack
3. DVI-Out Port
4. S-Video-In Jack*

*Enabled with **Optional** Mini-PCI TV Tuner Only

External Locator - Left & Right Side View

Figure 4
Left Side View

1. External Monitor Port
2. S-Video-Out Jack
3. Cable (CATV) Antenna Jack
4. RJ-11 Phone Jack
5. RJ-45 LAN Jack
6. Mini-IEEE 1394 Port
7. Express Card Slot
8. Optical Device Drive Bay (for CD/DVD Device)
9. 7-in-1 Card Reader

Figure 5
Right Side View

1. USB Ports
2. Security Lock Slot

External Locator - Bottom View

Figure 6
Bottom View

1. Battery (Secondary HDD Bay - HDD3)
2. Fan Outlet/Intake
3. Primary HDD Bay (HDD1 & HDD2)
4. Component Bay Cover

Overheating

To prevent your computer from overheating make sure nothing blocks the vent/fan intakes while the computer is in use.

Mainboard Overview - Top (Key Parts)

Figure 7
Mainboard Top Key Parts

1. WLAN Module Socket
2. TV Module Socket
3. SLI Chip (BR03)
4. Northbridge (P965)
5. Southbridge (ICH8R)

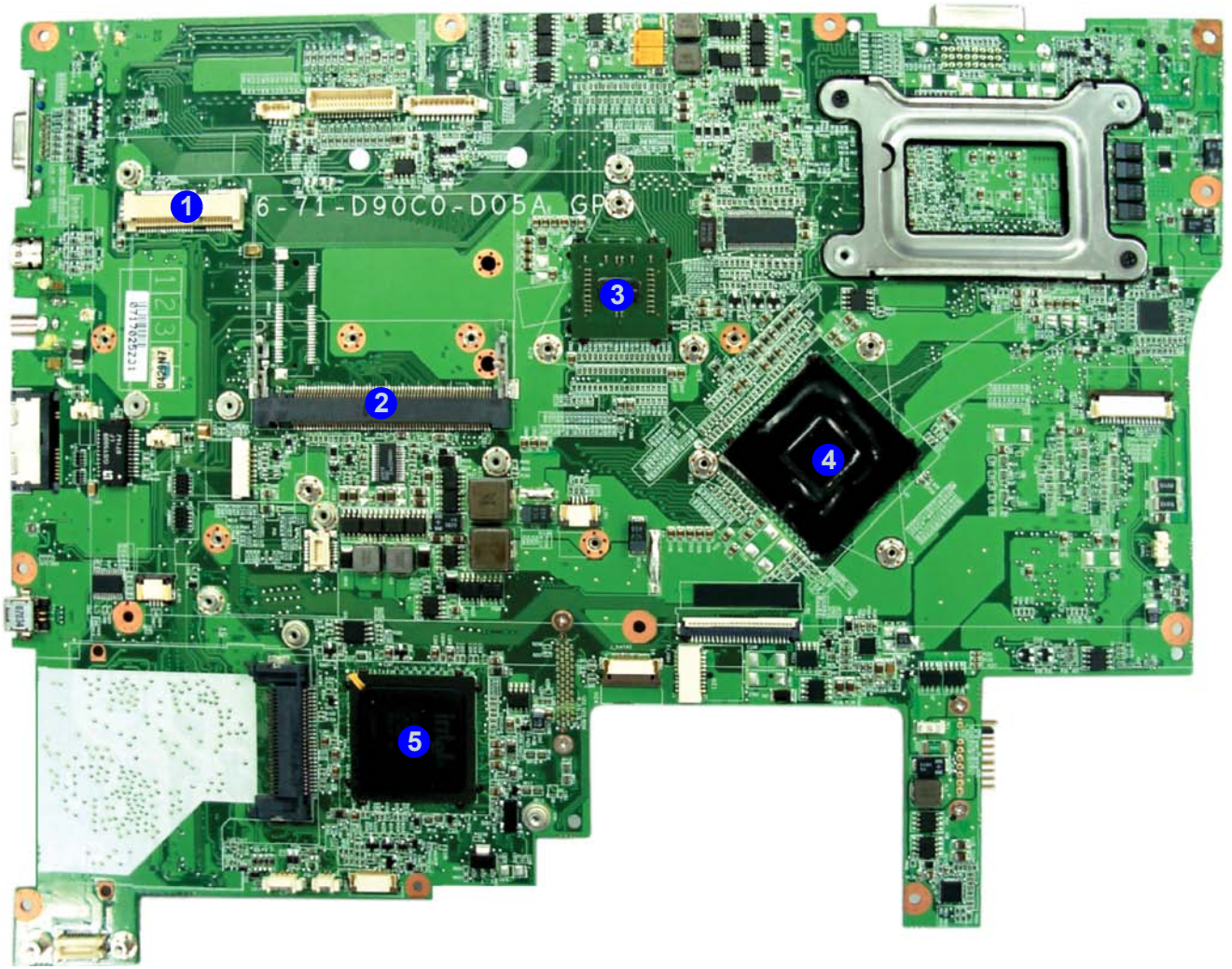

Mainboard Overview - Bottom (Key Parts)

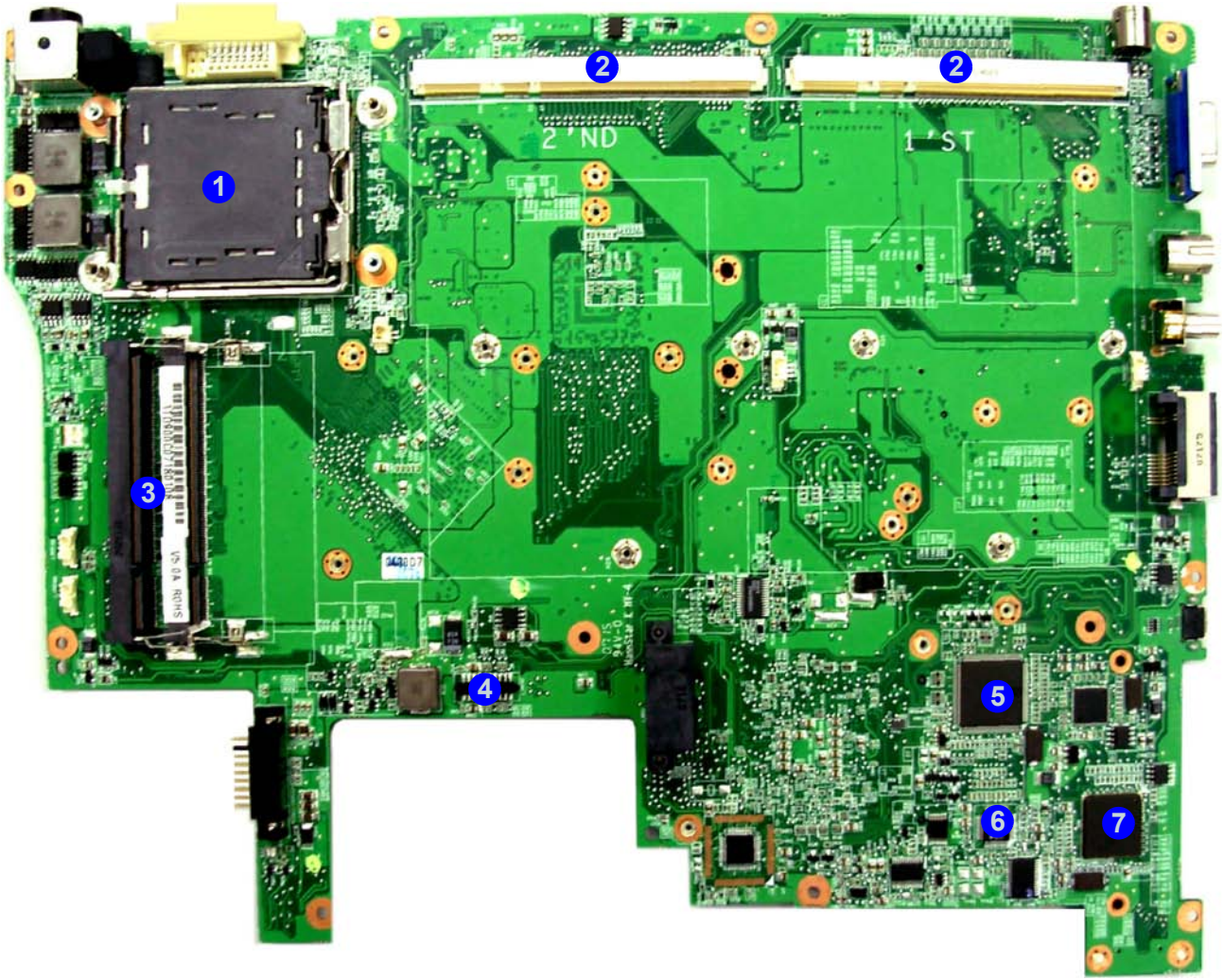

Figure 8
Mainboard Bottom Key Parts

1. CPU Socket (no CPU installed)
2. VGA sockets
3. Memory Slots DDR So-DIMM
4. HDD Socket
5. KBC IC (H8S/2111BV)
6. Audio Codec IC (ALC883)
7. IEEE1394/Card Reader IC (PCI7402)

Mainboard Overview - Top (Connectors)

Figure 9
Mainboard Top Connectors

1. CCD Cable Connector
2. LCD Connector
3. LED Connector
4. Wire Cable 2Pin Connector (M/B to MDC Module)
5. SPK 1 Connector
6. Bluetooth Module Connector
7. MDC Module Connector
8. AP-Key Cable Connector
9. Touch Pad Connector
10. SW1 Connector
11. SPK 2 Connector
12. Keyboard Cable Connector
13. USB Cable Connector
14. Audio Cable Connector
15. RTC Battery Connector
16. SPK Sub Cable Connector
17. Card Reader Board Connector

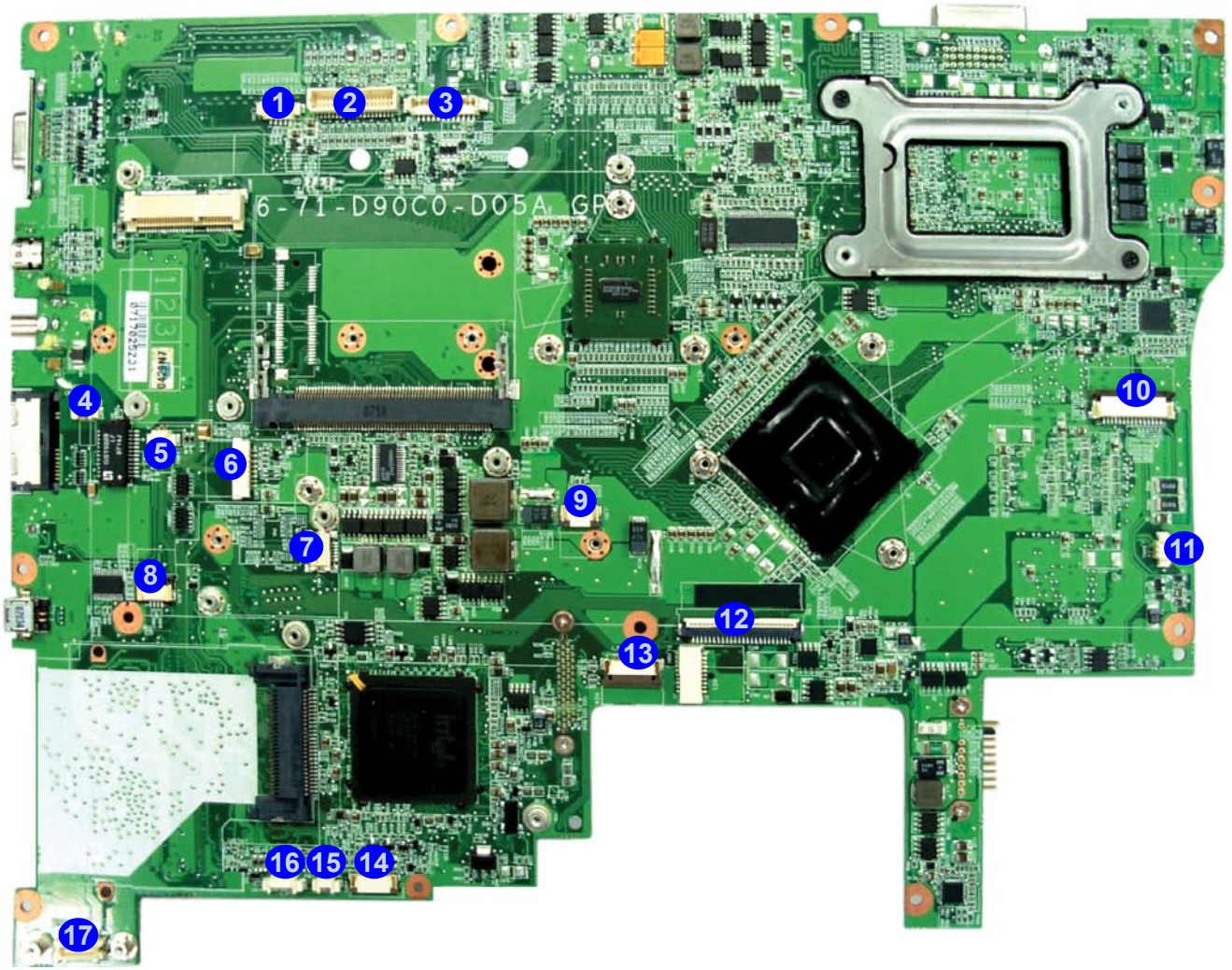

Mainboard Overview - Bottom (Connectors)

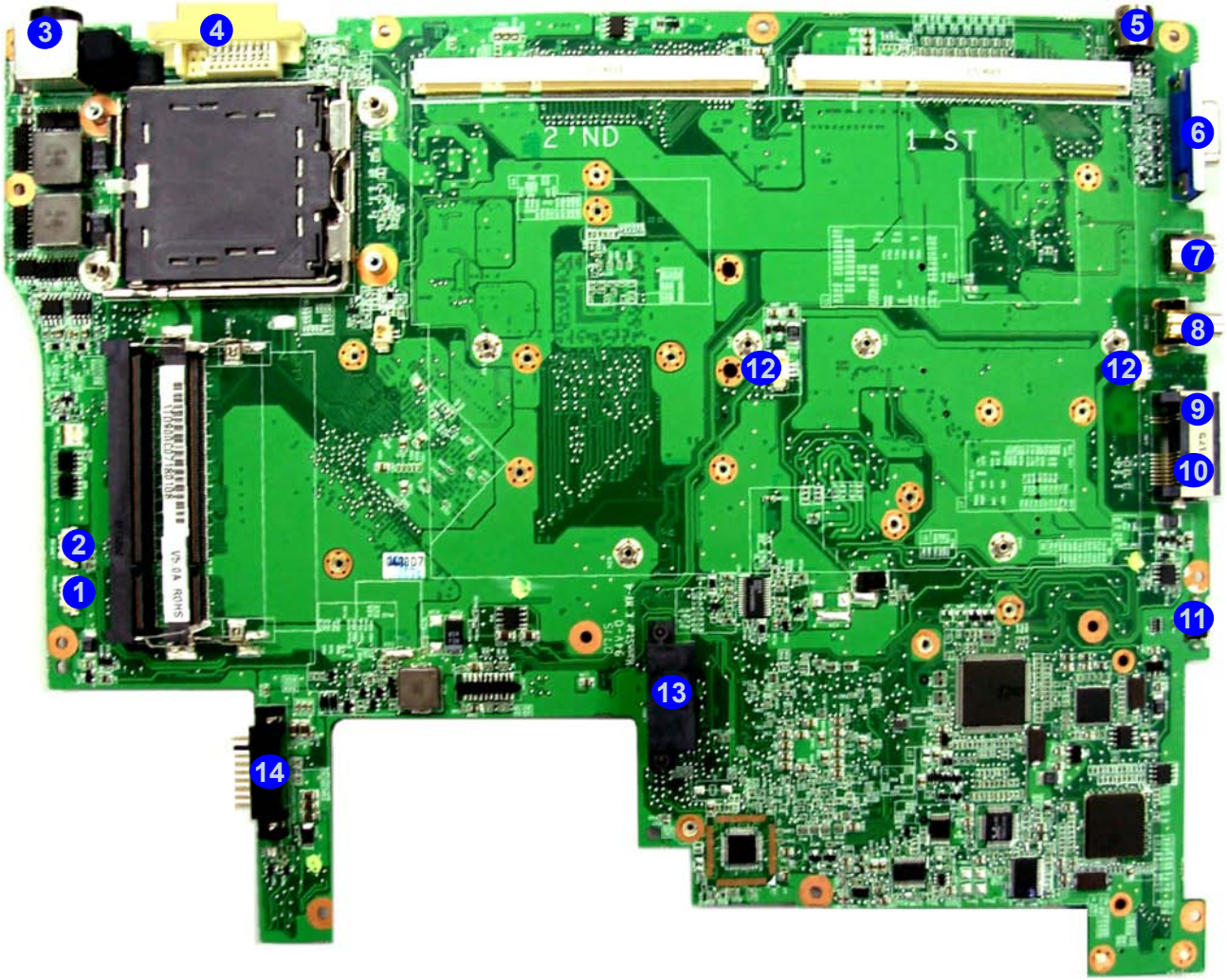

Figure 10
Mainboard Bottom Connectors

1. CPU Fan Cable Connector
2. RAM Fan Cable Connector
3. DC-In Jack
4. DVI-Out Port
5. S-Video-In Jack
6. Serial Port
7. S-Video-Out Jack
8. CATV Jack*
9. RJ-11 Phone Jack
10. RJ-45 LAN Jack
11. 1394a Connector
12. VGA Fan Cable Connector
13. Optical Device Connector
14. Battery Connector

2: Disassembly

Overview

This chapter provides step-by-step instructions for disassembling the ***D900C/D901C*** series notebook's parts and sub-systems. When it comes to reassembly, reverse the procedures (unless otherwise indicated).

We suggest you completely review any procedure before you take the computer apart.

Procedures such as upgrading/replacing the RAM, CD device and hard disk are included in the User's Manual but are repeated here for your convenience.

To make the disassembly process easier each section may have a box in the page margin. Information contained under the figure # will give a synopsis of the sequence of procedures involved in the disassembly procedure. A box with a lists the relevant parts you will have after the disassembly process is complete. **Note**: The parts listed will be for the disassembly procedure listed ONLY, and not any previous disassembly step(s) required. Refer to the part list for the previous disassembly procedure. The amount of screws you should be left with will be listed here also.

A box with a will also provide any possible helpful information. A box with a contains warnings.

An example of these types of boxes are shown in the sidebar.

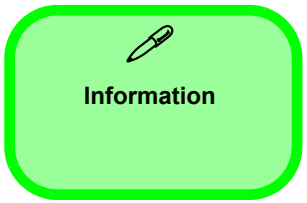

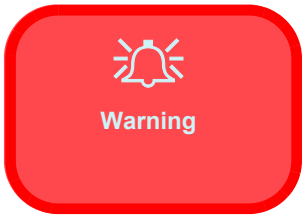

NOTE: All disassembly procedures assume that the system is turned **OFF**, and disconnected from any power supply (the battery is removed too).

Maintenance Tools

The following tools are recommended when working on the notebook PC:

- M3 Philips-head screwdriver
- M2.5 Philips-head screwdriver (magnetized)
- M2 Philips-head screwdriver
- Small flat-head screwdriver
- Pair of needle-nose pliers
- Anti-static wrist-strap

Connections

Connections within the computer are one of four types:

Locking collar sockets for ribbon connectors	To release these connectors, use a small flat-head screwdriver to gently pry the locking collar away from its base. When replacing the connection, make sure the connector is oriented in the same way. The pin1 side is usually not indicated.
Pressure sockets for multi-wire connectors	To release this connector type, grasp it at its head and gently rock it from side to side as you pull it out. Do not pull on the wires themselves. When replacing the connection, do not try to force it. The socket only fits one way.
Pressure sockets for ribbon connectors	To release these connectors, use a small pair of needle-nose pliers to gently lift the connector away from its socket. When replacing the connection, make sure the connector is oriented in the same way. The pin1 side is usually not indicated.
Board-to-board or multi-pin sockets	To separate the boards, gently rock them from side to side as you pull them apart. If the connection is very tight, use a small flat-head screwdriver - use just enough force to start.

Maintenance Precautions

The following precautions are a reminder. To avoid personal injury or damage to the computer while performing a removal and/or replacement job, take the following precautions:

1. **Don't drop it**. Perform your repairs and/or upgrades on a stable surface. If the computer falls, the case and other components could be damaged.
2. **Don't overheat it**. Note the proximity of any heating elements. Keep the computer out of direct sunlight.
3. **Avoid interference**. Note the proximity of any high capacity transformers, electric motors, and other strong magnetic fields. These can hinder proper performance and damage components and/or data. You should also monitor the position of magnetized tools (i.e. screwdrivers).
4. **Keep it dry**. This is an electrical appliance. If water or any other liquid gets into it, the computer could be badly damaged.
5. **Be careful with power**. Avoid accidental shocks, discharges or explosions.
   - Before removing or servicing any part from the computer, turn the computer off and detach any power supplies.
   - When you want to unplug the power cord or any cable/wire, be sure to disconnect it by the plug head. Do not pull on the wire.
6. **Peripherals** – Turn off and detach any peripherals.
7. **Beware of static discharge**. ICs, such as the CPU and main support chips, are vulnerable to static electricity. Before handling any part in the computer, discharge any static electricity inside the computer. When handling a printed circuit board, do not use gloves or other materials which allow static electricity buildup. We suggest that you use an anti-static wrist strap instead.
8. **Beware of corrosion**. As you perform your job, avoid touching any connector leads. Even the cleanest hands produce oils which can attract corrosive elements.
9. **Keep your work environment clean**. Tobacco smoke, dust or other air-born particulate matter is often attracted to charged surfaces, reducing performance.
10. **Keep track of the components**. When removing or replacing any part, be careful not to leave small parts, such as screws, loose inside the computer.

Power Safety Warning

Before you undertake any upgrade procedures, make sure that you have turned off the power, and disconnected all peripherals and cables (including telephone lines). It is advisable to also remove your battery in order to prevent accidentally turning the machine on.

Cleaning

Do not apply cleaner directly to the computer, use a soft clean cloth.
Do not use volatile (petroleum distillates) or abrasive cleaners on any part of the computer.

Disassembly Steps

The following table lists the disassembly steps, and on which page to find the related information. **PLEASE PERFORM THE DISASSEMBLY STEPS IN THE ORDER INDICATED.**

To remove the Battery:

1. Remove the battery *page 2 - 5*

To remove the Optical Device:

1. Remove the battery *page 2 - 5*
2. Remove the Optical device *page 2 - 6*

To remove the HDD:

1. Remove the battery *page 2 - 5*
2. Remove the HDD *page 2 - 7*

To remove the System Memory:

1. Remove the battery *page 2 - 5*
2. Remove the System Memory *page 2 - 9*

To remove the Processor:

1. Remove the battery *page 2 - 5*
2. Remove the Processor *page 2 - 11*

To remove the VGA card:

1. Remove the battery *page 2 - 5*
2. Remove the VGA card *page 2 - 12*

To remove the Keyboard:

1. Remove the battery *page 2 - 5*
2. Remove the Keyboard *page 2 - 15*
3.

To remove the Wireless LAN Module:

1. Remove the battery *page 2 - 5*
2. Remove the Keyboard *page 2 - 15*
3. Remove the Wireless LAN *page 2 - 16*

To remove the Bluetooth Module:

1. Remove the battery *page 2 - 5*
2. Remove the Keyboard *page 2 - 15*
3. Remove the Bluetooth *page 2 - 17*

To remove the Modem:

1. Remove the battery *page 2 - 5*
2. Remove the Keyboard *page 2 - 15*
3. Remove the Modem *page 2 - 18*

To remove the TV Tuner Card:

1. Remove the battery *page 2 - 5*
2. Remove the Keyboard *page 2 - 15*
3. Remove the TV tuner card *page 2 - 19*

Removing the Battery

1. Turn the computer off, and turn it over.
2. Loosen screws 1 - 3.
3. Release the battery.
4. Lift the battery 4 (*Figure b*) out of the bay as indicated.

Figure 1
Battery Removal

a. Loosen screws.
b. Release the battery.
c. Lift the battery out of the bay as indicated.

a.

b.

c.

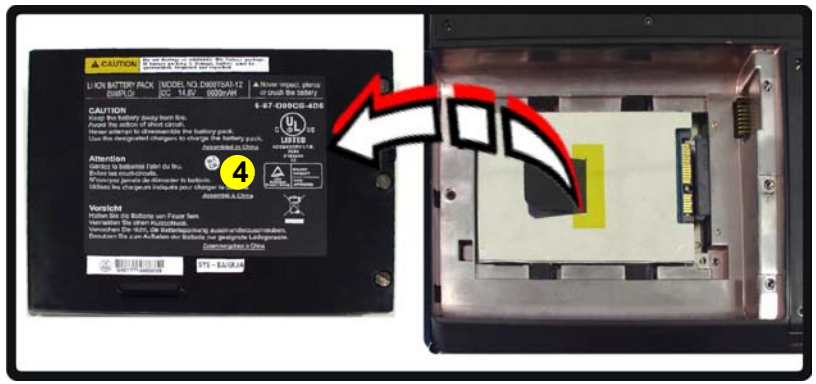

4. Battery

- 3 Screws

Figure 2
Optical Device Removal

a. Remove the screws.
b. Remove the cover.
c. Remove the screw and push the optical device out of the computer at point 8.

Removing the Optical (CD/DVD) Device

1. Turn off the computer, and turn it over and remove the battery (*page 2 - 5*).
2. Locate the hard disk bay cover and remove screws 1 - 4, and remove the bay cover 5.
3. Remove screw 6.
4. Use the screwdriver to push the optical device 7 out of the computer at point 8.
5. Reverse the process to install the new device.

a.

b.

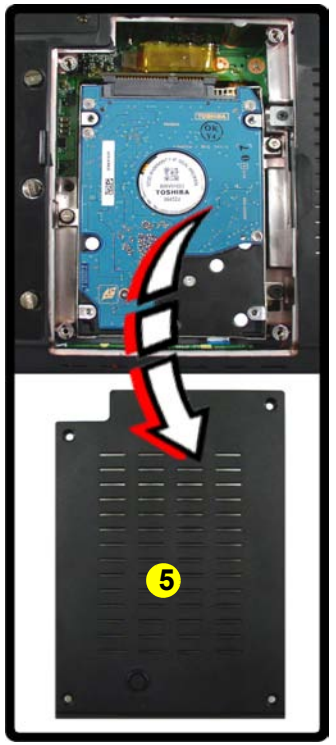

c.

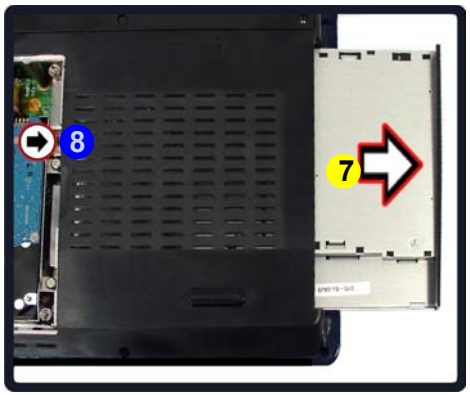

5. Hard Disk Bay Cover
7. Optical Device

- 5 Screws

Removing the Hard Disk Drive

The hard disk drive is mounted in a removable case and can be taken out to accommodate other 2.5" SATA hard disk drives with a height of 9.5mm (h). Follow your operating system's installation instructions, and install all necessary drivers and utilities (as outlined in **Chapter 4 of the User's Manual**) when setting up a new hard disk.

Hard Disk Upgrade Process

1. Turn off the computer, and turn it over and remove the battery (*page 2 - 5*).
2. Locate the hard disk bay cover and remove screws 1 - 4.
3. Remove the bay cover 5.
4. Remove screws 6 - 8 release the cable 9 and lift the hard disk assembly 10 out of the computer.
5. Remove screws 11 - 18.
6. Separate the hard disk(s) 21 from the bracket 19 and connector cable 20.
7. Reverse the process to install a new hard disk(s).

Figure 3
HDD Assembly Removal

a. Remove the screws.
b. Remove the cover
c. Release the cable and lift the hard disk assembly up out off the computer.
d. Remove the screws and separate the HDD(s) from the bracket and connector.

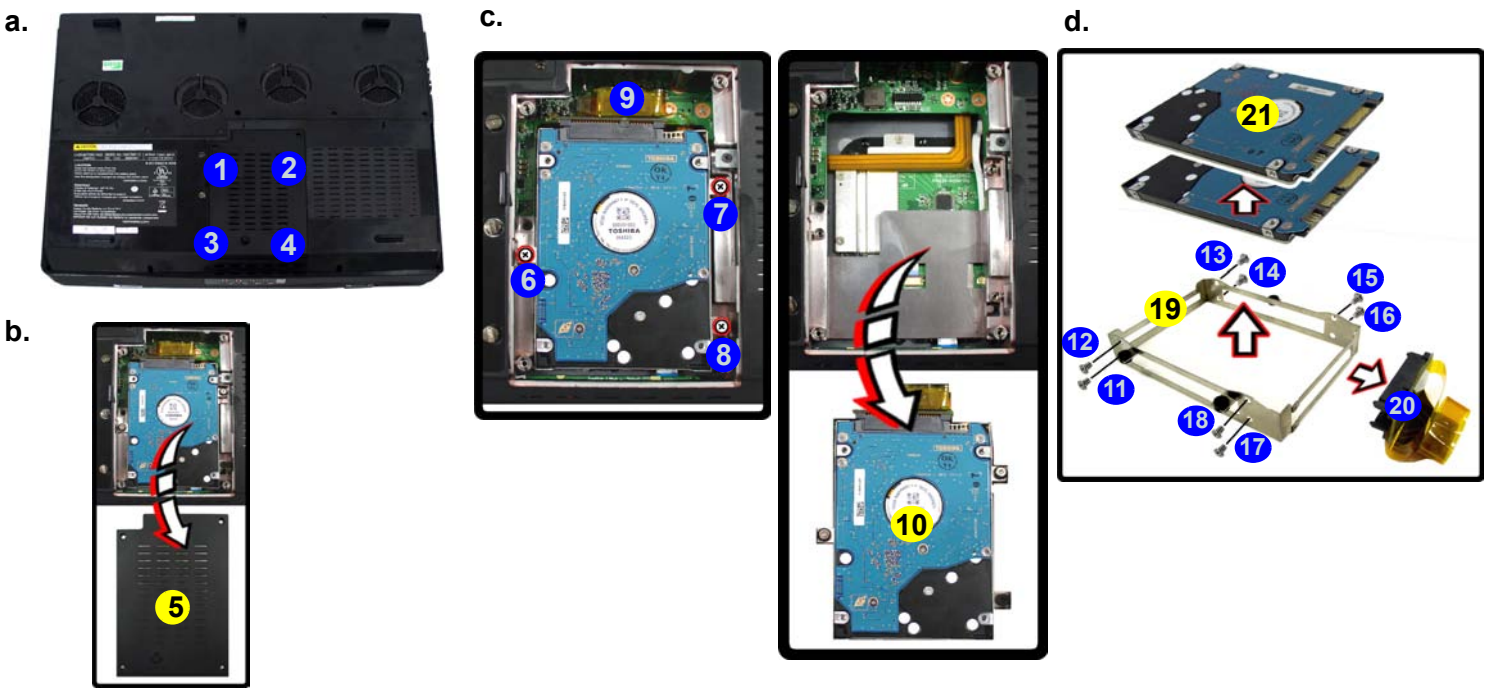

5. Hard Disk Bay Cover
10. Hard Disk Assembly
19. HDD Braket
21. HDD

- 15 Screws

Removing the Hard Disk(s) in the Secondary HDD Bay

1. Turn **off** the computer, and turn it over and remove the battery.
2. The secondary hard disk bay is located under the battery compartment.
3. Remove screw 1.
4. Slide the hard disk assembly in the direction of the arrow 2.
5. Lift the hard disk assembly 3 out of the compartment.
6. Remove the screws to release the hard disk from the case.

Figure 4
Secondary HDD Assembly Removal

a. Remove the screws and slide the hard disk assembly in the direction fo the arrow.
b. Lift the hard disk assembly out off the computer.

a.

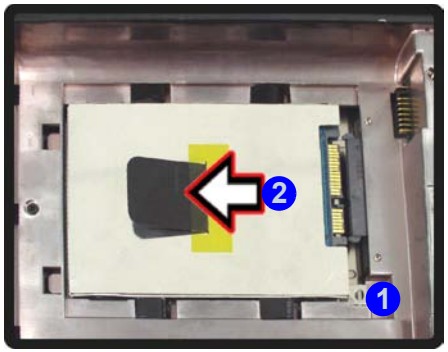

b.

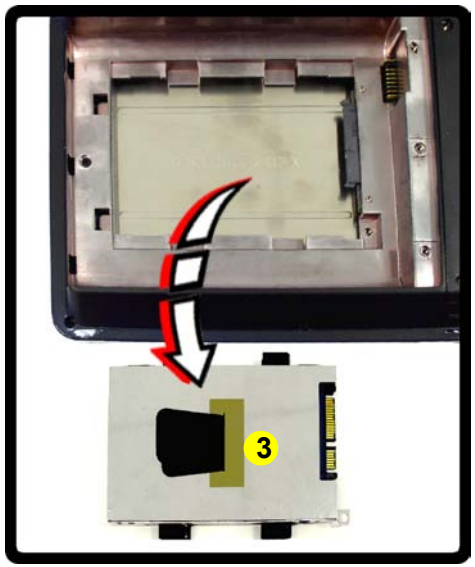

3. Hard Disk Assembly

- 1 Screw

Removing the System Memory (RAM)

The computer has two memory sockets for 200 pin Small Outline Dual In-line Memory Modules (SO-DIMM) DDR II (DDR2) supporting 533/667/800 MHz. The main memory can be expanded up to 4GB. The SO-DIMM modules supported are 512MB, 1024MB and 2048MB **DDR** Modules. The total memory size is automatically detected by the POST routine once you turn on your computer.

Memory Upgrade Process

1. Turn off the computer, and turn it over and remove the battery (*page 2 - 5*).
2. Locate the memory (RAM) bay cover and remove screws 1 - 10.
3. Lift off the bay cover 11 .
4. Remove screws 12 - 14 from the RAM fan.
5. Disconnect the fan cable and remove the RAM fan 15 .

Figure 5
RAM Module Removal

a. Remove the screws.
b. Lift off the bay cover.
c. Remove the screws.
d. Disconnect the fan cable and remove the RAM fan.

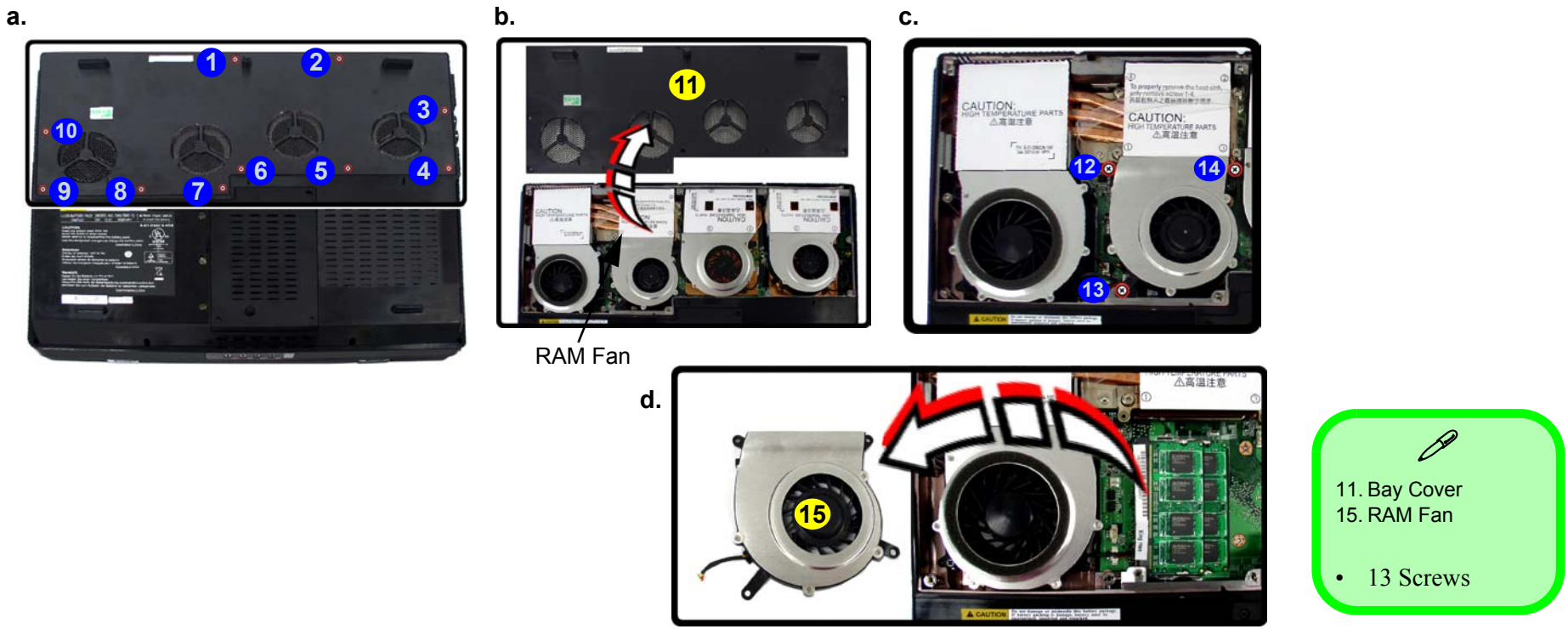

11. Bay Cover
15. RAM Fan

- 13 Screws

Figure 6
RAM Module Removal (cont'd.)

e. Pull the release latch(es).
d. Remove the module(s).

6. Gently pull the two release latches 16 & 17 on the sides of the memory socket in the direction indicated by the arrows (***Figure e***).
7. The RAM module 18 will pop-up (***Figure f***), and you can then remove it.

e.

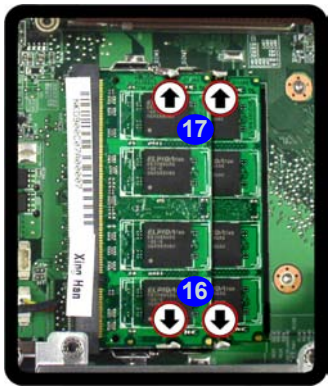

f.

8. Pull the latches to release the second module if necessary.
9. Insert a new module holding it at about a 30° angle and fit the connectors firmly into the memory slot.
10. The module will only fit one way as defined by its pin alignment. Make sure the module is seated as far into the slot as it will go. DO NOT FORCE IT; it should fit without much pressure.
11. Press the module in and down towards the mainboard until the slot levers click into place to secure the module.
12. Replace the RAM fan, cover and screws.
13. Restart the computer to allow the BIOS to register the new memory configuration as it starts up.

Contact Warning

Be careful not to touch the metal pins on the module's connecting edge. Even the cleanest hands have oils which can attract particles, and degrade the module's performance.

18. RAM Module(s)

Removing the Processor

1. Turn off the computer, and turn it over, remove the battery (*page 2 - 5*) and RAM fan (*page 2 - 9*).
2. Locate the CPU heatsink and remove screws 1 - 4 from the heat sink in the order indicated on the label.
3. Disconnect the connector 5 from the mainboard and lift the heat sink 6 (*Figure b*) up off the computer.
4. Press down and hold the latch 7 (with the latch held down you will be able to release it).
5. Move the latch 8 and bracket 9 fully in the direction indicated to unlock the CPU.
6. Carefully (it may be hot) lift the CPU 10 up out of the socket (*Figure b*).
7. Reverse the process to install a new CPU.
8. When re-inserting the CPU, pay careful attention to the pin alignment, it will fit only one way (DO NOT FORCE IT!).

a.

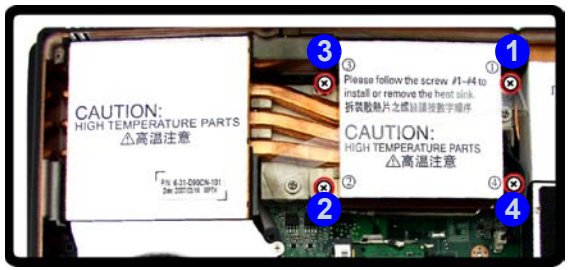

b.

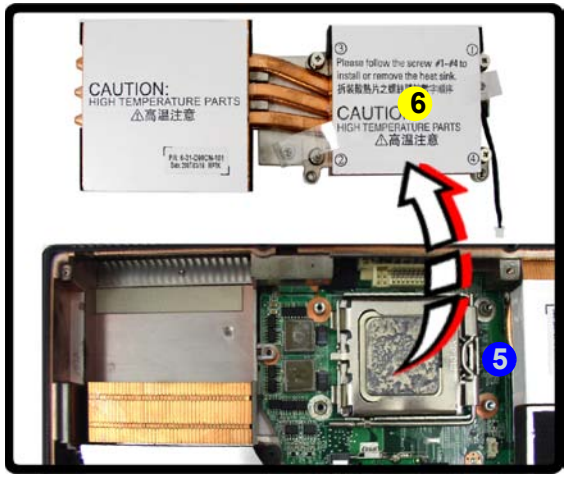

c.

d.

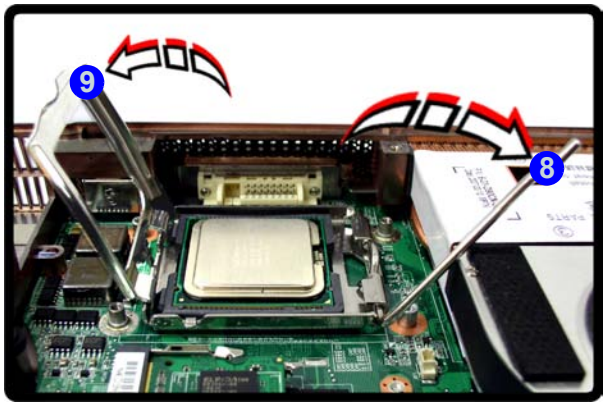

e.

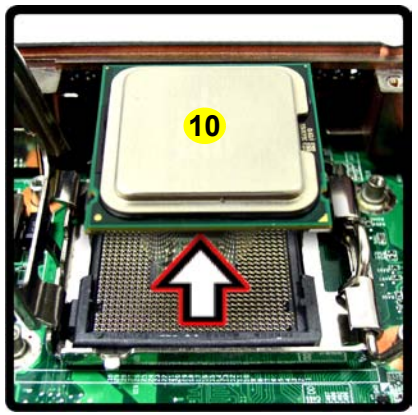

Figure 7
Processor Removal

a. Remove the screws in the order indicated and
b. Disconnect the connector and remove the heat sink.
c. Press and hold the latch.
d. Move the latch and bracket fully in the direction to unlock the CPU.
e. Lift the CPU out of the socket.

Caution

The heat sink, and CPU area in general, contains parts which are subject to high temperatures. Allow the area time to cool before removing these parts.

6. Heat Sink
10. CPU

- 4 Screws

Figure 8
VGA Card Removal

a. Remove the screws.
b. Remove the cover.
c. Remove the screws and disconnect the cable(s).
d. Release the VGA card fans.
e. Remove the screws.

Removing the VGA Card

1. Turn off the computer, and turn it over and remove the battery (*page 2 - 5*).
2. Locate the VGA bay cover and remove screws 1 - 10.
3. Lift off the bay cover 11 .
4. Remove screws 12 - 17 from the VGA card fans.
5. Disconnect the fan cable(s) 18 & 19.
6. Remove the VGA card fan 20 .
7. Remove screws 21 - 24 from the VGA card module(s).

a.

c. Slot B Slot A

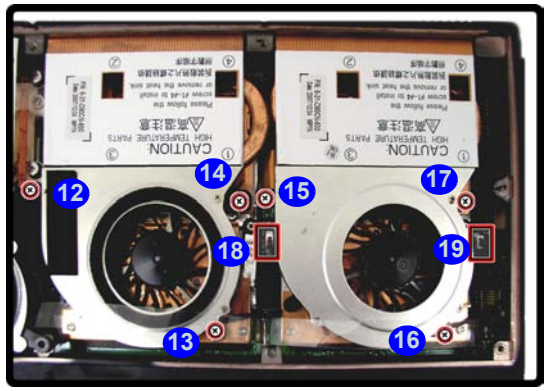

Notes

Two VGA cards are pictured. If you are installing a single VGA card, it should be installed in Slot A.

b.

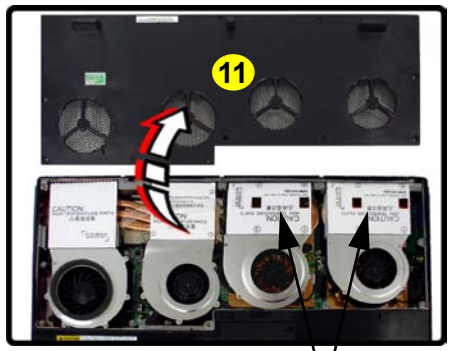

VGA Card Fans

d.

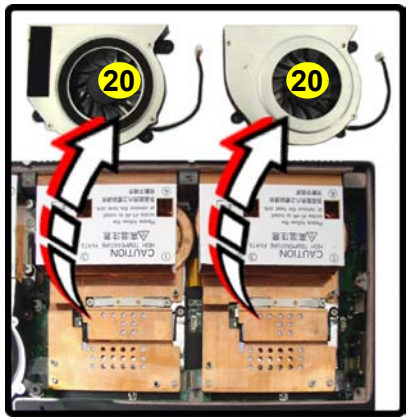

e.

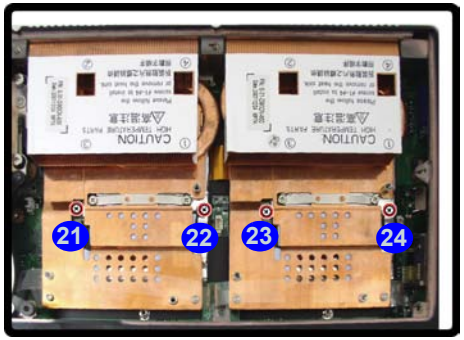

11. Bay Cover
20. VGA card fans

- 20 Screws

8. Grip the handle and carefully lift the VGA card module 25 in slot A.
9. If two VGA cards are installed, disconnect the SLI cable 26 from the VGA card modules.
10. Carefully remove the VGA card module 27 in slot B from the mainboard.

f.

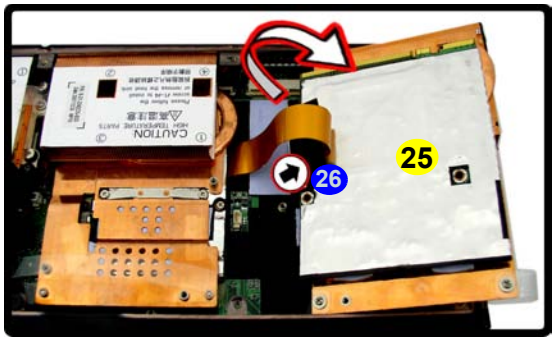

g.

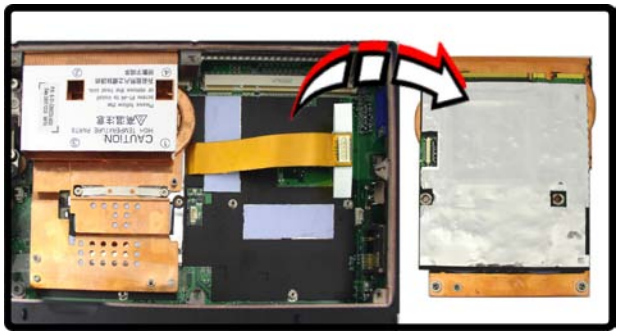

h.

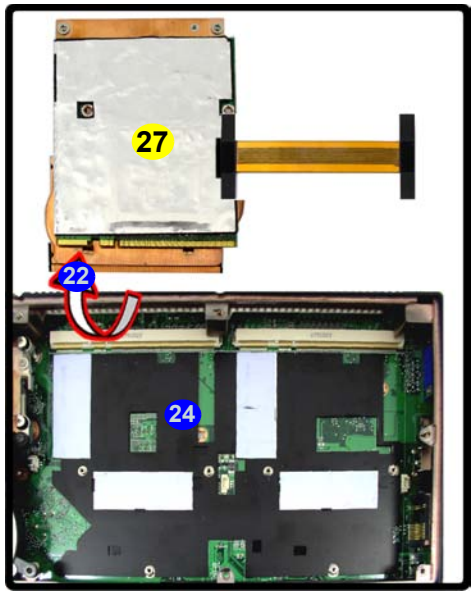

Re-Installing Two VGA Cards

Make sure you connect the SLI cable to both VGA cards when re-installing two VGA cards.

Figure 9
VGA Card Removal (cont'd.)

f. Remove the VGA module from slot A.
g. Disconnect the cable.
h. Remove the VGA modulefrom slot B.

25. VGA Card Module
26. SLI Cable
27. VGA Card Module

Installing the VGA Card

1. Prepare to fit the VGA card 25 into the slot by holding it at about a 30° angle.
2. The card needs to be fully into the slot, and the VGA card and socket have a guide-key and pin which align to allow the card to fit securely.
3. Fit the connectors firmly into the socket, straight and evenly.
4. DO NOT attempt to push one end of the card in ahead of the other.
5. The card's pin alignment will allow it to only fit one way. **Make sure the module is seated as far into the socket as it will go** (none of the gold colored contact should be showing). DO NOT FORCE the card; it should fit without much pressure.
6. Secure the card with screw 24 (***Figure 9g on page 2 - 13***).
7. Place the heatsink 23 back on the card, and secure the screws in the order indicated in ***Figure 8 on page 2 - 12***.
8. Attach the VGA card fan and secure with the screws as indicated in ***Figure 8 on page 2 - 12***.
9. Reinsert the component bay cover, and secure with the screws as indicated in ***Figure 8 on page 2 - 12***.

Figure 10
VGA Card Installation

a. Carefully Insert the VGA Card.

a.

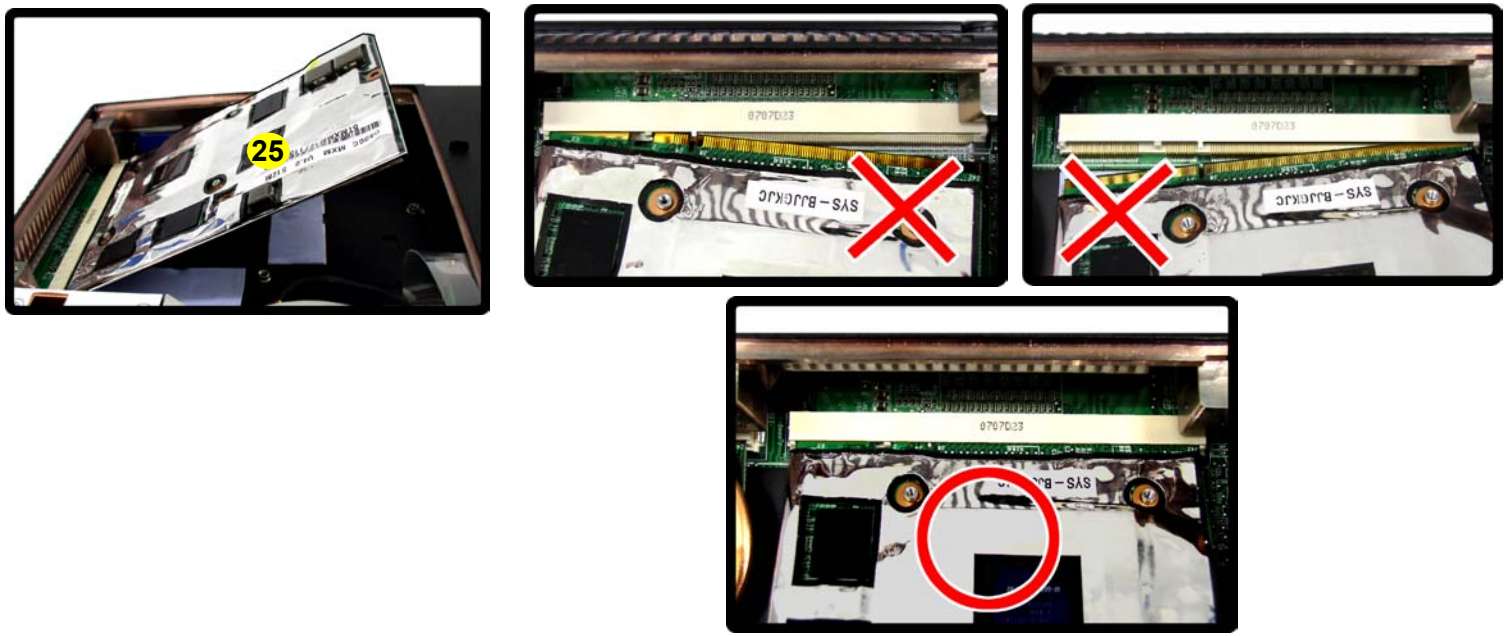

25. VGA card

Removing the Keyboard

1. Turn off the computer, and turn it over and remove the battery (*page 2 - 5*).
2. Press the **four** keyboard latches at the top of the keyboard to elevate the keyboard from its normal position (you may need to use a small screwdriver to do this).
3. Carefully lift the keyboard 5 up, being careful not to bend the keyboard ribbon cable 6 (*Figure c*).
4. Disconnect the keyboard ribbon cable 6 from the locking collar socket 7.
5. Carefully lift up the keyboard 5 (*Figure d*) off the computer.

Figure 11
Keyboard Removal

a. Press the four latches to release the keyboard.
b. Lift the keyboard up.
c. Disconnect the cable from the locking collar.
d. Remove the keyboard.

a.

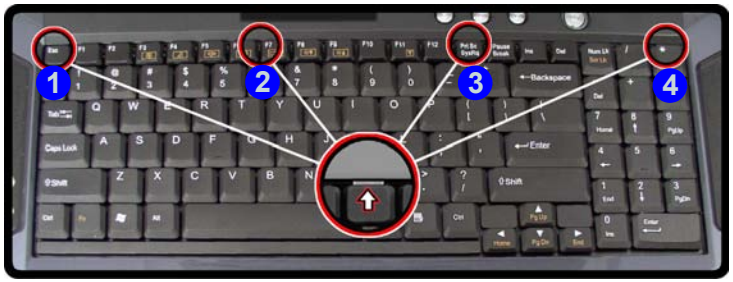

c.

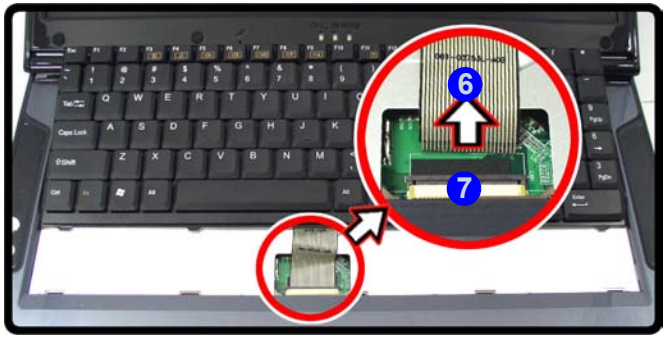

b.

d.

Re-Inserting the Keyboard

When re-inserting the keyboard firstly align the **five** keyboard tabs at the bottom (*Figure b*) at the bottom of the keyboard with the slots in the case.

5. Keyboard

Removing the Wireless LAN Module

1. Turn off the computer, and turn it over, remove the battery (*page 2 - 5*) and keyboard (*page 2 - 15*).
2. Remove screws 1 - 2 from the keyboard shielding.
3. Remove the keyboard shielding 3, the Wireless LAN Module will be visible at point 4.
4. Carefully disconnect cables 5 & 6 and remove screws 7 - 8.
5. The Wireless LAN Module 9 (*Figure c*) will pop-up, and you can remove it.

Figure 12
Wireless LAN Module Removal

a. Remove the screws.
b. Remove the keyboard shielding.
c. Disconnect the cables and remove the screws.
d. Remove the WLAN module.

Note: Make sure you reconnect the antenna cables to the "Main" and "BT" socket (*Figure c*).

a.

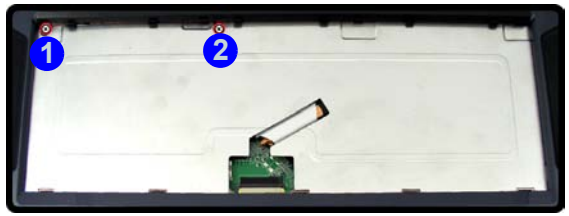

b.

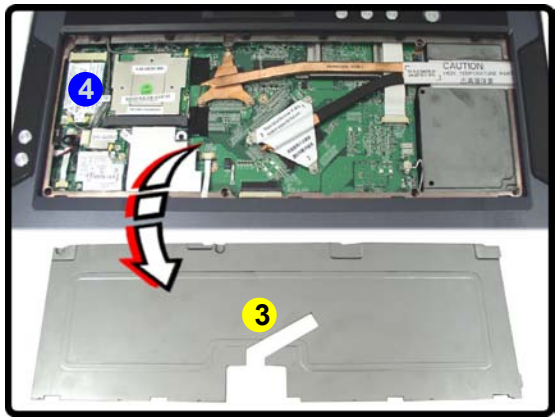

c.

d.

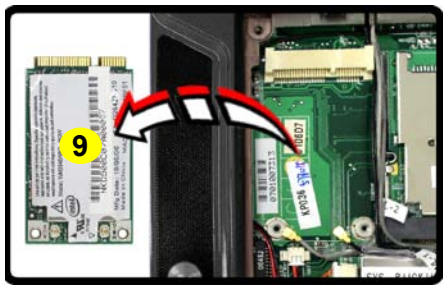

3. Keyboard Shielding
9. Wireless LAN Module

- 4 Screws

Removing the Bluetooth Module

1. Turn off the computer, and turn it over, remove the battery (*page 2 - 5*), keyboard (*page 2 - 15*) and keyboard shielding (*page 2 - 16*).
2. The Bluetooth module is visible at point 1.
3. Carefully disconnect cables 2 & 3 and remove the screw 4.
4. Lift the Bluetooth module 5 off the computer.

Figure 13
Bluetooth Module Removal

a. Disconnect the cables and remove the screw.
b. Remove the Bluetooth module.

a.

b.

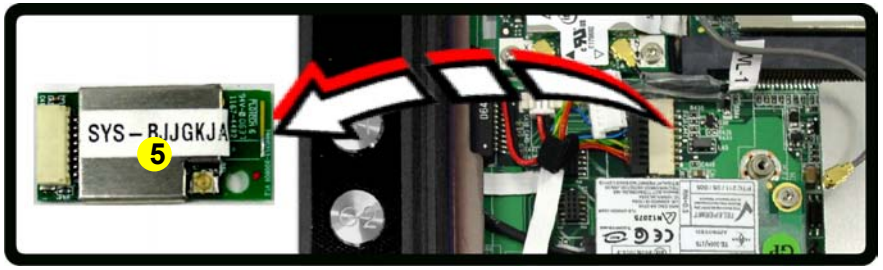

Note: Make sure you reconnect the antenna cables to the socket (*Figure a*).

5. Bluetooth Module

- 1 Screw

Figure 14
Modem Removal

a. Remove the screws and disconnect the cable.
b. Lift the modem up off the socket.

Removing the Modem

1. Turn off the computer, and turn it over, remove the battery (***page 2 - 5***), keyboard (***page 2 - 15***) and keyboard shielding (***page 2 - 16***).
2. The modem is visible at point 1.
3. Remove the screws 2 - 3 from the modem module and disconnect cable 4.
4. Lift the modem up off the socket 5.
5. Lift the modem 6 up and off the computer.

a.

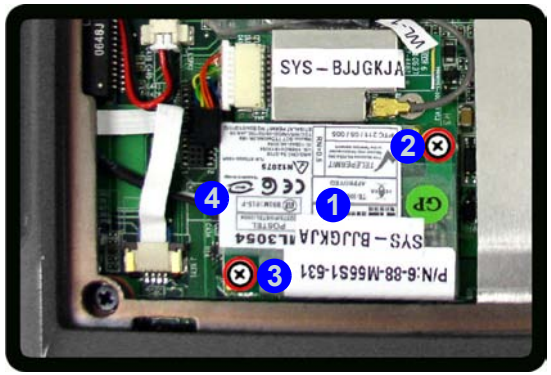

b.

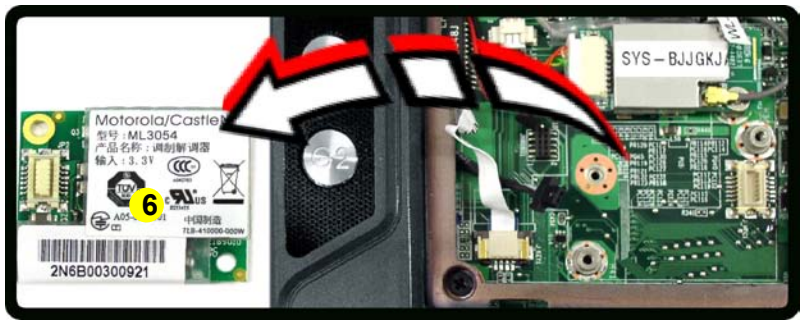

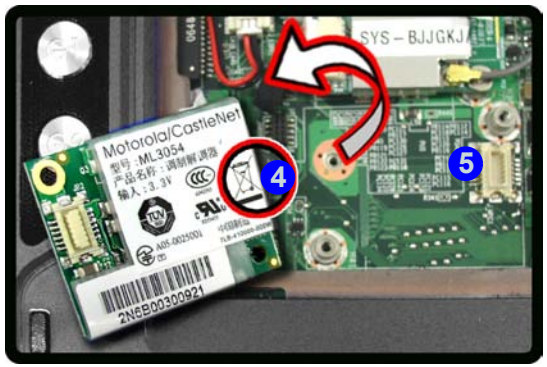

6. Modem

- 2 Screws

Removing the TV Tuner Card

1. Turn off the computer, and turn it over, remove the battery (*page 2 - 5*), keyboard (*page 2 - 15*) and keyboard shielding (*page 2 - 16*).
2. The TV tuner card is visible at point 1.
3. Carefully disconnect the cable 2 and then gently pull the two release latches 3 - 4 on the sides of the module socket.
4. The TV tuner card 5 will pop-up and and you can remove it.

.

Figure 15
TV Tuner Card Removal

a. Disconnect the cable and pull the release latches.
b. The TV tuner card will pop up and remove it.

a.

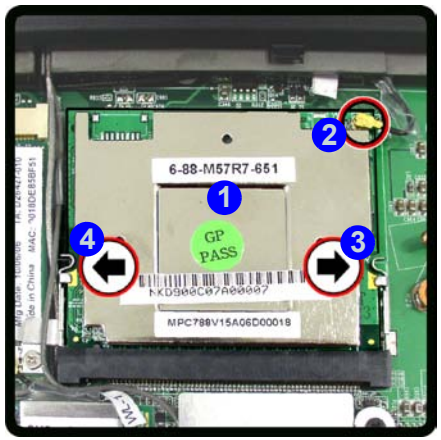

b.

b.

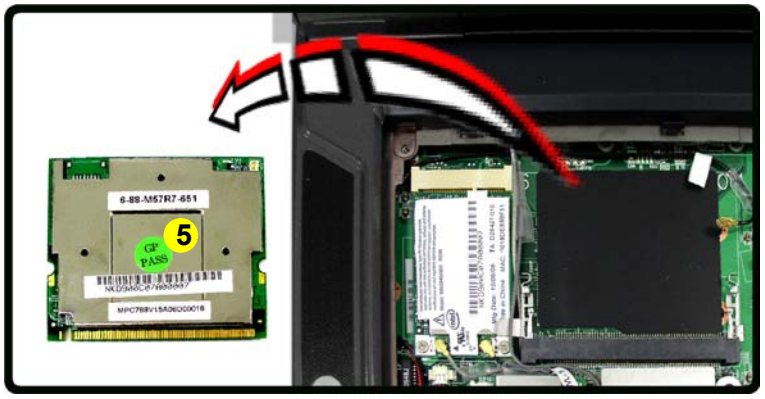

5. TV tuner card

Appendix A:Part Lists

This appendix breaks down the ***D900C/D901C*** series notebook's construction into a series of illustrations. The component part numbers are indicated in the tables opposite the drawings.

Note: This section indicates the *manufacturer's* part numbers. Your organization may use a different system, so be sure to cross-check any relevant documentation.

Note: Some assemblies may have parts in common (especially screws). However, the part lists DO NOT indicate the total number of duplicated parts used.

Note: Be sure to check any update notices. The parts shown in these illustrations are appropriate for the system at the time of publication. Over the product life, some parts may be improved or re-configured, resulting in *new* part numbers.

Part List Illustration Location

The following table indicates where to find the appropriate part list illustration.

Table A - 1
Part List Illustration Location

Part	D900C/D901C
TOP (D900C/D901C)	*page A - 3*
BOTTOM (D900C/D901C)	*page A - 4*
LCD (D900C/D901C)	*page A - 5*
MB - one VGA only (D900C/D901C)	*page A - 6*
MB (D900C/D901C)	*page A - 7*
HDD (D900C/D901C)	*page A - 8*
2nd HDD (D900C/D901C)	*page A - 9*
COMBO (D900C/D901C)	*page A - 10*
DVD-DUAL RW (D900C/D901C)	*page A - 11*

TOP (D900C/D901C)

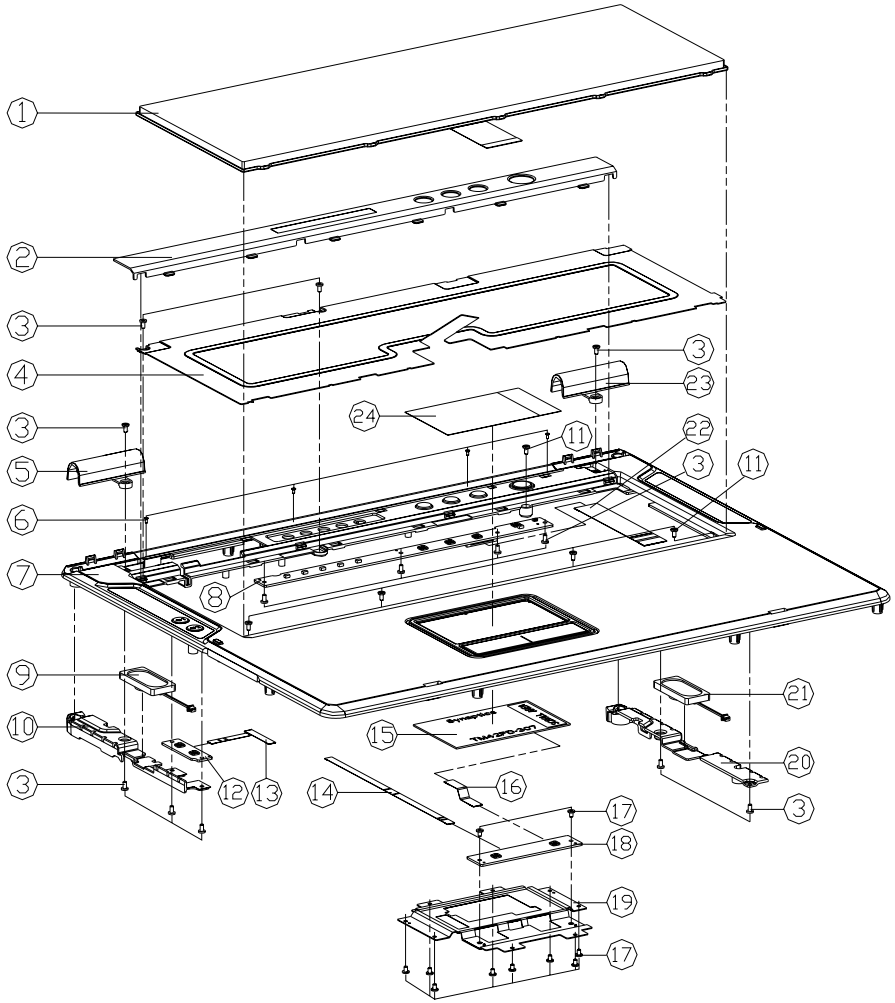

ITEM	PART NAME	PART NO	REMARK
1	KEYBOARD 無鉛	6-80-D90T0-011-1	
2	CENTER COVER MODULE D900C 無鉛	6-33-D90C2-101	
3	SCREW M2*4L I BZ ICT GTY-PATCH 無鉛	6-35-C6120-4RB	
4	KB SHIELDING AL D900C 無鉛	6-33-D90C2-081	
5	HINGE COVER + GASKET MODULE (L) 寶石藍 無鉛	6-42-D9TAY-501	
5	HINGE COVER+GASKET MODULE (L) D901C 無鉛	6-42-D91CY-200	
6	SCREW M2*4L F NI ICT NY 無鉛	6-35-21120-4RA	
7	TOP CASE MODULE D900C 無鉛	6-39-D90C2-012	
7	TOP CASE MODULE D901C 無鉛	6-39-D91C2-011	
8	SWITCH BOARD V5.0A FOR D900C 無鉛	6-77-D90CS-D05A	
9	SPK. WITH CABLE 52MM 1W 8? L-SIDE 無鉛	6-23-5D90C-030	
10	TOP FRAME L AZ91D D900C 無鉛	6-33-D90C2-031	
11	SCREW M2.5*6L K BZ ICT NY 無鉛	6-35-82125-6RA	
12	FUNCTION BOARD V5.0A FOR D900C 無鉛	6-77-D90C7-D05A	
13	FFC CABLE 4PIN M/B TO FUNCTION BOARD FOR D900C 無鉛	6-43-D90C0-020	
14	FFC CABLE 4PIN M/B TO CLICK BOARD FOR D900C 無鉛	6-43-D90C0-010	
15	TOUCHPAD SYNAPTICS TM61PDZG307 D900T 無鉛	6-49-D90T2-011	
16	FFC CABLE FOR CLICK BOARD TO TOUCH PAD 35.8MM 12PIN 無鉛	6-43-D90T0-080	
17	SCREW M2*3L KI NI ICT GTY-PATCH 無鉛	6-35-B1120-3RE	
18	CLICK BOARD V5.0A FOR D900C 無鉛	6-77-D90C2-D05A	
19	GP HOLDER BKT SUS301 D900C 無鉛	6-33-D90C2-052	
20	TOP FRAME R AZ91D D900C 無鉛	6-33-D90C2-041	
21	SPK. WITH CABLE 180MM 1W 8? R-SIDE 無鉛	6-23-5D90C-020	
22	FFC CABLE FOR MPB TO SWITCH BOARD 16 PIPER 7PIN 7PIN 耐熱 D5 FOR D900C 無鉛	6-43-D90C0-060	
23	HINGE COVER (R) 寶石藍 無鉛	6-42-D9TAY-052	
23	HINGE COVER (R) PC+ABS D901C 無鉛	6-42-D91CY-010	
24	T/P MYLAR D900C 無鉛	6-40-D90C2-031	

Figure A - 1
TOP (D900C/ D901C)

BOTTOM (D900C/D901C)

Figure A - 2
BOTTOM (D900C/ D901C)

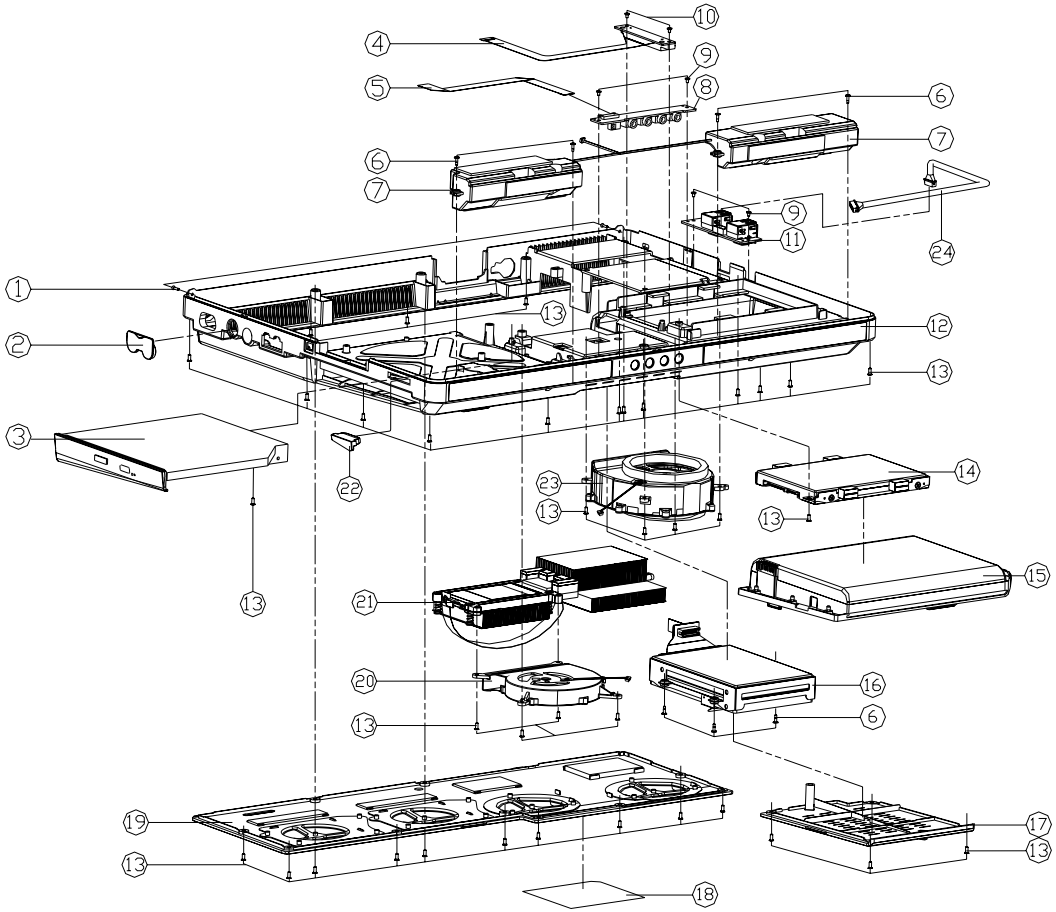

ITEM	PART NAME	PART NO	REMARK
1	SCREW M2*8L F NI ICT NY 無鉛	6-35-21120-8RA	
2	TV TUNER RUBBER SILICON D900C 無鉛	6-47-D90CT-010	
3	COMBO ASS'Y D900C 無鉛	6-79-D90CX-000	
3	DVD/DUAL RW ASS'Y D900C 無鉛	6-79-D90CQ-000	
4	FPC CABLE M/B TO 3RD SATA HDD FOR D900C 無鉛	6-43-D90CJ-011	
5	FFC CABLE 18PIN M/B TO AUDIO BOARD FOR D900C 無鉛	6-43-D90C0-040	
6	SCREW M2*7.5L D1=2.1 L=4.5 S=2.5 K NI ICT 無鉛	6-35-81120-750	
7	SPK. WITH CABLE 2W 4"KFG-20SC04) D900C 無鉛	6-23-5D90C-010	
8	AUDIO BOARD V5.0A FOR D900C 無鉛	6-77-D90C8-D05A	
9	SCREW M2*4L I BZ ICT GTY-PATCH 無鉛	6-35-C6120-4RB	
10	SCREW M2*7.0L K1 NI ICT NY 無鉛	6-35-B1120-7RA	
11	USB BOARD V5.0A FOR D900C 無鉛	6-77-D90C3-D05A	
12	BOTTOM CASE MODULE D900C 無鉛	6-39-D90C3-012	
12	BOTTOM CASE MODULE D901C 無鉛	6-39-D91C3-011	
13	SCREW M2.5*6L K BZ ICT NY 無鉛	6-35-82125-6RA	
14	W/O 2ND HDD ASS'Y 無鉛	6-79-D90CJ-020	
15	BAT(外),5,1,1, 14.8V, 6.6AH 12C 4S3PK SAMSUNG) SMP 無鉛	6-87-D90CS-4D6	
16	W/O HDD ASS'Y D900C 無鉛	6-79-D90CJ-010	
17	HDD COVER MODULE D900C 無鉛	6-42-D90CJ-101	
18	PRODUCT LABEL FOR D900C 無鉛	6-45-D90C3-010	
18	PRODUCT LABEL FOR D901C 無鉛	6-45-D91C3-010	
19	CPU COVER MODULE D900C 無鉛	6-42-D90CS-102	
20	FAN 50*9.5MM 5V 0.35A DS6005M28 4600RPM APOWER D900C 無鉛	6-23-AD90C-021	
21	CPU HEATSINK MODULE D900C 無鉛	6-31-D90CN-101	
22	CARD READER RUBBER COVER 無鉛	6-47-M66NE-010	
23	FAN 60*20.5MM 5V 0.25A DS6005M28 3000RPM APOWER D900C 無鉛	6-23-AD90C-011	
24	WIRE CABLE 20PIN M/B TO USB BOARD FOR D900C 無鉛	6-43-D90C0-050	

LCD (D900C/D901C)

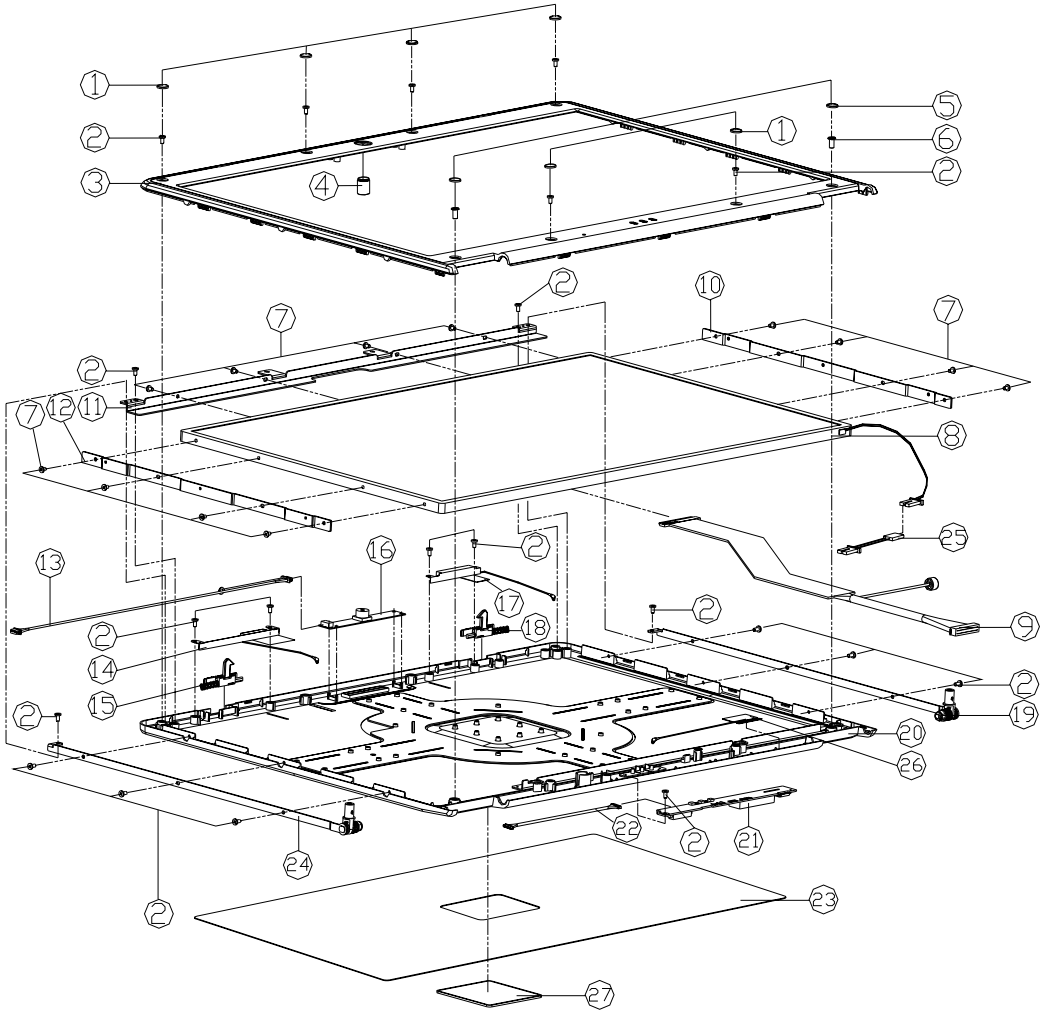

ITEM	PART NAME	PART NO	REMARK
1	LCD RUBBER (UP) T=1.9MM 無鉛	6-47-D90T1-012	
2	SCREW M2*4L 1 BZ ICT GTY-PATCH (T=0.8 D=4) 無鉛	6-35-C6120-4RB	
3	DISPLAY FRONT COVER MODULE D900C 無鉛	6-39-D90C1-011	
3	DISPLAY FRONT COVER MODULE D901C 無鉛	6-39-D91C1-010	
4	VIDEO CAMERA RUBBER 無鉛	6-47-D90T1-030	FOR W/CCD
5	LCD RUBBER (DOWN) 無鉛	6-47-D90T1-020	
6	SCREW M3*6L KI NI ICT NY 無鉛	6-35-B1130-6RA	
7	SCREW M2*3L KI NI ICT NY 無鉛	6-35-B1120-3RA	
8	LCD T LG LP171W02-A4K1(GT/IPS) 17" WSXGA+ 6.9MM 無鉛	6-50-NA269-L03	
8	LCD T LG LP171WU1-A4K4(GLARE TYPE) 17.1" WUXGA 6.9MM 無鉛	6-50-NB269-L01	
8	LCD T 17" AU B170PW01 V1 (WXGA, GLARE TYPE) 1440x900 7.0MM 無鉛	6-50-N7270-G00	
8	LCD T LG LP171WE2-TL03(GLARE TYPE) 17" WSX 無鉛	6-50-NA265-L02	
9	WIRE CABLE 40PIN M/B TO LCD LG LP171W02 FOR D900C 無鉛	6-43-D90C1-020	FOR LG LP171W02
9	WIRE CABLE 40PIN M/B TO LCD LG LP171WU1 FOR D900C 無鉛	6-43-D90C1-010	FOR LG LP171WU1
9	WIRE CABLE 40PIN M/B TO LCD AU B170PW01 FOR D900C 無鉛	6-43-D90C1-030	FOR AU B170PW01
10	LG LCD17 BRACKET (R) 無鉛	6-33-D90T1-061	
11	TOP BRACKET OF LG LCD17 無鉛	6-33-D90T1-142	
12	LG LCD17 BRACKET(L) 無鉛	6-33-D90T1-071	
13	WIRE CABLE 4PIN M/B TO CCD MODULE FOR D900C 無鉛	6-43-D90CT-010	
14	ANTENNA-L WIRELESS LAN DUAL BAND PIFA L=420MM GRAY 精美 無鉛	6-23-7D90C-020	
15	HOOK KNOB(L) MODULE 無鉛(增加卡勾角度)	6-42-D90T1-804	
16	UVC CAMERA ORION FIX CMM2B2E-01P 1.3M D900C 無鉛	6-88-D90CC-680	OPTION
17	ANTENNA-R WLAN 2.4G/5G PIFA W1.5 黑色 485MM 高級 D900C 無鉛	6-23-7D90C-011	
18	HOOK KNOB(R) MODULE 無鉛(增加卡角度)	6-42-D90T1-704	
19	HINGE (R) 無鉛	6-33-D90T1-012	
20	DISPLAY BACK CASE MODULE D900C 無鉛	6-39-D90C1-021	
20	DISPLAY BACK COVER MODULE D901C 無鉛	6-39-D91C1-020	
21	INVERTER MODULE V1.0 MPT N239 D900C 無鉛	6-76-D800R-011	
22	WIRE CABLE FOR M/B TO INVERTER 220M 12 PI 無鉛	6-43-D90T0-053	
23	BACK PANEL COSMETIC PLATE AL D900C 無鉛	6-33-D90C1-011	
23	BACK PANEL COSMETIC PLATE AL D901C 無鉛	6-33-D91C1-010	
24	HINGE (L) 無鉛	6-33-D90T1-022	
25	WIRE CABLE CONVERTER25MM/CONNECTOR 縮減改變" 無鉛	6-43-D4701-031	
26	ANTENNA-BLUETOOTH 30*20 SLAB, L=400MM D900C 無鉛	6-23-7D90C-030	
27	LOGO BASE 無鉛	6-42-D90T1-030	

Figure A - 3
LCD (D900C/ D901C)

MB - One VGA only (D900C/D901C)

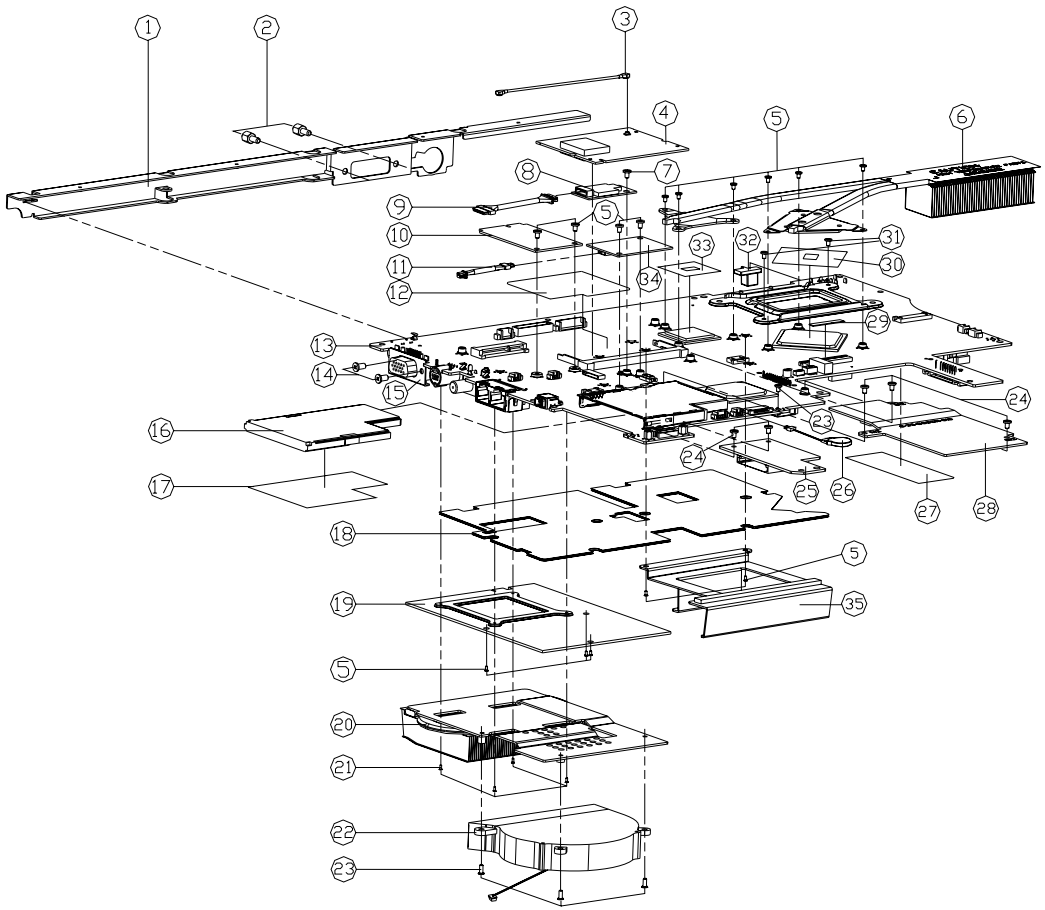

Figure A - 4
MB - One VGA only (D900C/D901C)

ITEM	PART NAME	PART NO	REMARK
1	IO BRACKET SUS D900C	6-33-D90CS-010	
2	HEX STUD (SUM22 NI-PL) 19MM GTY-PATCH	6-34-07009-012	
3	TV TUNER CABLE FOR D900C	6-43-D90CT-050	
4	MINI PCI MCE TV TUNER (MPC718) ASSY D900C	6-79-D90CT-010	FOR OPTION
4	HYBRID TV TUNER YUAN H/W MPC718 MCE MINI-P	6-88-L22C7-656	FOR OPTION
4	ANALOG TV TUNER YUAN S/W YSTMPC788GP-215	6-88-M57R7-652	FOR OPTION
4	HYBRID TV TUNER YUAN S/W YSTMPC788GP-515	6-88-M57R7-653	FOR OPTION
5	SCREW M2*3L K1 NI ICT NY	6-35-B1120-3RA	
6	SLI HEATSINK MODULE D900C	6-31-D90CN-301	
7	SCREW M2*3L K1 NI ICT GTY-PATCH	6-35-B1120-3RE	
8	[illegible]	6-88-M62E5-390	FOR OPTION
9	WIRE CABLE 8PIN W/B TO BLUETOOTH MODULE FOR D90C	6-43-D90CB-010	
10	WLAN 802.11A+BG MINI-CARD PCI-E 3945ABG INTEL HDY SKU 3	6-88-M66N2-421	FOR OPTION
10	WLAN 802.11A+BG MINI-CARD PCI-E 3945ABG INTEL HDY SKU 3	6-88-M66N2-422	FOR OPTION
10	WLAN 802.11A+BG MINI-CARD PCI-E 3945ABG INTEL HDY SKU 3	6-88-M66N2-423	FOR OPTION
10	WLAN 802.11A+BG MINI-CARD PCI-E 3945ABG INTEL HDY SKU 3	6-88-M66N2-424	FOR OPTION
10	WLAN 802.11A+BG MINI-CARD PCI-E 3945ABG INTEL HDY SKU 3	6-88-M66N2-425	FOR OPTION
11	WIRE CABLE 2PIN W/B TO MDC MODULE FOR D900C	6-43-D90CU-010	
12	M520G MYLAR FOR WLAN	6-40-M52GS-030	
13	MAIN BOARD V5.0A D900C	6-77-D90C0-D05A	
14	SCREW 4-40*5L K NI ACT NY	6-35-81304-5R0	
15	CRT BRACKET SUS D900C	6-33-D90CT-020	
16	NEW CARD DUMMY FOR M550N	6-42-M55NP-010	
17	MYLAR FOR NEWCARD FR83 D900C	6-40-D90CS-011	
18	VRAM SINK BRACKET AL1050 D900C	6-33-D90CS-031	
19	NVIDIA VGA CARD V4.0A (512M/16M*32)	6-77-D90CL-D04A	
20	VGA HEATSINK MODULE D900C	6-31-D90CN-202	
21	SCREW M1.6*3.5L KCT=0.8 D=4.5) BZ ICT NY	6-35-82116-3R5	
22	FAN 55*62MM 5V 0.32A BSA0705R2 2300RPM ARTHER D90C	6-23-AD90C-032	
23	SCREW M2.5*6L K BZ ICT NY	6-35-82125-6RA	
24	SCREW M2*4L I BZ ICT GTY-PATCH (T=0.8 D=4)	6-35-C6120-4RB	
25	CARD READER BOARD V5.0A D900C	6-77-D90CV-D05A	
26	[illegible]	6-23-22015-P2C	
27	M520G MYLAR FOR DDR	6-40-M52GS-010	
28	CHOCK HEATSINK AL1050 D900C	6-33-D90CN-010	
29	M520G K/B CONN MYLAR	6-40-M52GS-060	
30	NB CHIP MYLAR D900C	6-40-D90CS-040	
31	SCREW M2.5*4L K1 BK/O ICT NY	6-35-B4125-4RA	
32	POWER TRIGER RUBBER SILICON D900C	6-47-D90C4-010	
33	SLI CHIP MYLAR D900C	6-40-D90CS-030	
34	[illegible]	6-88-M55S1-531	
34	[illegible]	6-88-M66S1-620	
35	VGA OUTLET COVER SECC D900C	6-33-D90CS-091	

MB (D900C/D901C)

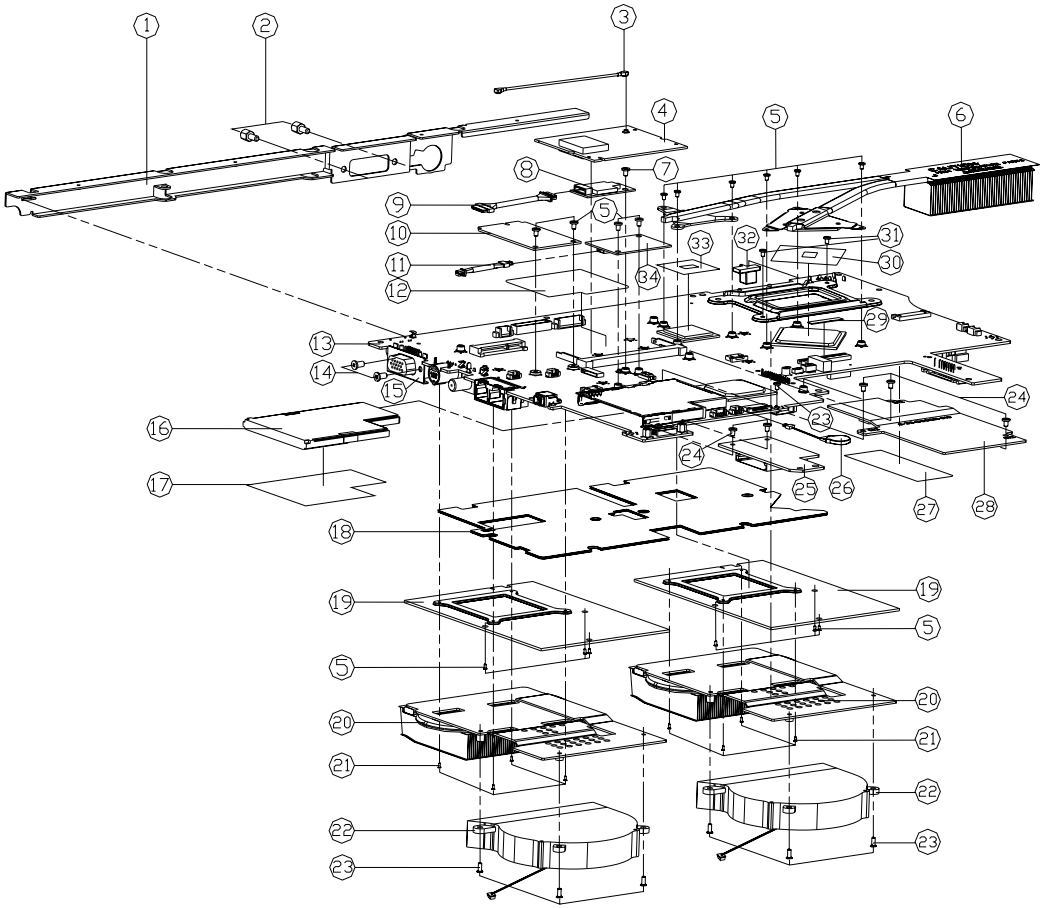

ITEM	PART NAME	PART NO	REMARK
1	IO BRACKET SUS D900C 無鉛	6-33-D90CS-010	
2	HEX STUD (SUM22 NI-PL) 11MM GTY-PATCH 無鉛	6-34-07009-012	
3	TV TUNER CABLE FOR D900C 無鉛	6-43-D90CT-050	
4	MINI PCI MCE TV TUNNER (MPC718) ASS'Y D900C 無鉛	6-79-D90CT-010	FOR OPTION
4	HYBRID TV TUNER YUAN H/W MPC718 MCE MINI-P 無鉛	6-88-L22C7-656	FOR OPTION
4	ANALOG TV TUNNER YUAN S/W YSTMPC788GP-215 無鉛	6-88-M57R7-652	FOR OPTION
4	HYBRID TV TUNNER YUAN S/W YSTMPC788GP-515 無鉛	6-88-M57R7-653	FOR OPTION
5	SCREW M2*3L K1 NI ICT NY 無鉛	6-35-B1120-3RA	
6	SLI HEATSINK MODULE D900C 無鉛	6-31-D90CN-301	
7	SCREW M2*3L K1 NI ICT GTY-PATCH 無鉛	6-35-B1120-3RE	
8	[illegible] 無鉛	6-88-M62E5-390	FOR OPTION
9	WIRE CABLE 8PIN M/B TO BLUETOOTH MODULE FOR D900C 無鉛	6-43-D90CB-010	
10	WLAN 8821AH-DG MINI-CARD PCI-E 3945ABG INTEL ROW SKU 3 無鉛	6-88-M66N2-421	FOR OPTION
10	WLAN 8821AH-DG MINI-CARD PCI-E 3945ABG INTEL ROW SKU 3 無鉛	6-88-M66N2-422	FOR OPTION
10	WLAN 8821AH-DG MINI-CARD PCI-E 3945ABG INTEL ROW SKU 3 無鉛	6-88-M66N2-423	FOR OPTION
10	WLAN 8821AH-DG MINI-CARD PCI-E 3945ABG INTEL ROW SKU 3 無鉛	6-88-M66N2-424	FOR OPTION
10	WLAN 8821AH-DG MINI-CARD PCI-E 3945ABG INTEL ROW SKU 3 無鉛	6-88-M66N2-425	FOR OPTION
11	WIRE CABLE 2PIN M/B TO MOC MODULE FOR D900C 無鉛	6-43-D90CU-010	
12	M520G MYLAR FOR WLAN 無鉛	6-40-M52GS-030	
13	MAIN BOARD V5.0A D900C 無鉛	6-77-D90C0-D05A	
14	SCREW 4-40*5L K NI ACT NY 無鉛	6-35-81304-5R0	
15	CRT BRACKET SUS D900C 無鉛	6-33-D90CT-020	
16	NEW CARD DUMMY FOR M550N 無鉛	6-42-M55NP-010	
17	MYLAR FOR NEWCARD FR83 D900C 無鉛	6-40-D90CS-011	
18	VRAM SINK BRACKET AL1050 D900C 無鉛	6-33-D90CS-031	
19	MXM VGA CARD V4.0A (512M/16M*32) 無鉛	6-77-D90CL-D04A	
20	VGA HEATSINK MODULE D900C 無鉛	6-31-D90CN-202	
21	SCREW M1.6*3.5L K(T=0.8 D=4.5) BZ ICT NY 無鉛	6-35-82116-3R5	
22	FAN 55*20M 5V 0.32A 8S6005M2B 3300RPM APOWER D900C 無鉛	6-23-AD90C-032	
23	SCREW M2.5*6L K BZ ICT NY 無鉛	6-35-82125-6RA	
24	SCREW M2*4L 1 BZ ICT GTY-PATCH (T=0.8 D=4) 無鉛	6-35-C6120-4RB	
25	CARD READER BOARD V5.0A D900C 無鉛	6-77-D90CV-D05A	
26	BAT. 20MM 3V 210MAH W/CABLE 56MM CR2032CI-LF-MITSUBISHI 無鉛	6-23-22015-P2C	
27	M520G MYLAR FOR DDR 無鉛	6-40-M52GS-010	
28	CHOCK HEATSINK AL1050 D900C 無鉛	6-33-D90CN-010	
29	M520G K/B CONN MYLAR 無鉛	6-40-M52GS-060	
30	NB CHIP MYLAR D900C 無鉛	6-40-D90CS-040	
31	SCREW M2.5*4L K1 BK/O ICT NY 無鉛	6-35-B4125-4RA	
32	POWER TRIGER RUBBER SILICON D900C 無鉛	6-47-D90C4-010	
33	SLI CHIP MYLAR D900C 無鉛	6-40-D90CS-030	
34	[illegible] 無鉛	6-88-M55S1-531	
34	[illegible] 無鉛	6-88-M66S1-620	

Figure A - 5
MB (D900C/D901C)

HDD (D900C/D901C)

Figure A - 6
HDD (D900C/ D901C)

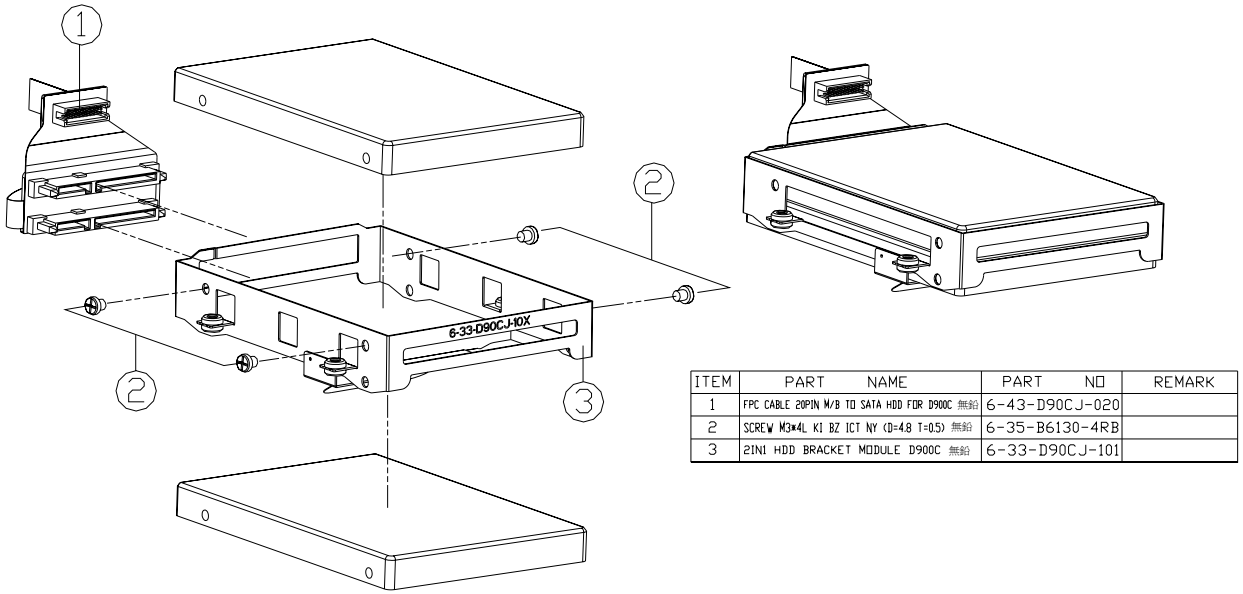

ITEM	PART NAME	PART NO	REMARK
1	FPC CABLE 20PIN M/B TO SATA HDD FOR D900C 無鉛	6-43-D90CJ-020	
2	SCREW M3*4L KI BZ ICT NY (D=4.8 T=0.5) 無鉛	6-35-B6130-4RB	
3	2IN1 HDD BRACKET MODULE D900C 無鉛	6-33-D90CJ-101	

2nd HDD (D900C/D901C)

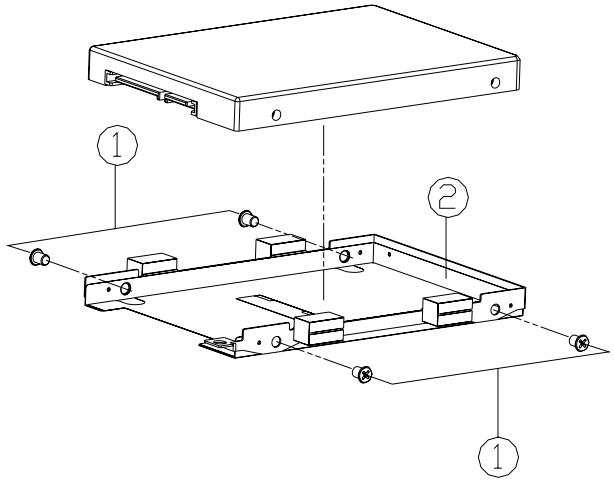

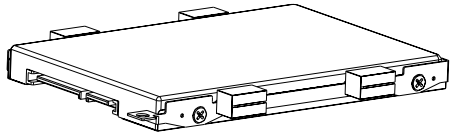

ITEM	PART NAME	PART NO	REMARK
1	SCREW M3*4L KI BZ ICT NY (D=4.8 T=0.5) 無鉛	6-35-B6130-4RB	
2	3RD HDD BRACKET SUS D900C 無鉛	6-33-D90CJ-021	

Figure A - 7
2nd HDD (D900C/ D901C)

COMBO (D900C/D901C)

Figure A - 8
COMBO (D900C/ D901C)

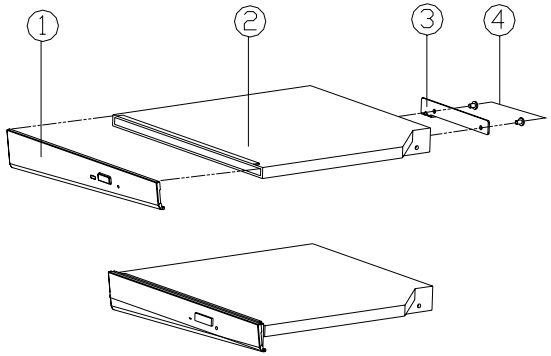

ITEM	PART NAME	PART NO	REMARK
1	SCREW M2*3L K1 N1 ICT GTY-PATCH	6-35-B1120-3RE	
2	CDROM LOCK BRACKET	6-33-D400Z-012	
3	CD-RW/DVD 5 1/4" 24X 12.7MM SCI5265 PHILIP	6-85-907PX-C02	
3	CD-RW/DVD 5 1/4" 24X 12.7MM UJDA770CL-A PANASONIC	6-85-907PX-P00	
4	COMBO BEZEL MODULE D900C	6-42-D90CX-101	

DVD-DUAL RW (D900C/D901C)

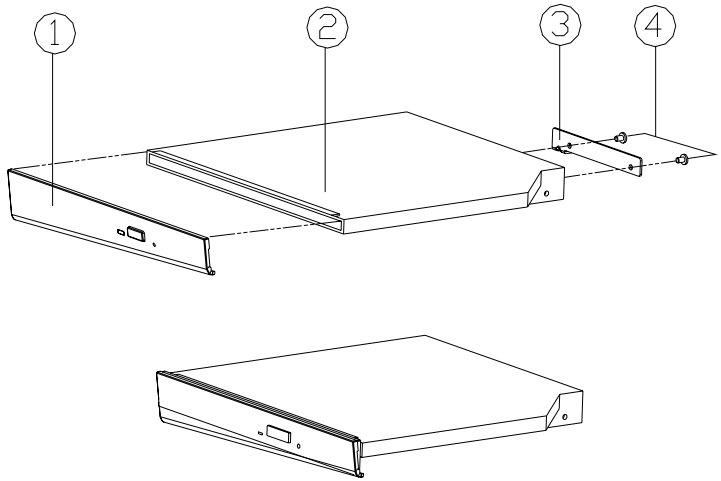

ITEM	PART NAME	PART NO	REMARK
1	SCREW M2*3L K1 NI ICT GTY-PATCH 無鉛	6-35-B1120-3RE	
2	CDROM LOCK BRACKET 無鉛	6-33-D400Z-012	
3	DVD/DUAL RW 5 1/4" 8X 12.7MM AD-7530A QSI 無鉛	6-85-A078X-C08	
3	DVD/DUAL RW 5 1/4" 8X 12.7MM TS-L632D TSST 無鉛	6-85-A078X-T02	
4	ODD SUPER MULTI BEZEL MODULE D900C 無鉛	6-42-D90CQ-101	

Figure A - 9
DVD-DUAL RW (D900C/D901C)

Appendix B:Schematic Diagrams

This appendix has circuit diagrams of the ***D900C/D901C*** notebook's PCB's. The following table indicates where to find the appropriate schematic diagram.

Diagram - Page	Diagram - Page	Diagram - Page
BLOCK DIAGRAM - Page B - 2	*BR03 PCI-E & Straps 1/3 - Page B - 16*	*AC-In, Charger - Page B - 30*
CLOCK GENERATOR - Page B - 3	*BR03 PCI-E Interface 2/3 - Page B - 17*	*Power 1.2V/ 1.25V - Page B - 31*
CPU-1 - Page B - 4	*BR03 Power & GND 3/3 - Page B - 18*	*Power 1.5V/ 1.05V/ 2.5V - Page B - 32*
CPU-2 - Page B - 5	*DVI/ CRT - Page B - 19*	*Power 1.8V/ 0.9V/ 12V - Page B - 33*
Intel P965 CPU Interface 1/4 - Page B - 6	*Panel CON/ LED Indicator - Page B - 20*	*Power 3.3V/ 5V - Page B - 34*
Intel P965 PCI- E I/F 2/4 - Page B - 7	*1394/ Card Reader (TI PCI7402) - Page B - 21*	*VCore Power - Page B - 35*
Intel P965 Memory I/F 3/4 - Page B - 8	*GLAN RTL8111B - Page B - 22*	*Audio Board - Page B - 36*
DDRII SODIMM - Page B - 9	*Audio ALC888/ Amplifier - Page B - 23*	*Card Reader Board - Page B - 37*
Intel P965 Power 4/4 - Page B - 10	*KBC-H8/2111 - Page B - 24*	*Click Board - Page B - 38*
ICH8 PCI, DMI, CPU, IRQ - Page B - 11	*JM368 PCIE to PATA - Page B - 25*	*HotKey Board - Page B - 39*
ICH8 LPC, ATA, USB, GPIO - Page B - 12	*Mini Card & TV Out/ Video In - Page B - 26*	*Switch Board - Page B - 40*
ICH8 Power - Page B - 13	*Daughter Connection - Page B - 27*	*USB Board - Page B - 41*
MXM PCI-E CON1 - Page B - 14	*CCD/ BT/ FAN/ ROM - Page B - 28*	
MXM PCI-E CON2 - Page B - 15	*Mini PCI/ MDC/ New Card - Page B - 29*	

Table B - 1
Schematic Diagrams

Version Note

The schematic diagrams in this chapter are based upon version **6-7P-D90C7-006**. If your mainboard (or other boards) are a later version, please check with the Service Center for updated diagrams (if required).

BLOCK DIAGRAM

Sheet 1 of 40
BLOCK DIAGRAM

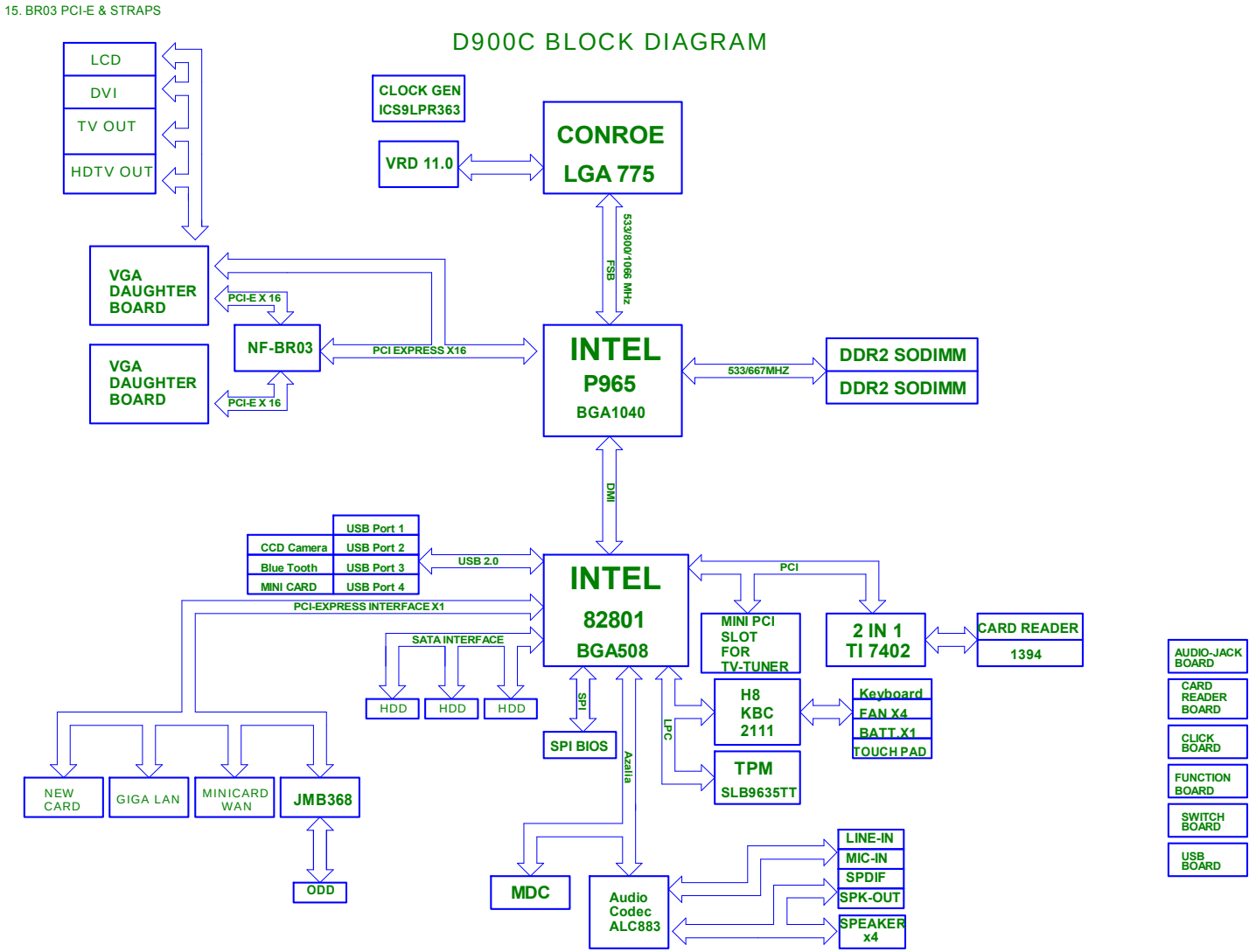

CLOCK GENERATOR

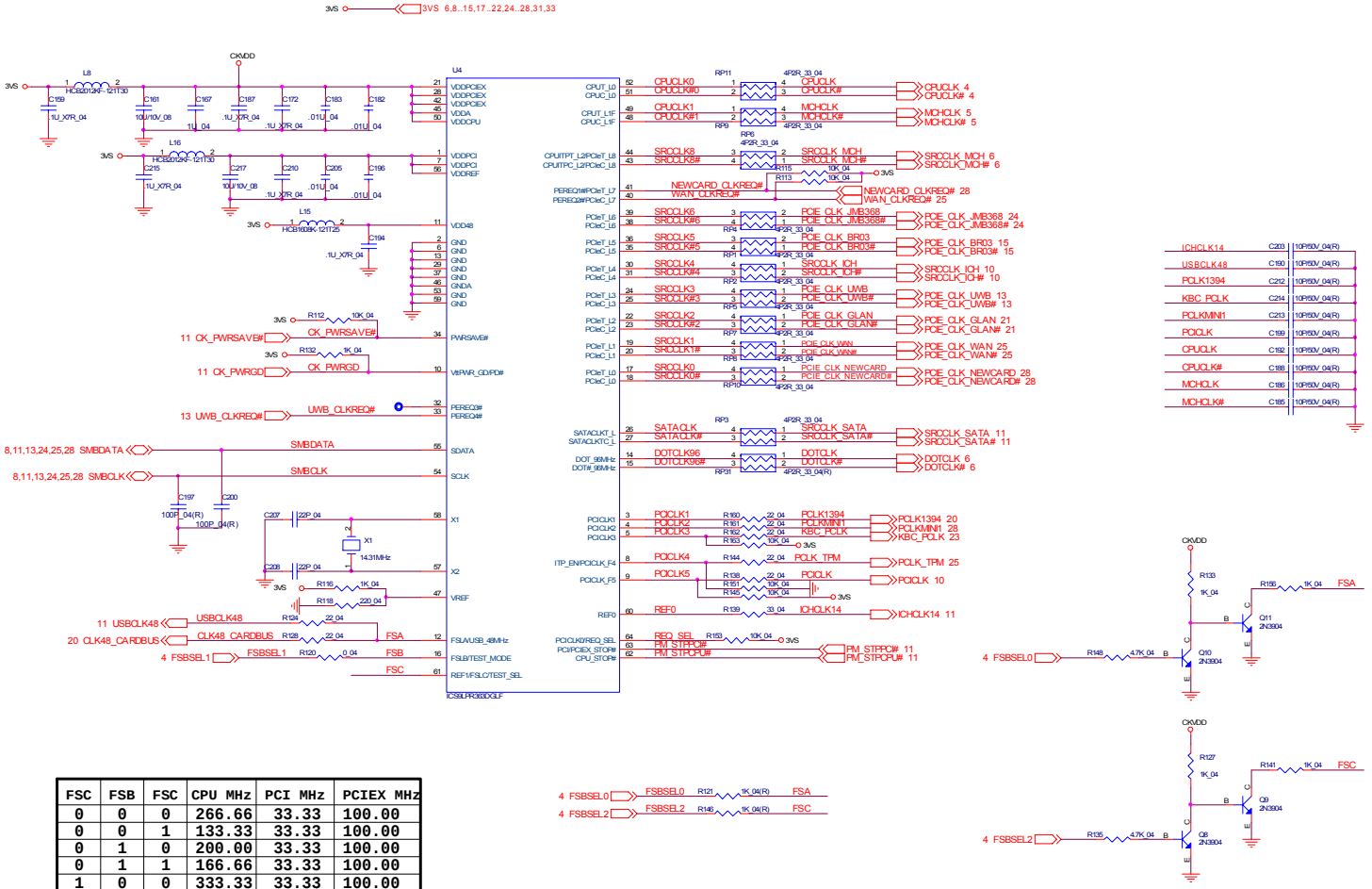

FSC	FSB	FSC	CPU MHz	PCI MHz	PCIEX MHz
0	0	0	266.66	33.33	100.00
0	0	1	133.33	33.33	100.00
0	1	0	200.00	33.33	100.00
0	1	1	166.66	33.33	100.00
1	0	0	333.33	33.33	100.00
1	0	1	100.00	33.33	100.00
1	1	0	400.00	33.33	100.00
1	1	1	200.00	33.33	100.00

Sheet 2 of 40
CLOCK
GENERATOR

CPU-1

Sheet 3 of 40
CPU-1

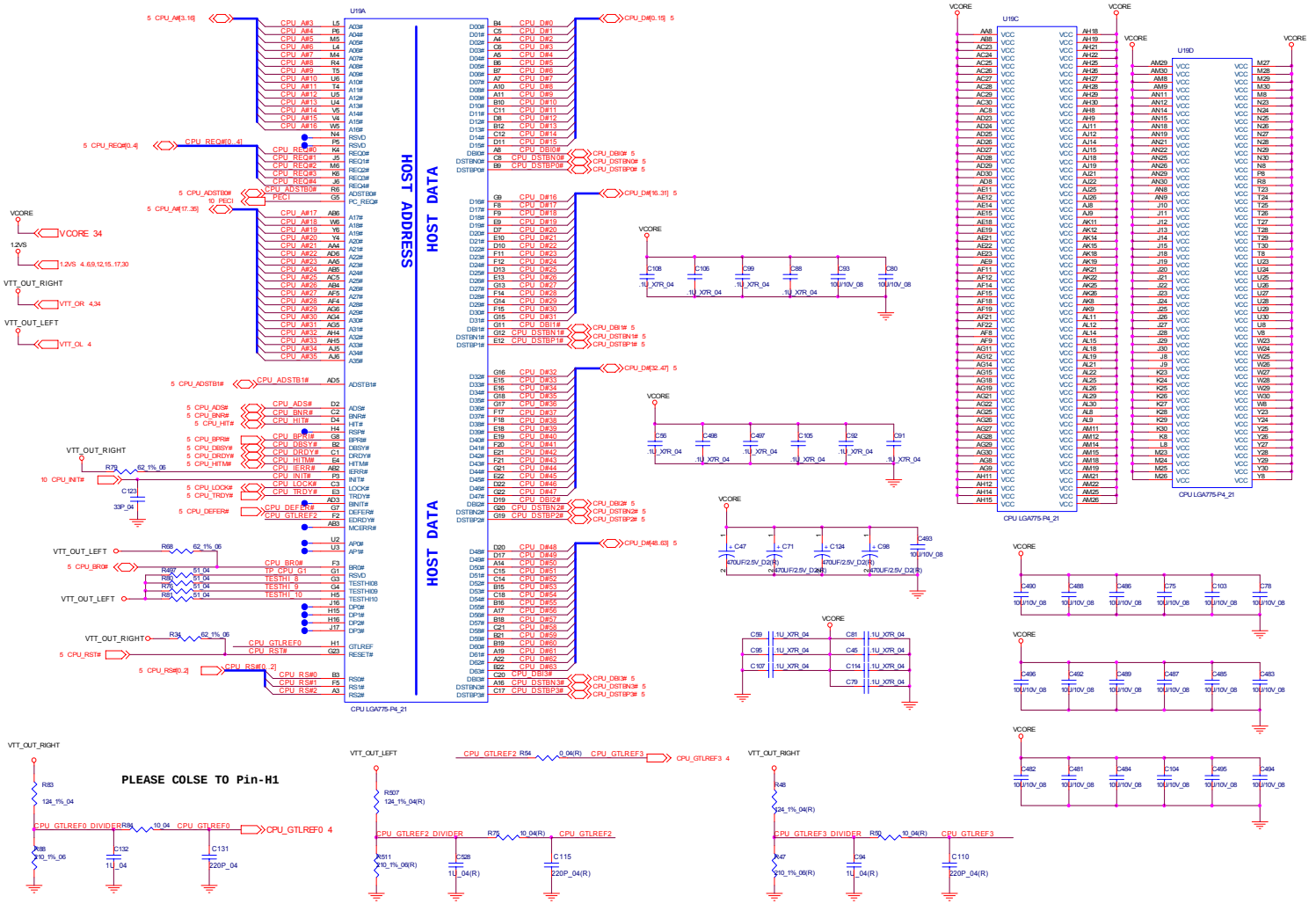

CPU-2

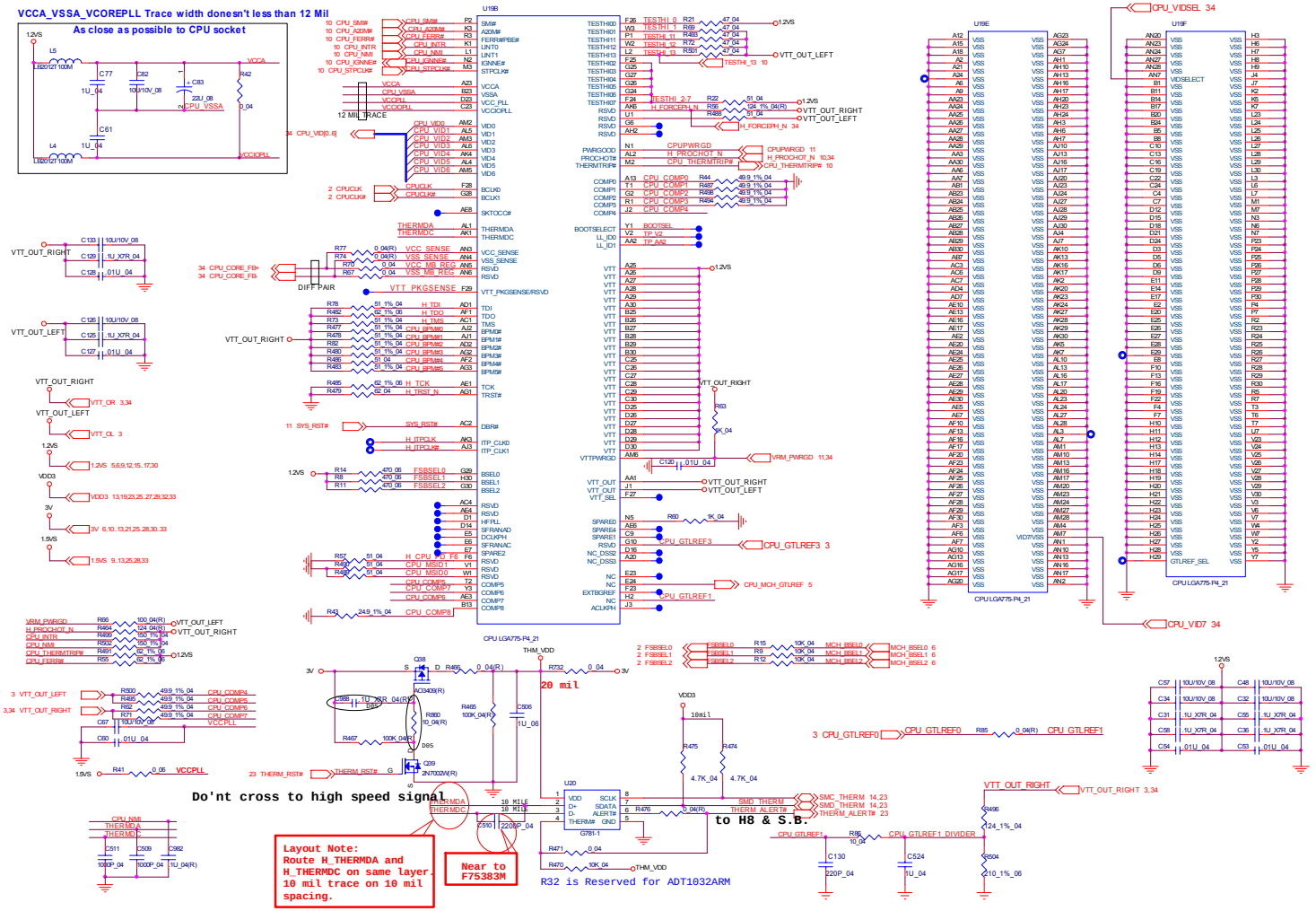

Sheet 4 of 40
CPU-2

Intel P965 CPU Interface 1/4

Sheet 5 of 40
Intel P965 CPU
Interace
1/4

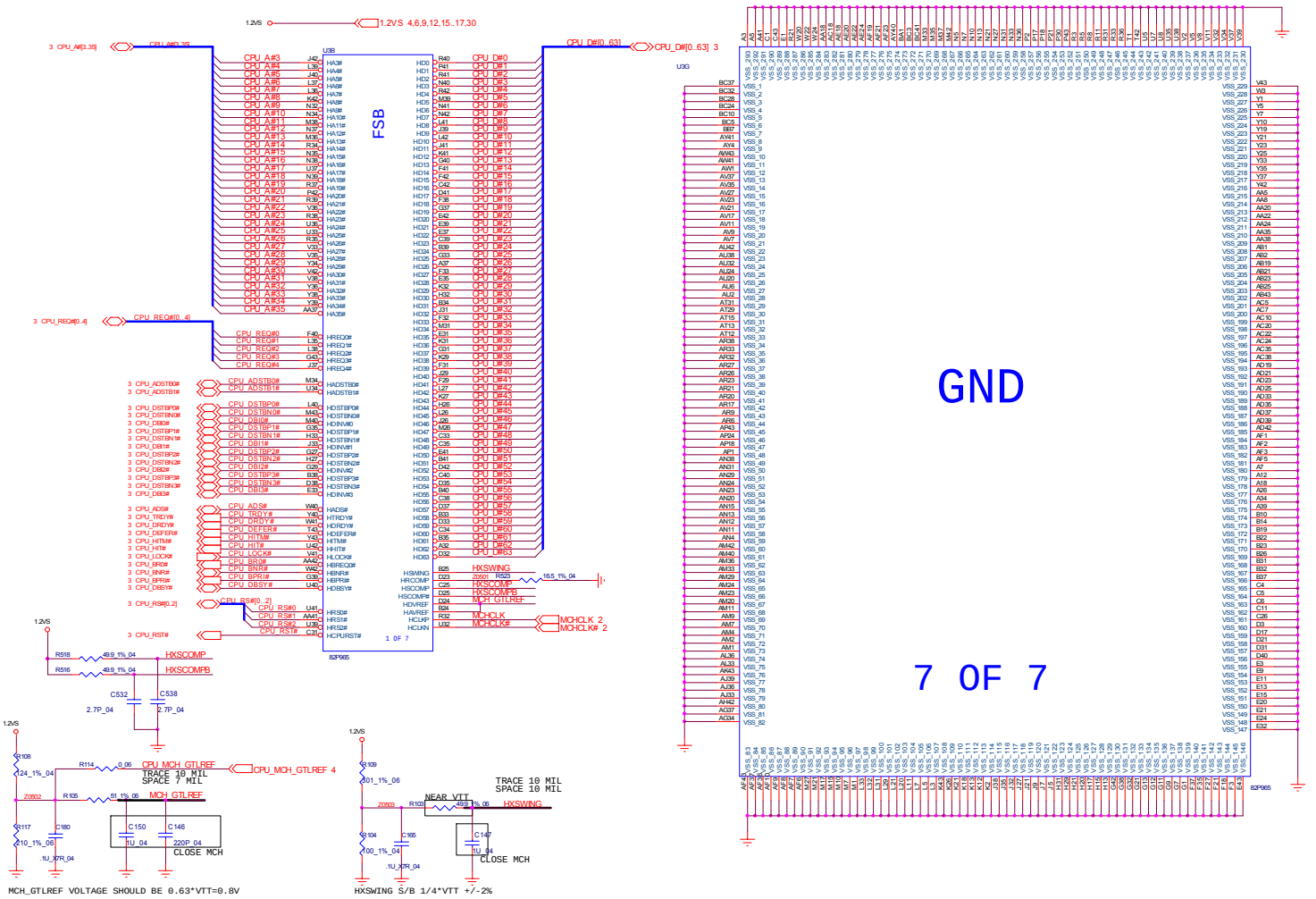

Intel P965 PCI- E I/F 2/4

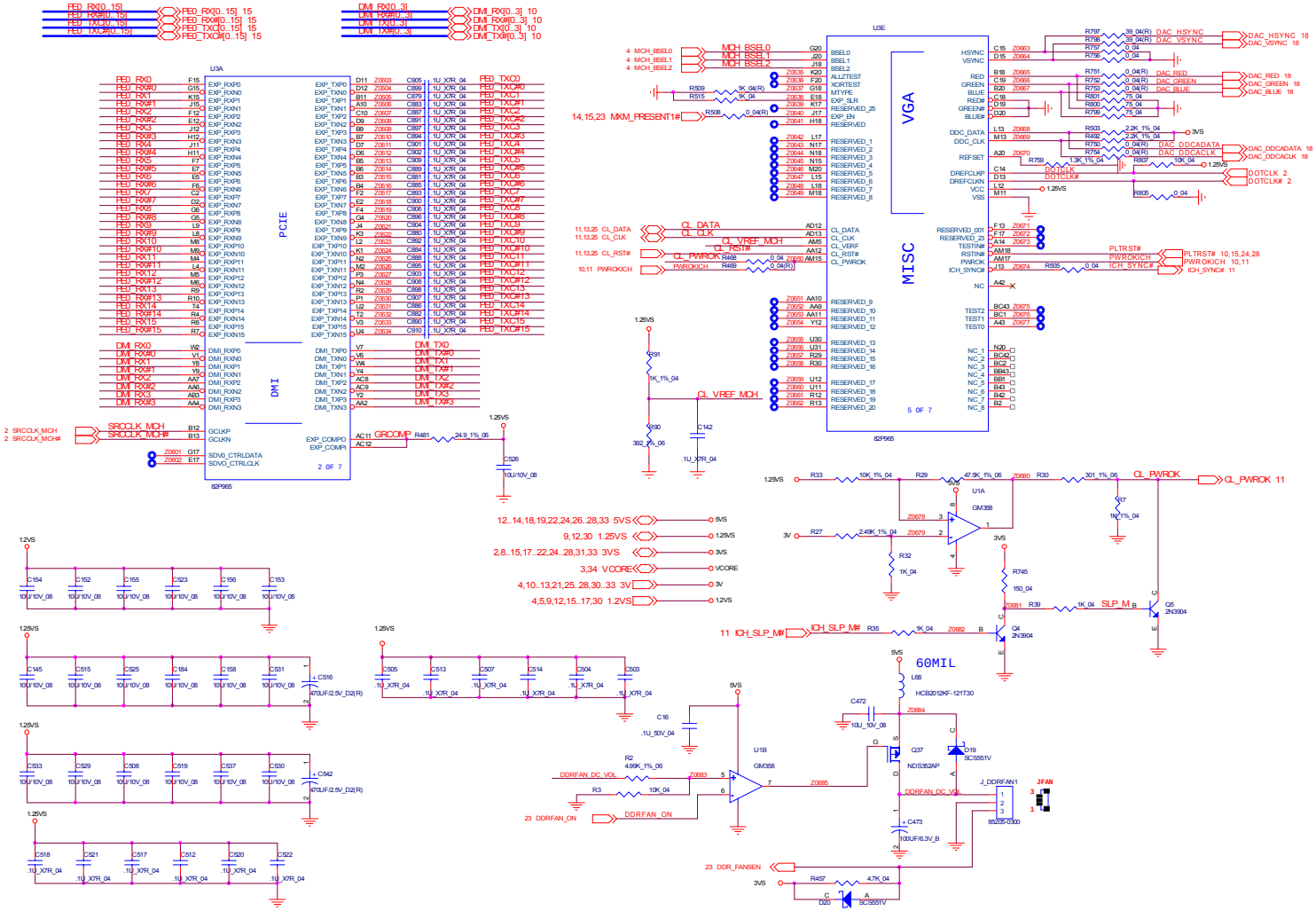

Sheet 6 of 40
Intel P965 PCI-E I/F
2/4

Intel P965 Memory I/F 3/4

Sheet 7 of 40
Intel P965
Memory I/F
3/4

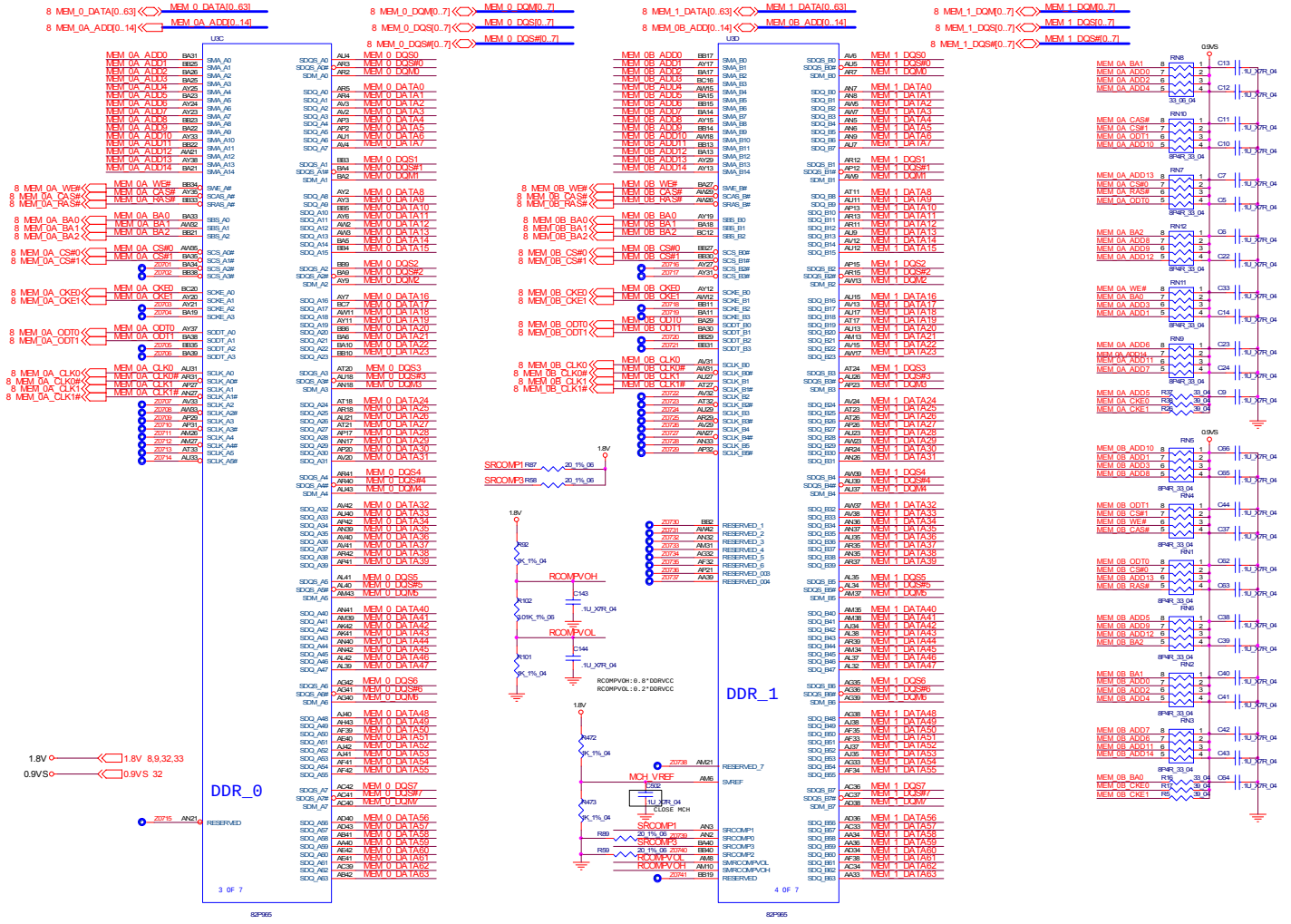

DDRII SODIMM

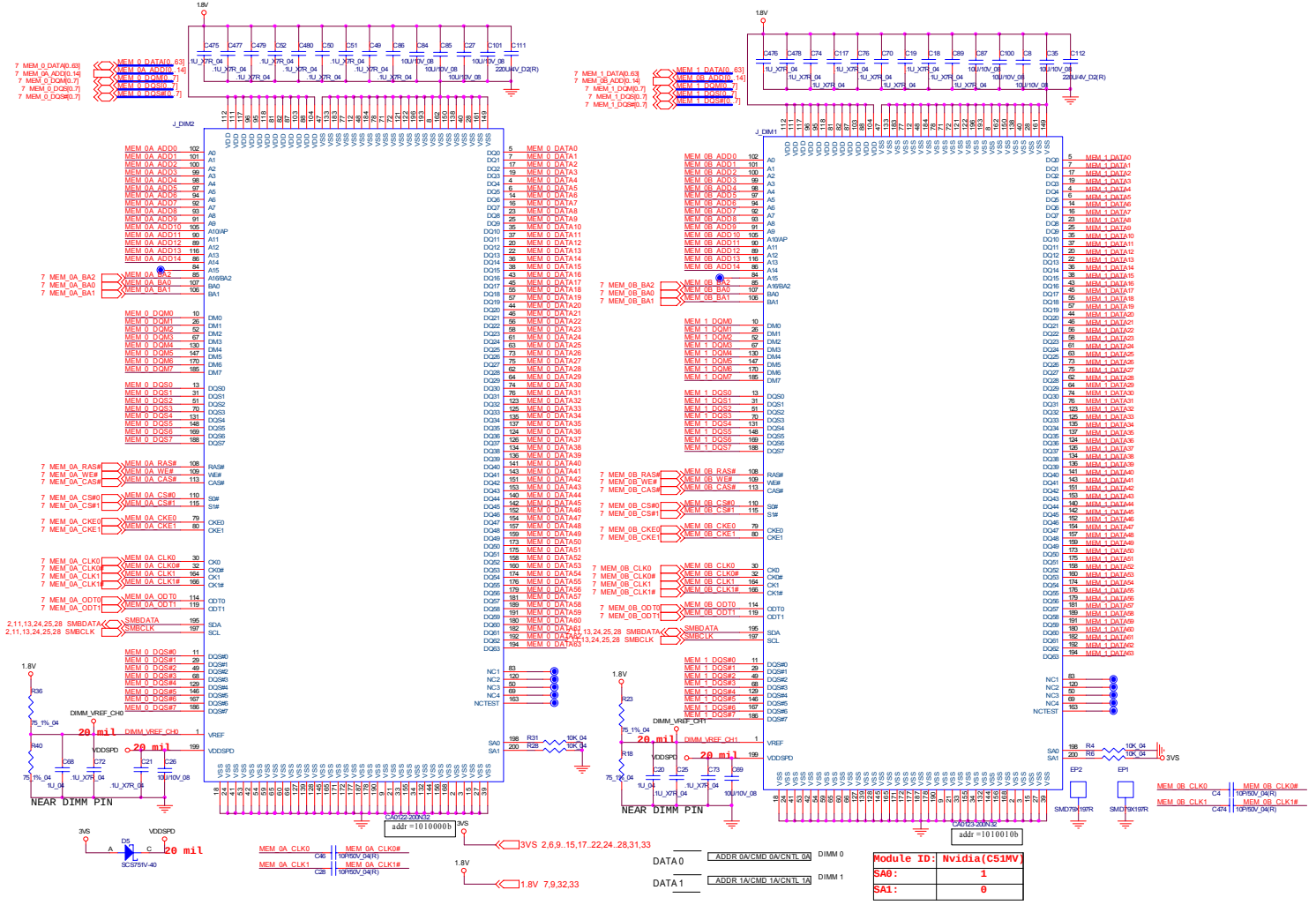

Sheet 8 of 40
DDRII SODIMM

B.Schematic Diagrams

Intel P965 Power 4/4

Sheet 9 of 40
Intel P965 Power 4/4

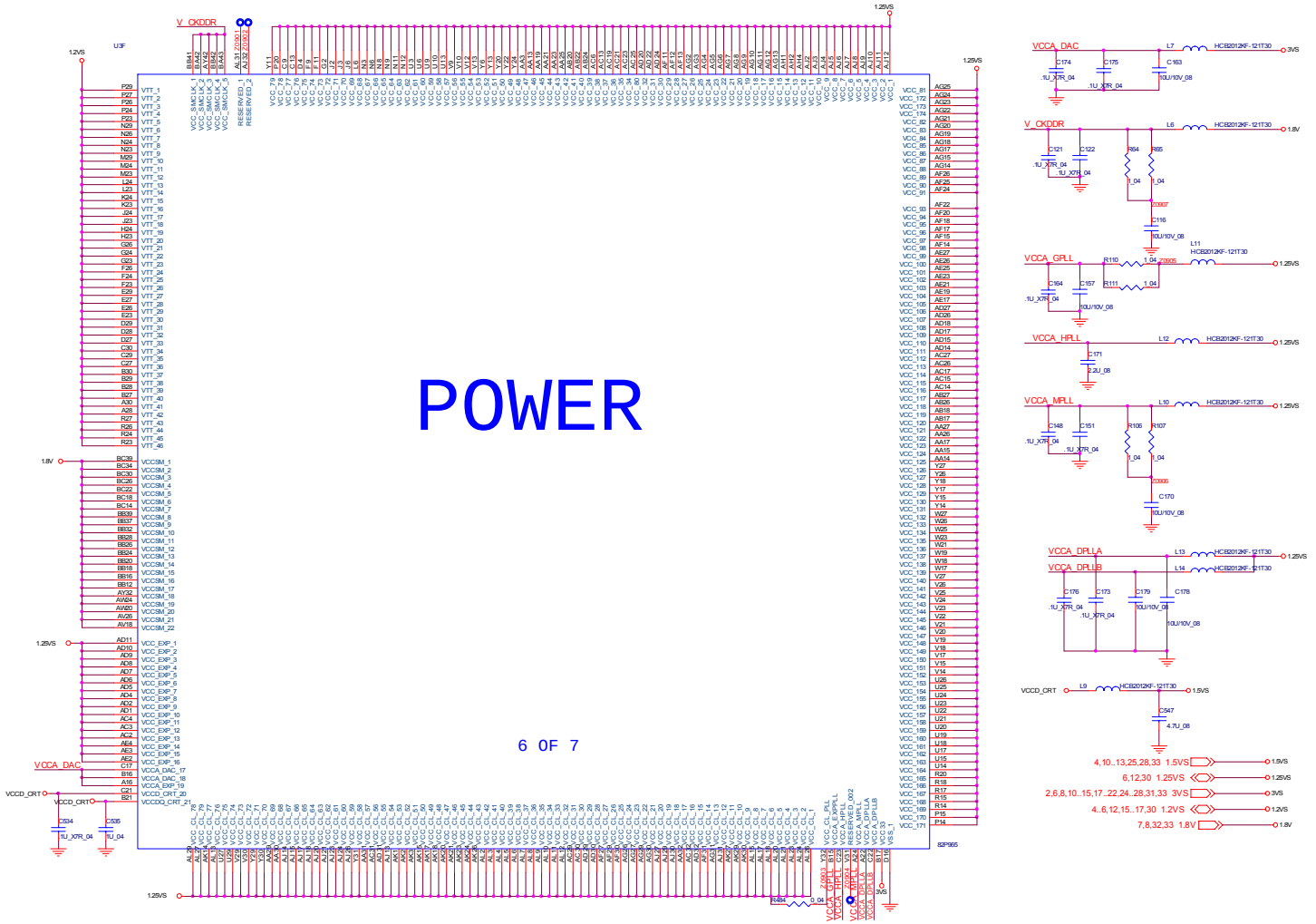

ICH8 PCI, DMI, CPU, IRQ

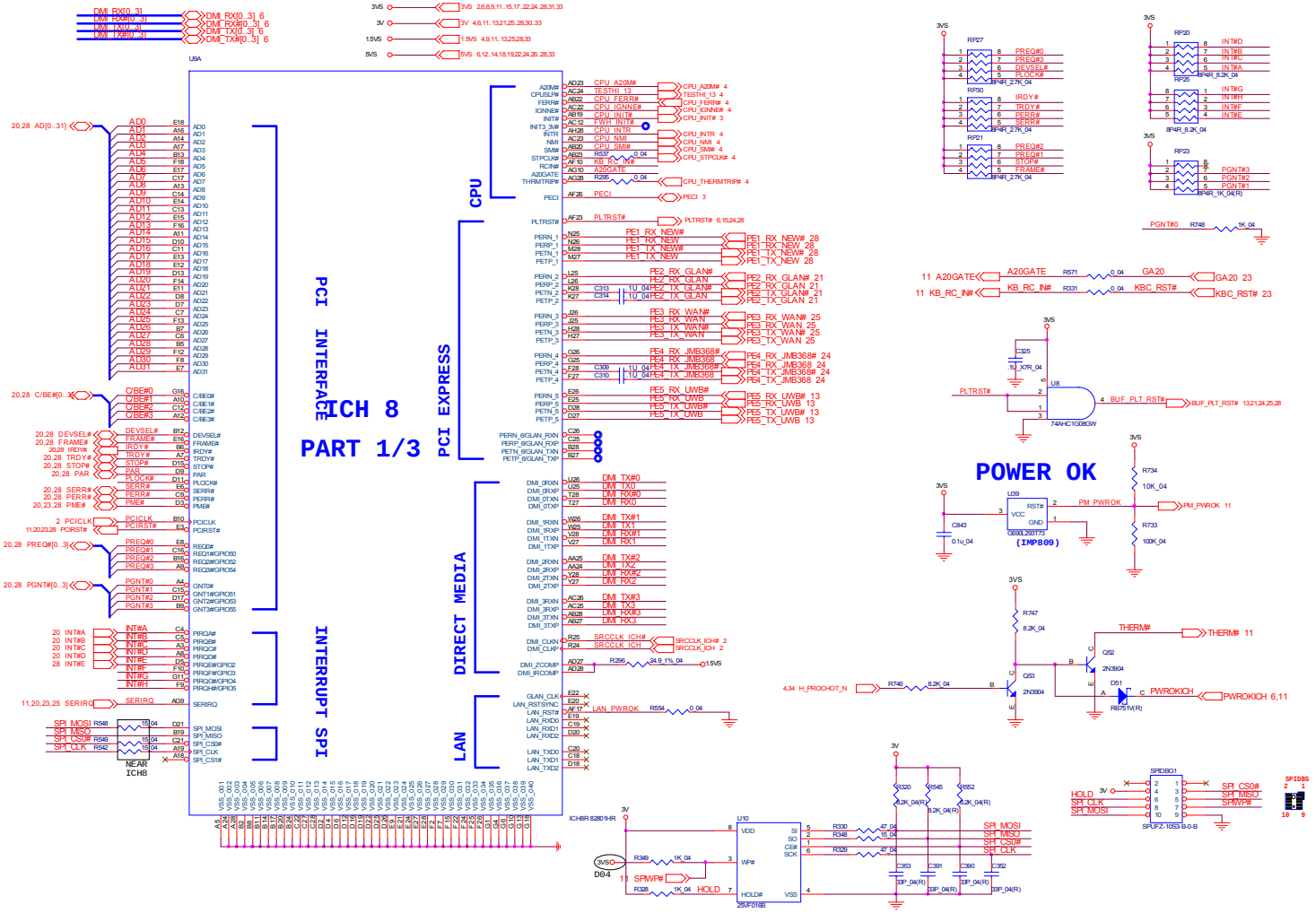

Sheet 10 of 40
ICH8 PCI, DMI, CPU, IRQ

ICH8 LPC, ATA, USB, GPIO

Sheet 11 of 40
ICH8 LPC, ATA, USB, GPIO

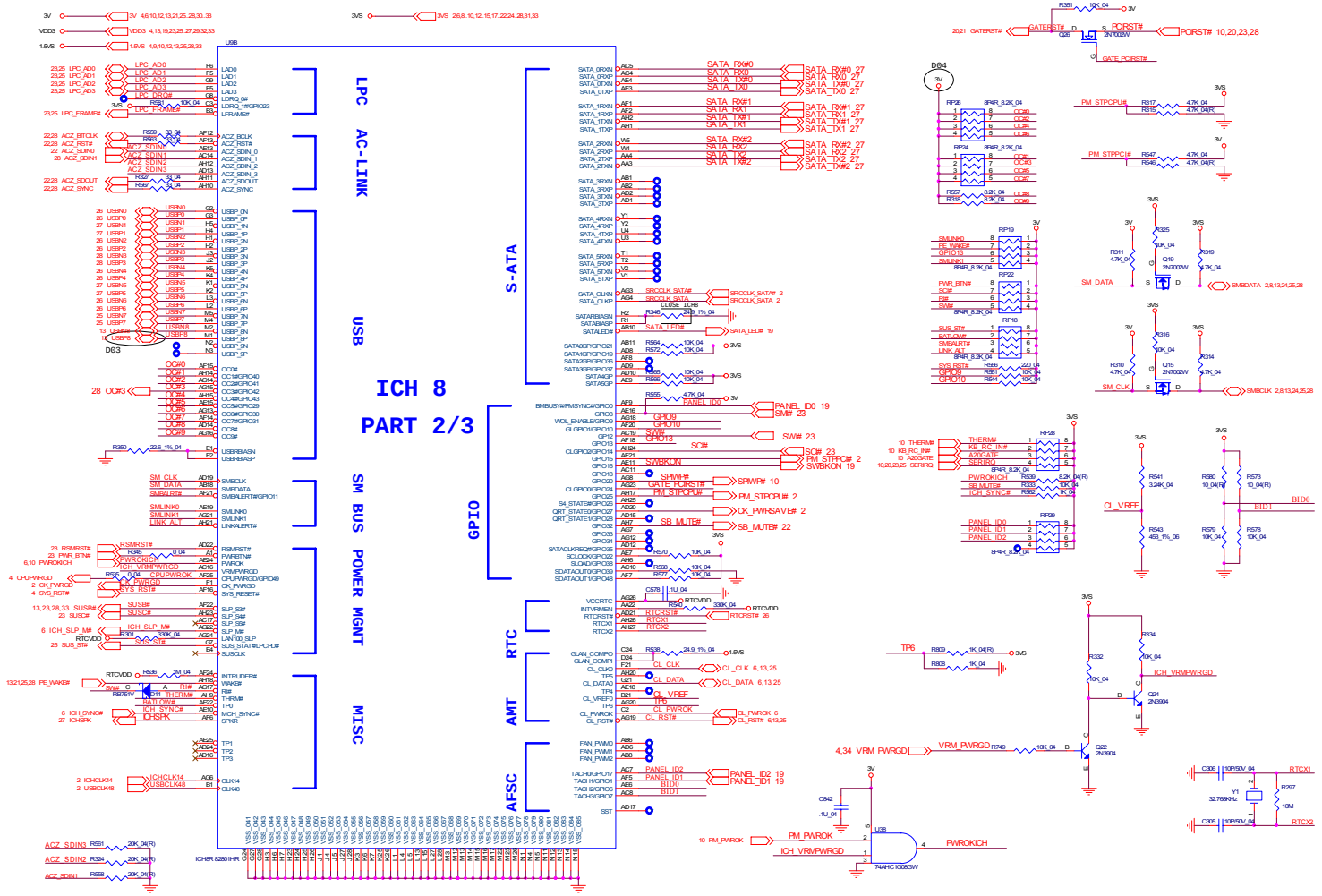

ICH8 Power

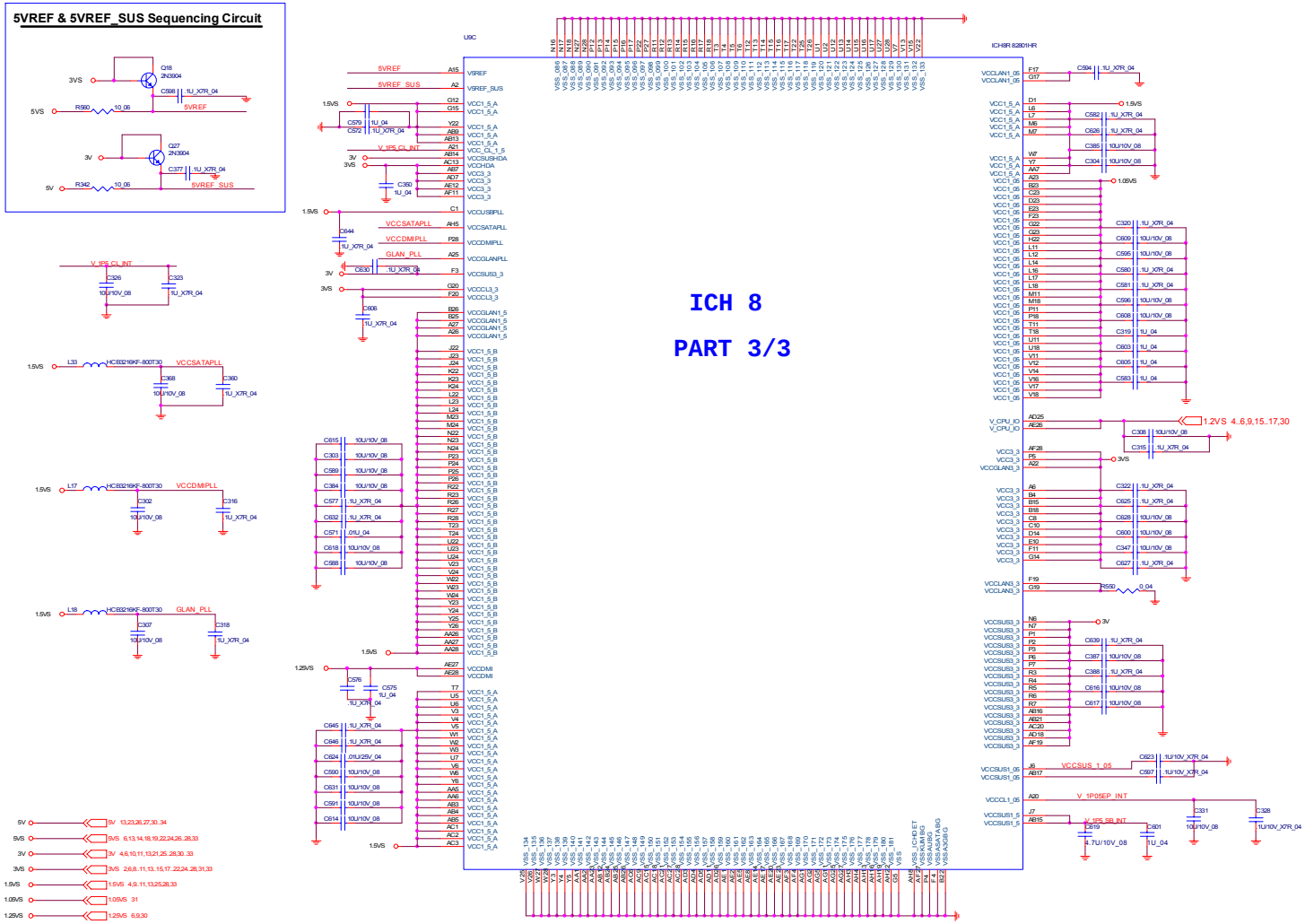

Sheet 12 of 40
ICH8 Power

MXM PCI-E CON1

Sheet 13 of 40
MXM PCI-E CON1

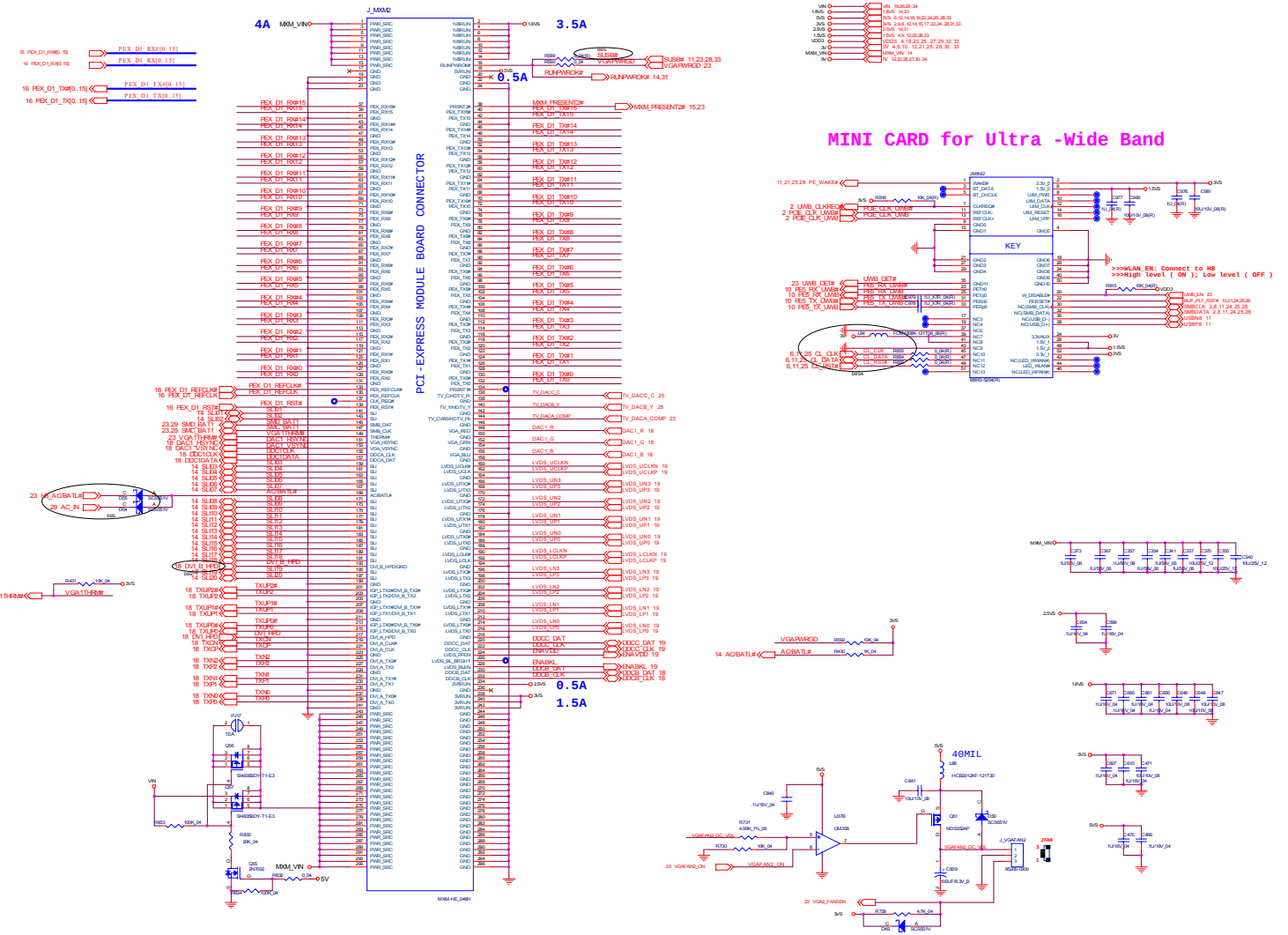

MXM PCI-E CON2

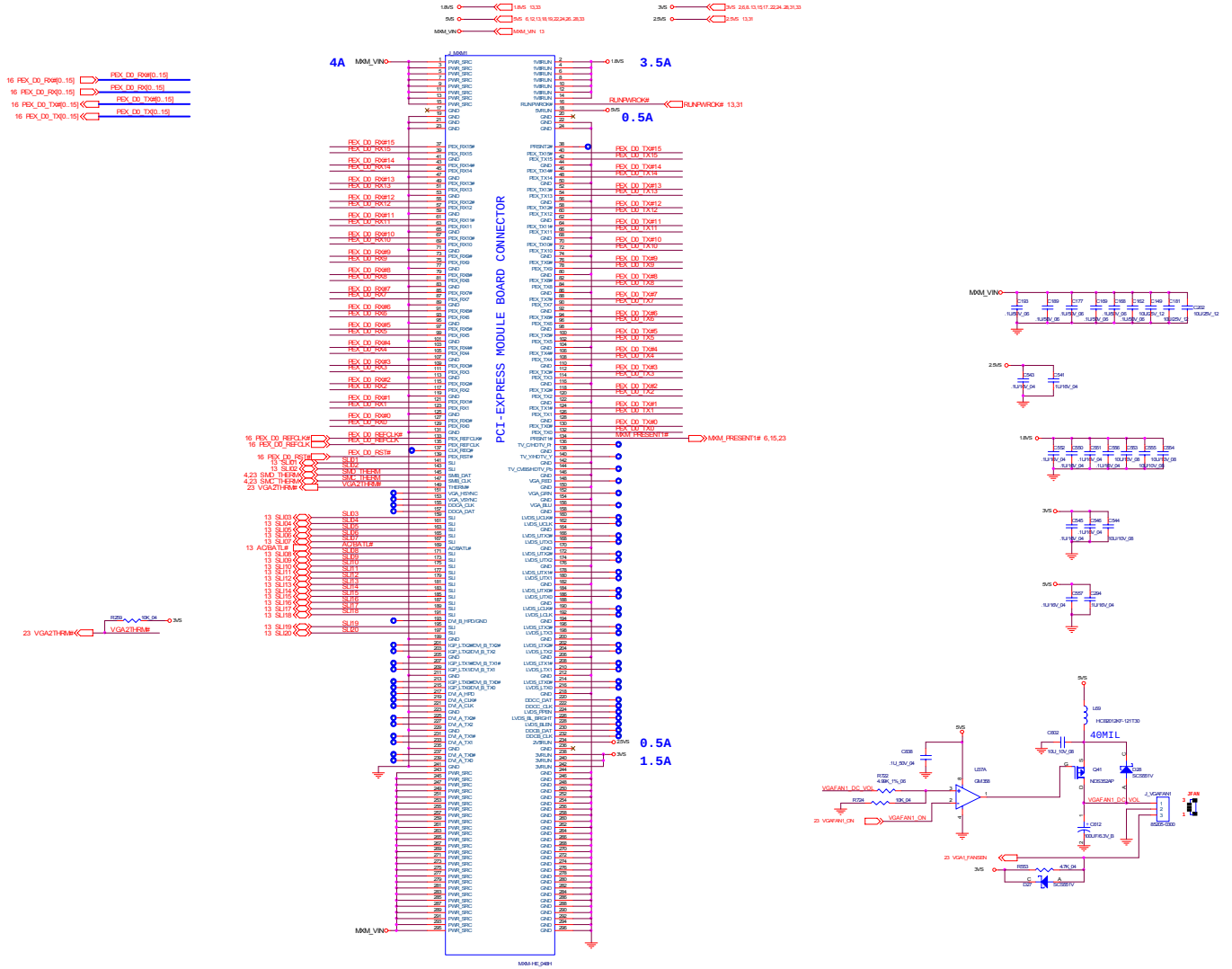

Sheet 14 of 40
MXM PCI-E CON2

BR03 PCI-E & Straps 1/3

Sheet 15 of 40
BR03 PCI-E & Strap 1/3

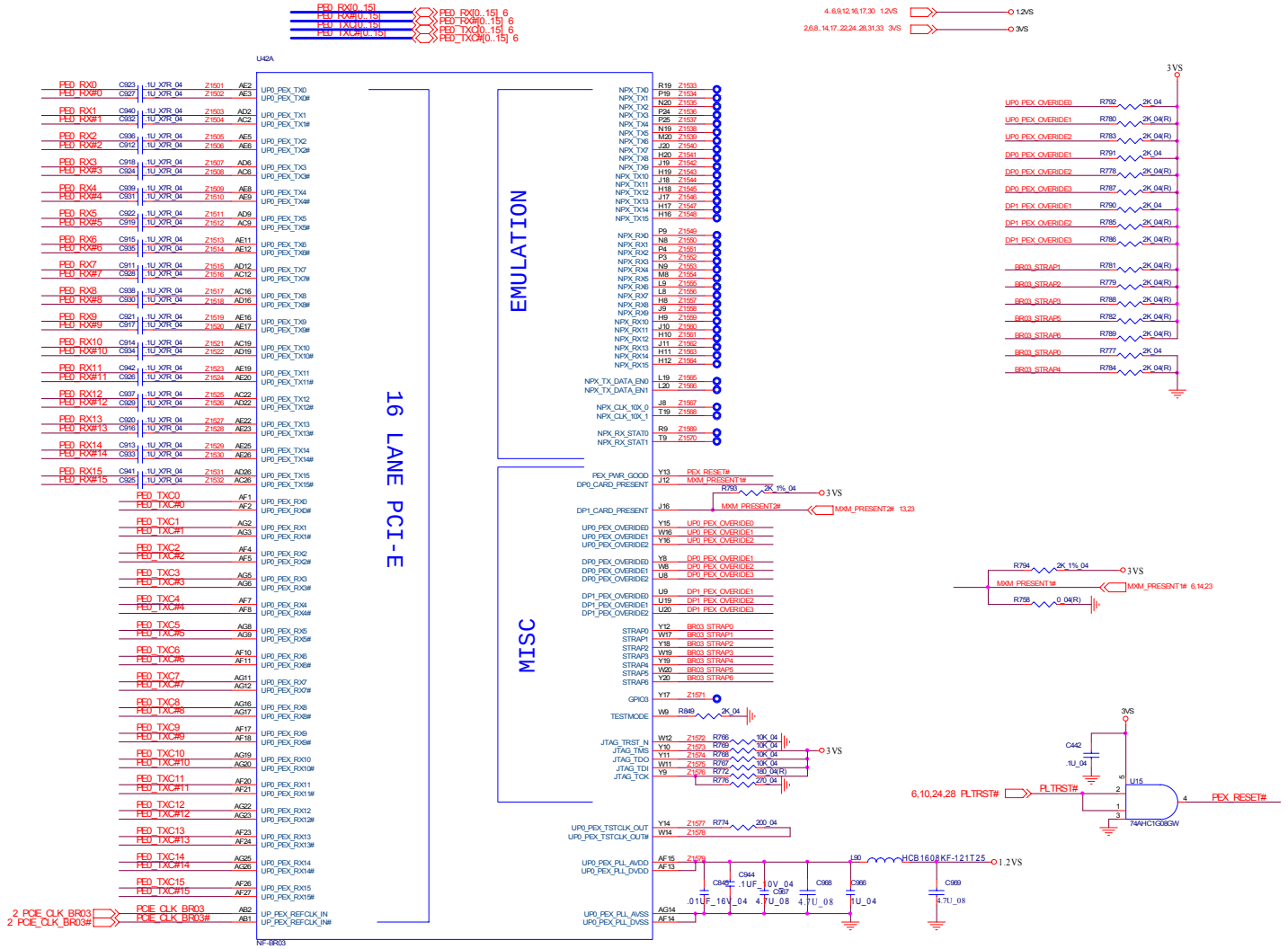

BR03 PCI-E Interface 2/3

Sheet 16 of 40
BR03 PCI-E
Interface 2/3

BR03 Power & GND 3/3

Sheet 17 of 40
BR03 Power & GND 3/3

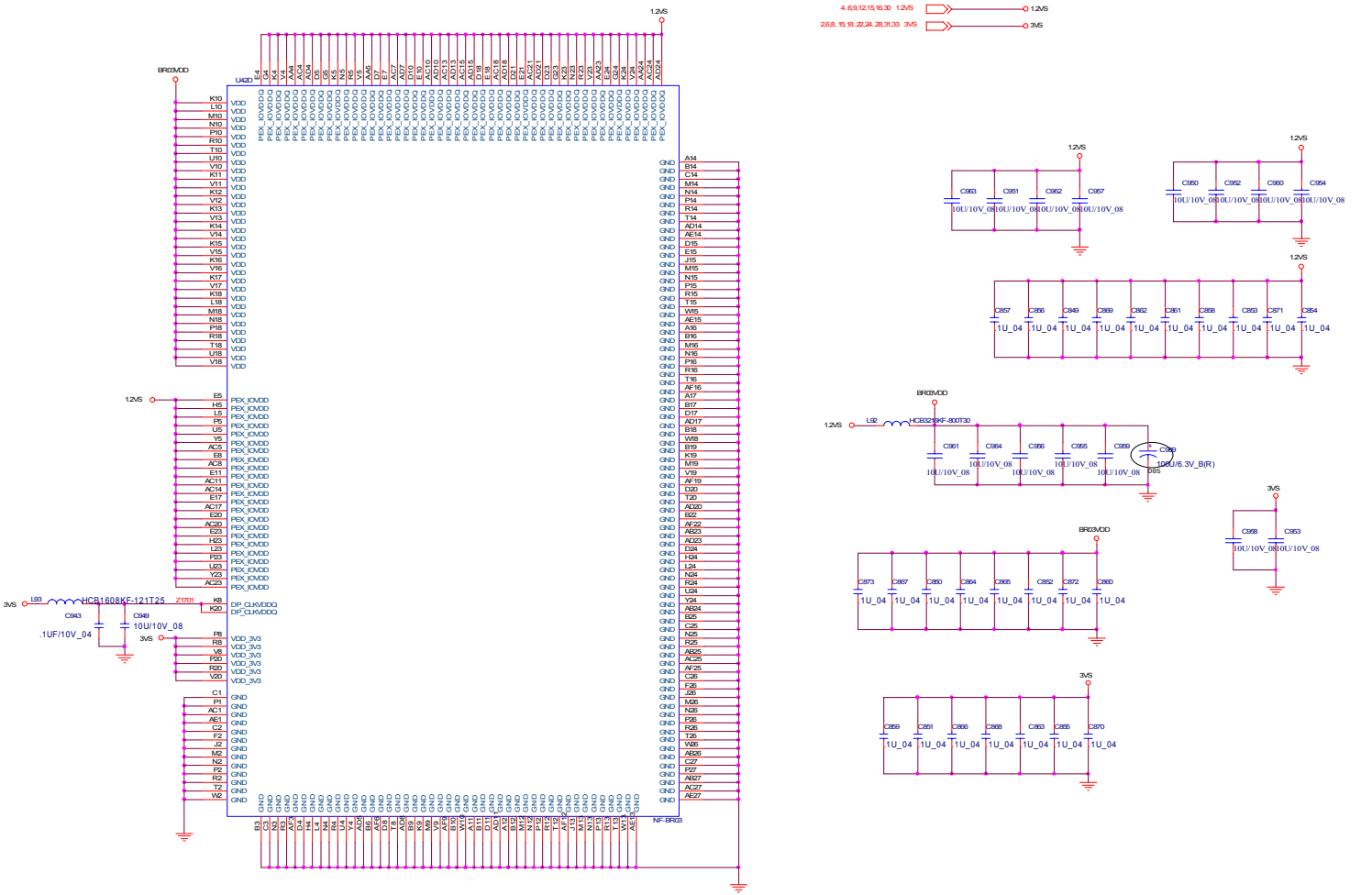

DVI/ CRT

DVI PORT

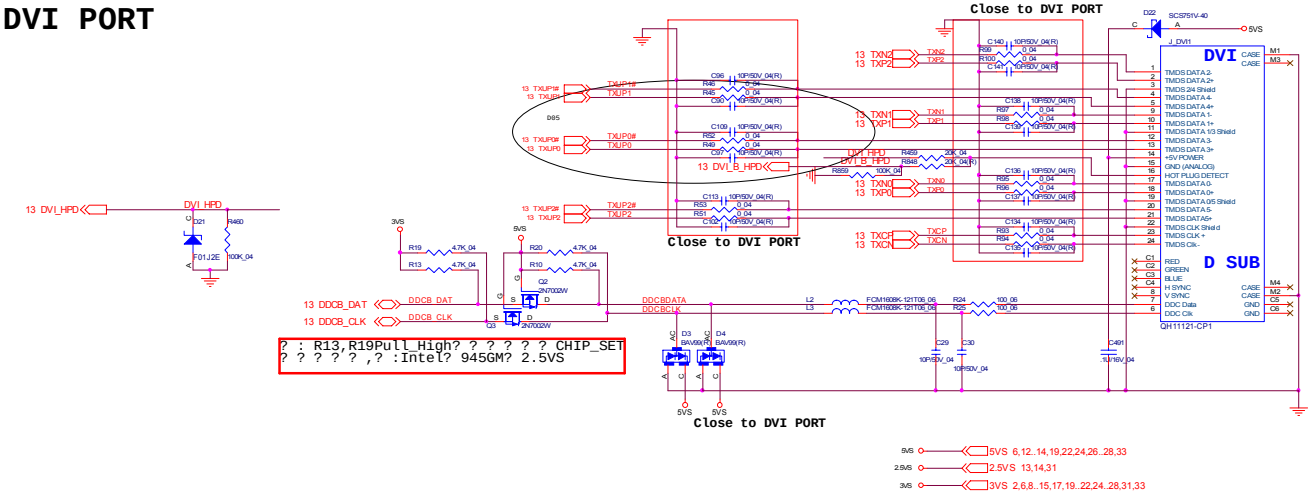

CRT PORT

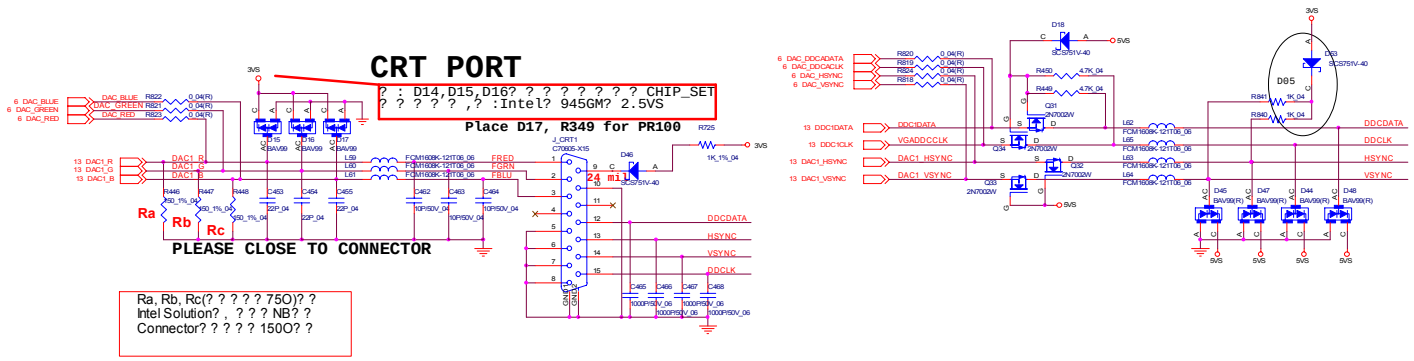

Sheet 18 of 40
DVI/ CRT

Panel CON/ LED Indicator

Sheet 19 of 40
Panel Con/
LED Indicator

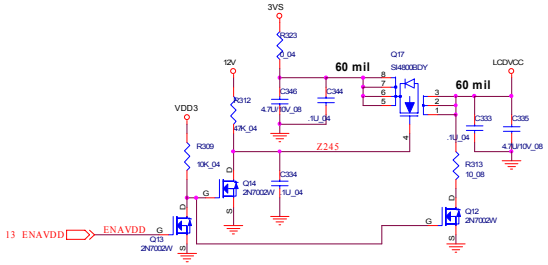

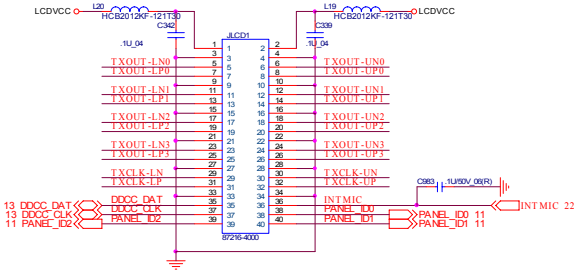

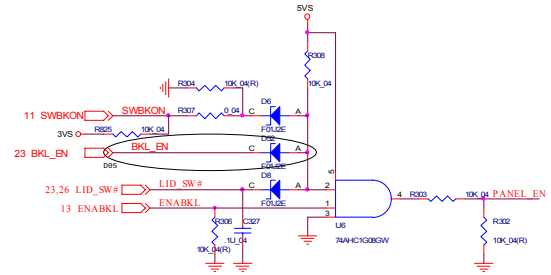

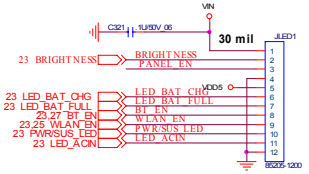

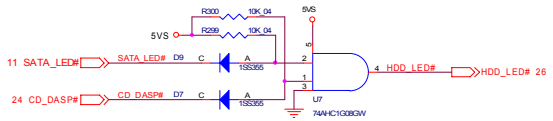

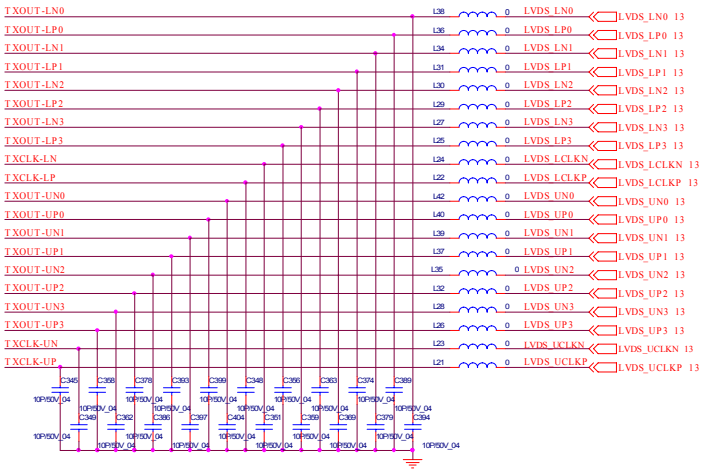

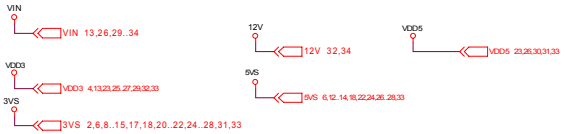

1394/ Card Reader (TI PCI7402)

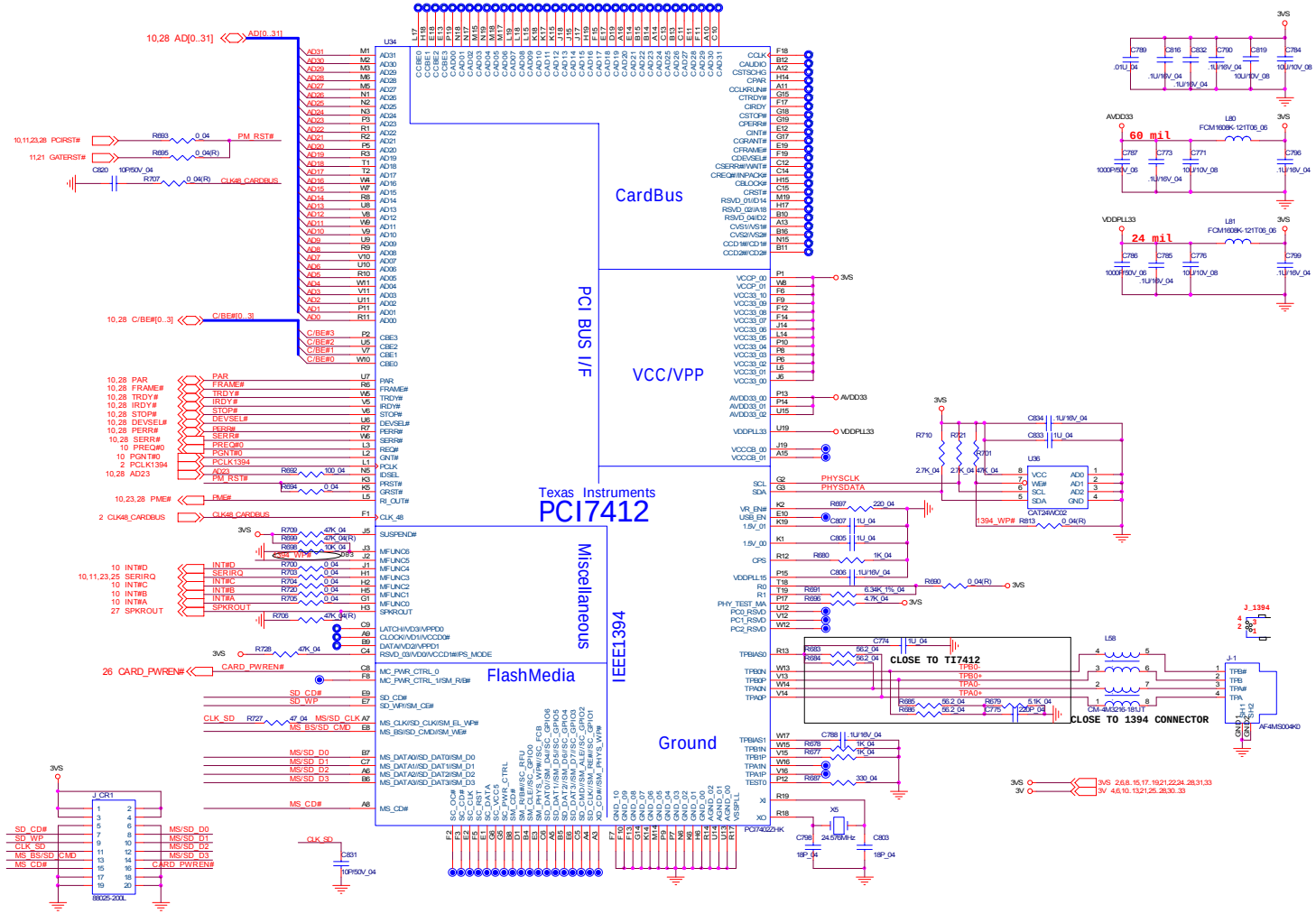

Sheet 20 of 40
1394/ Card Reader
(TI PCI7402)

GLAN RTL8111B

Sheet 21 of 40
GLAN RTL8111B

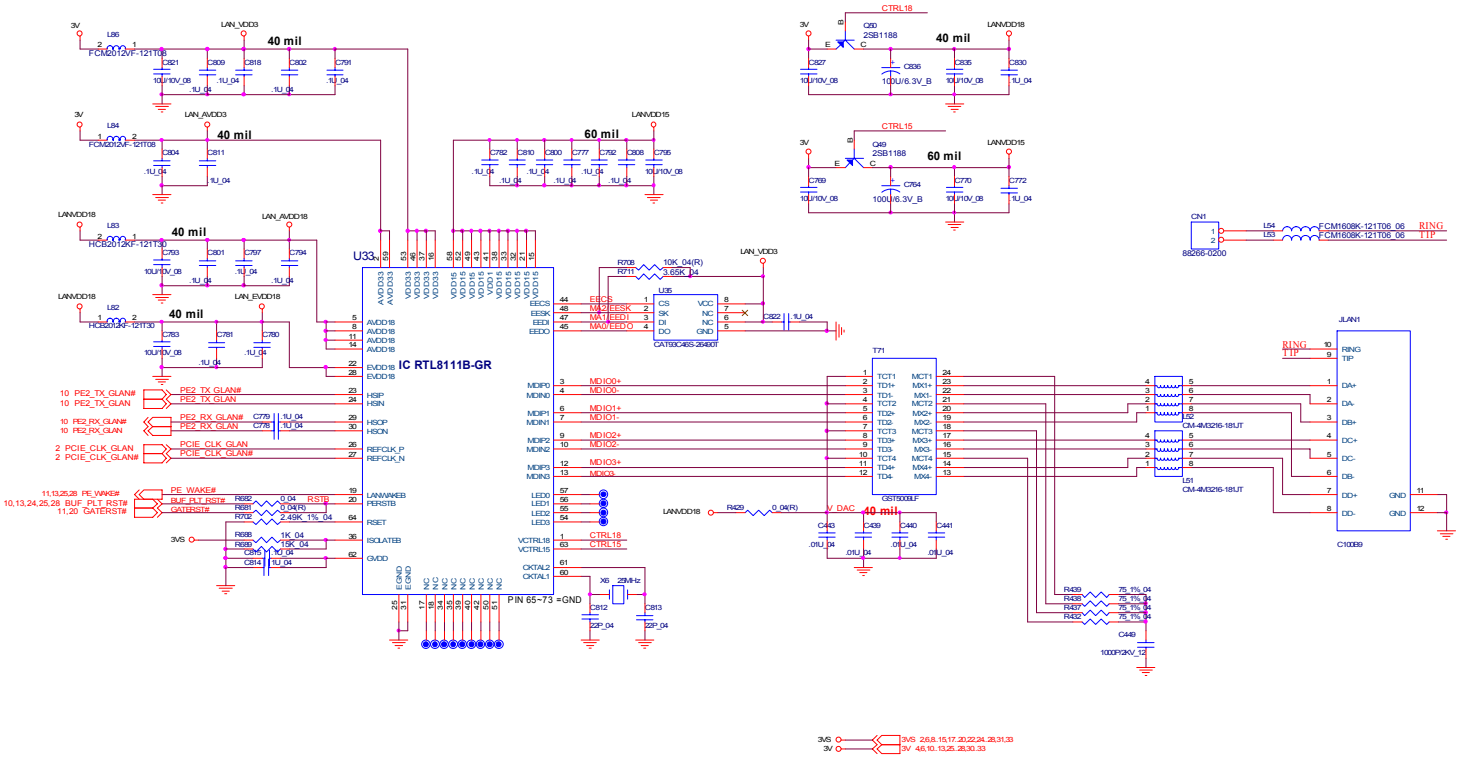

Audio ALC888/ Amplifier

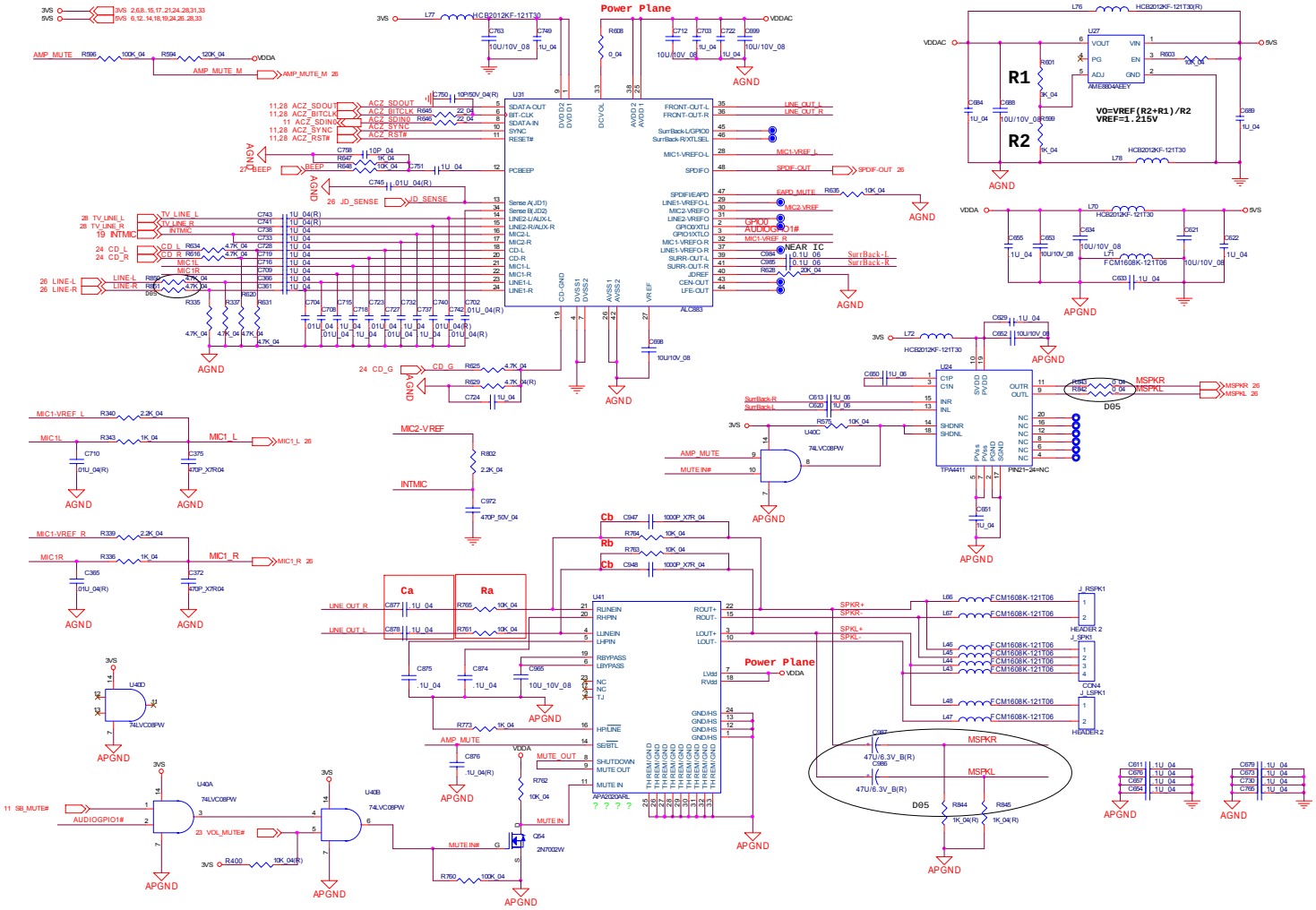

Sheet 22 of 40
Audio ALC888/
Amplifier

KBC-H8/2111

Sheet 23 of 40
KBC-H8/2111

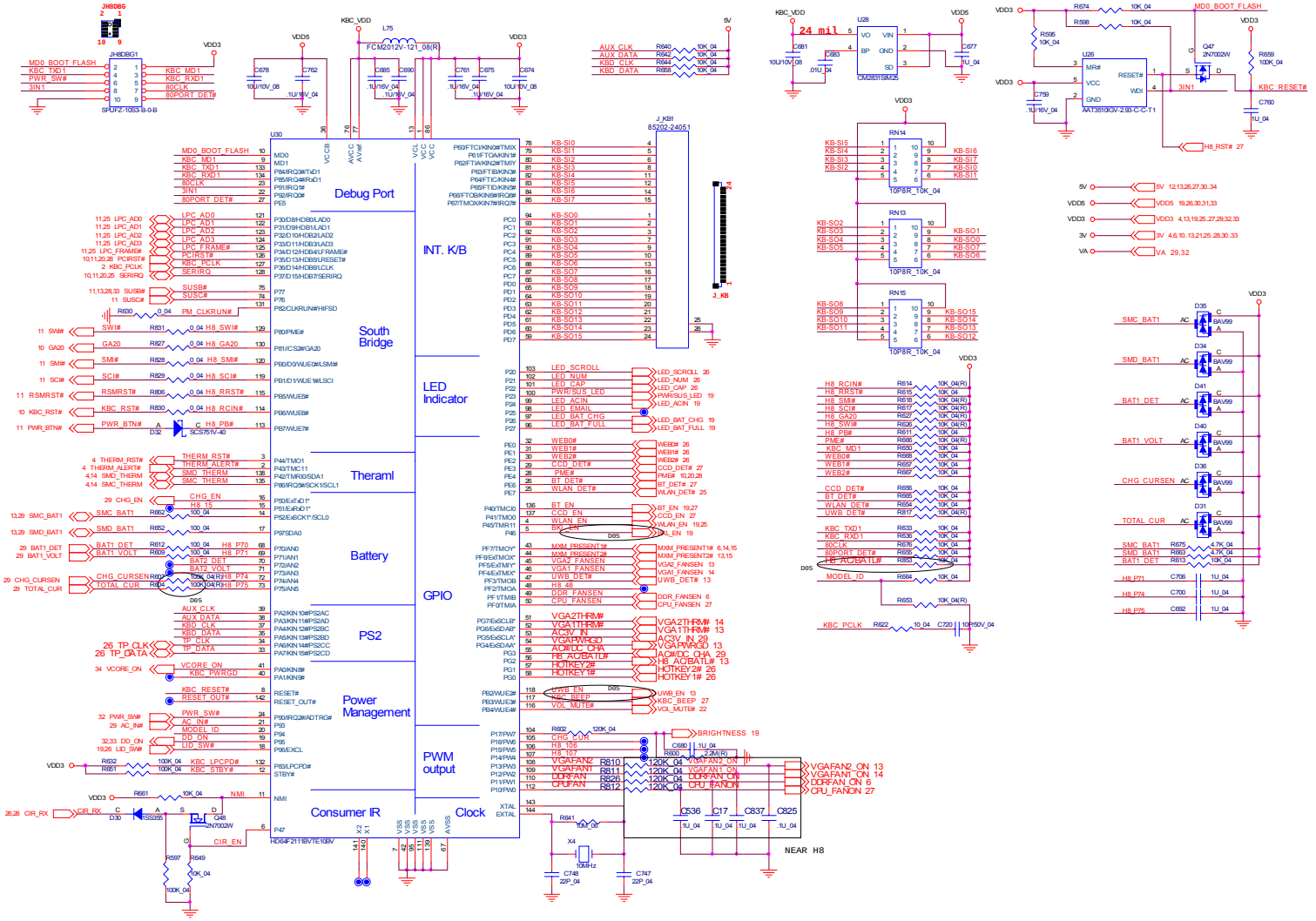

JM368 PCIE to PATA

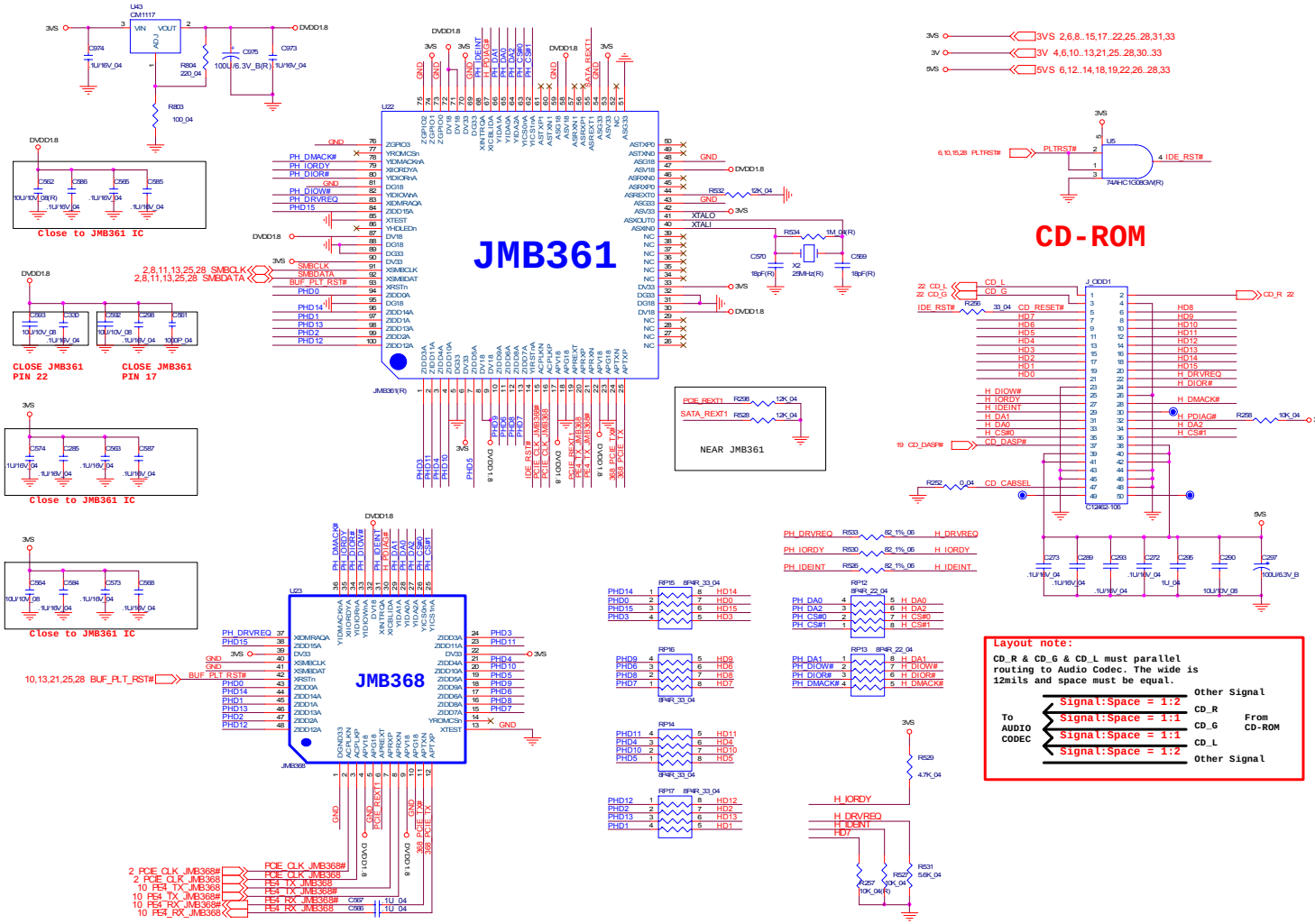

Sheet 24 of 40
JM368 PCIE to PATA

Mini Card & TV Out/ Video In

Sheet 25 of 40
Mini Card & TV Out/ Video In

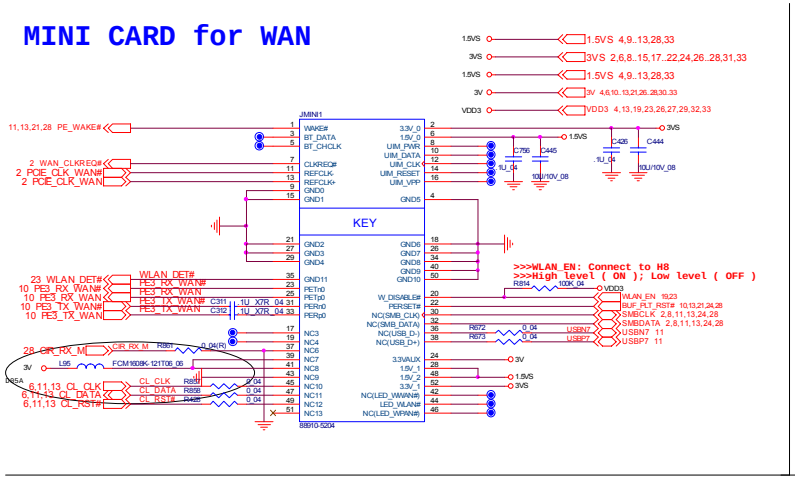

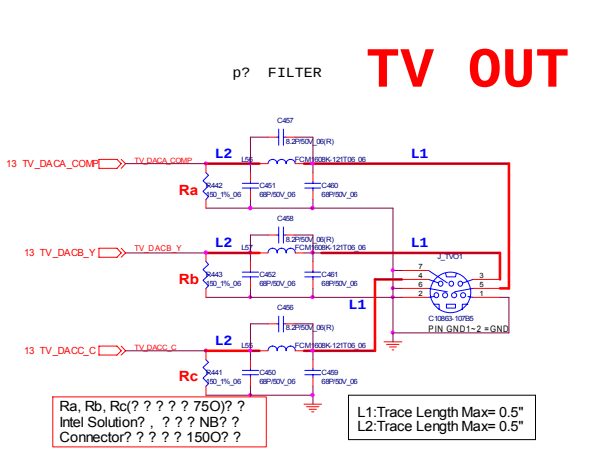

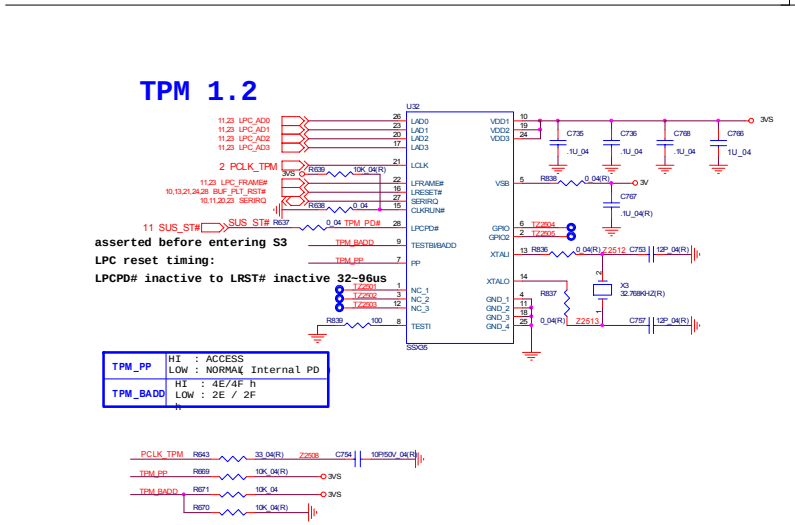

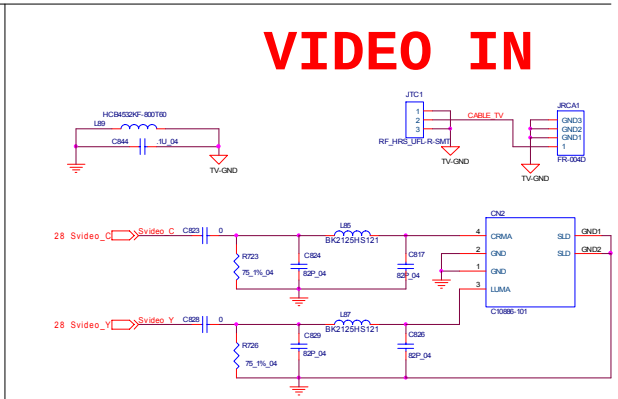

Daughter Connection

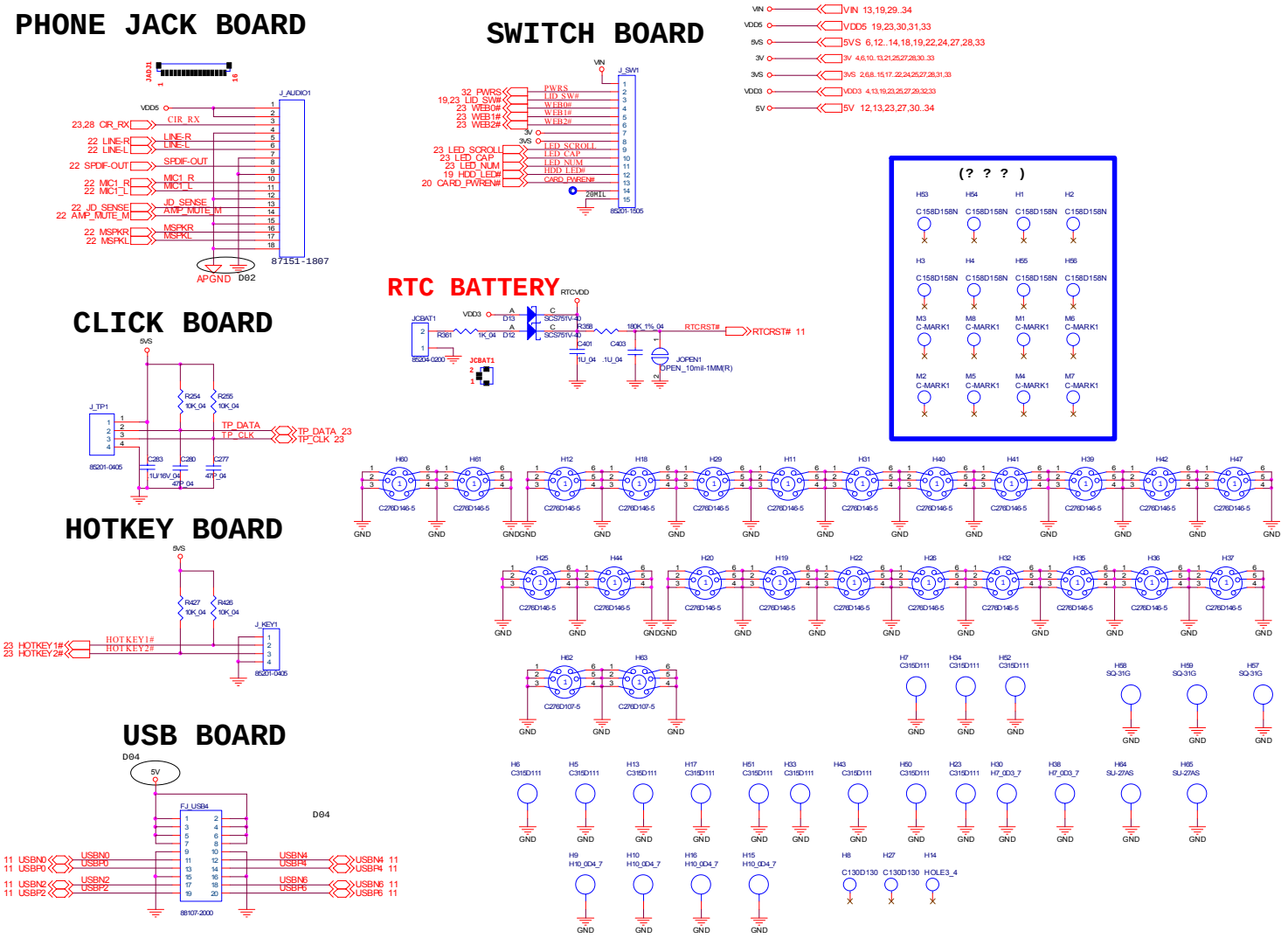

Sheet 26 of 40
Daughter
Connection

CCD/ BT/ FAN/ ROM

Sheet 27 of 40
CCD/ BT/ FAN/ ROM

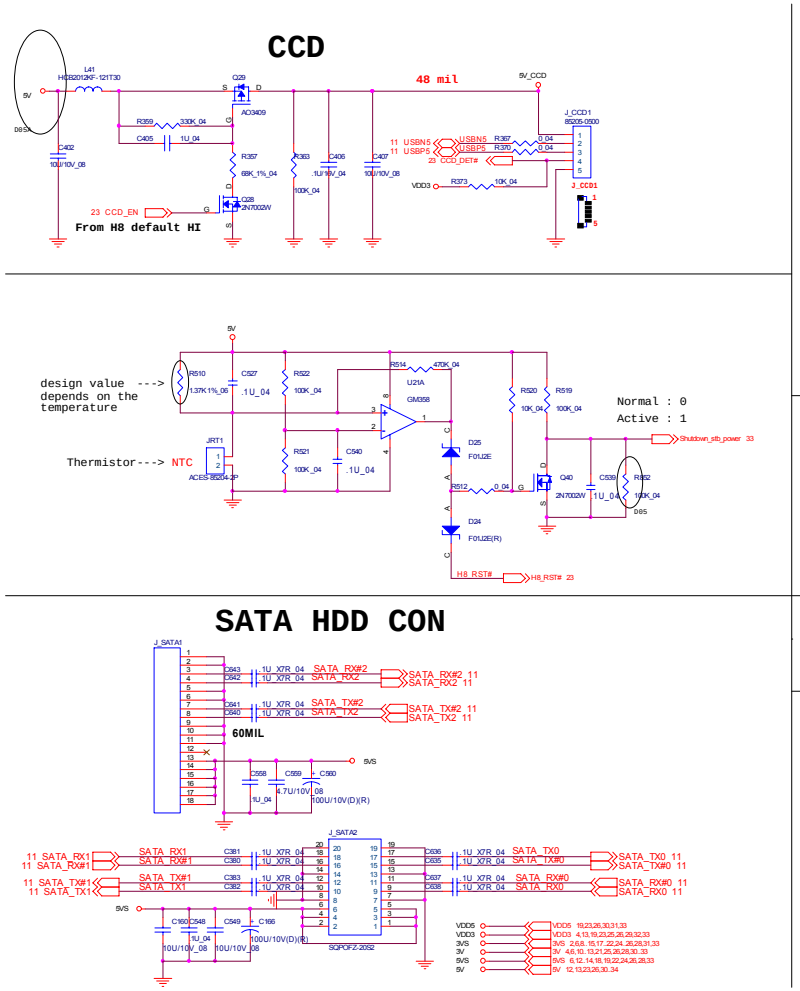

Mini PCI/ MDC/ New Card

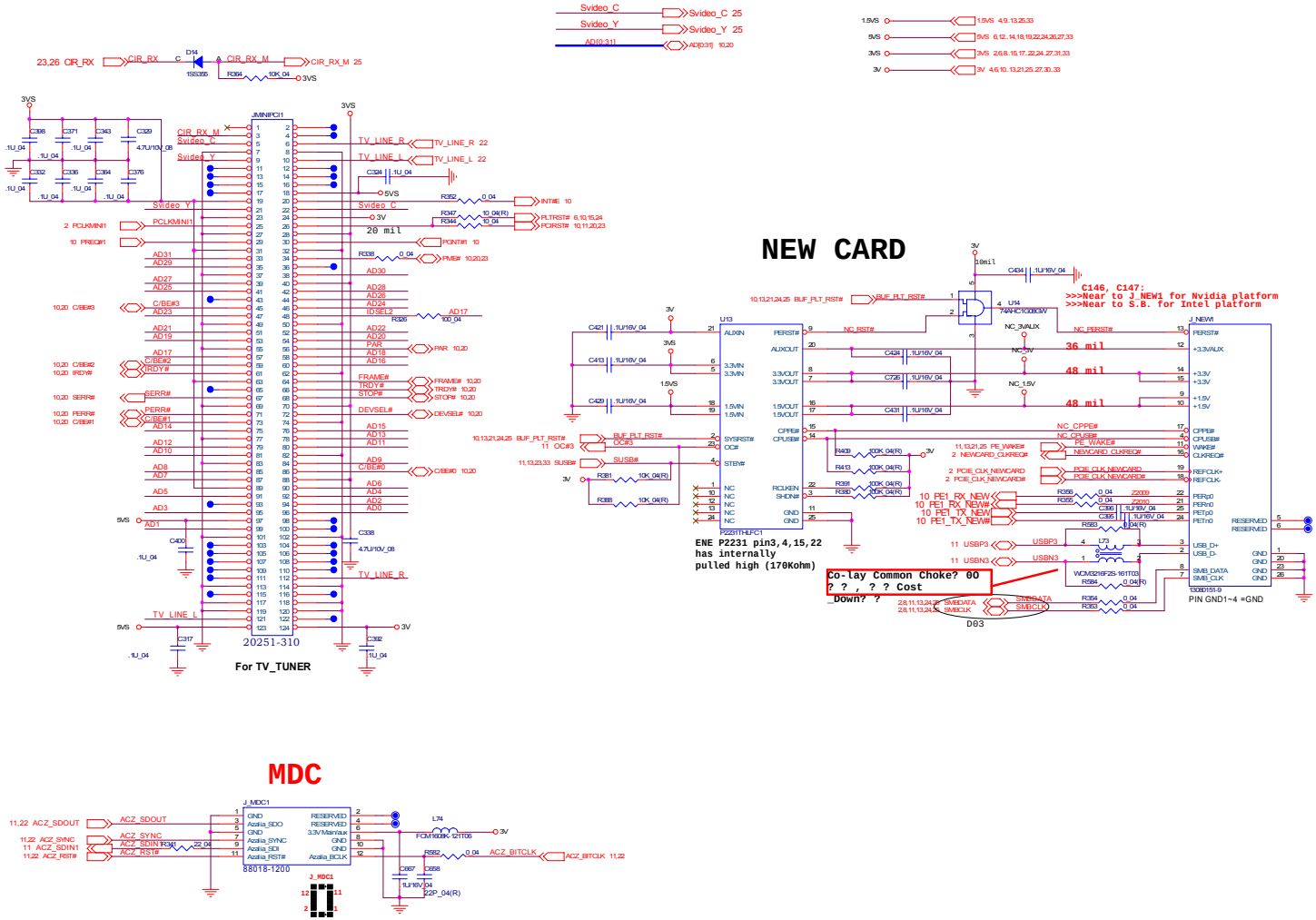

Sheet 28 of 40
Mini PCI/ MDC/
New Card

AC-In, Charger

Sheet 29 of 40
AC-In, Charger

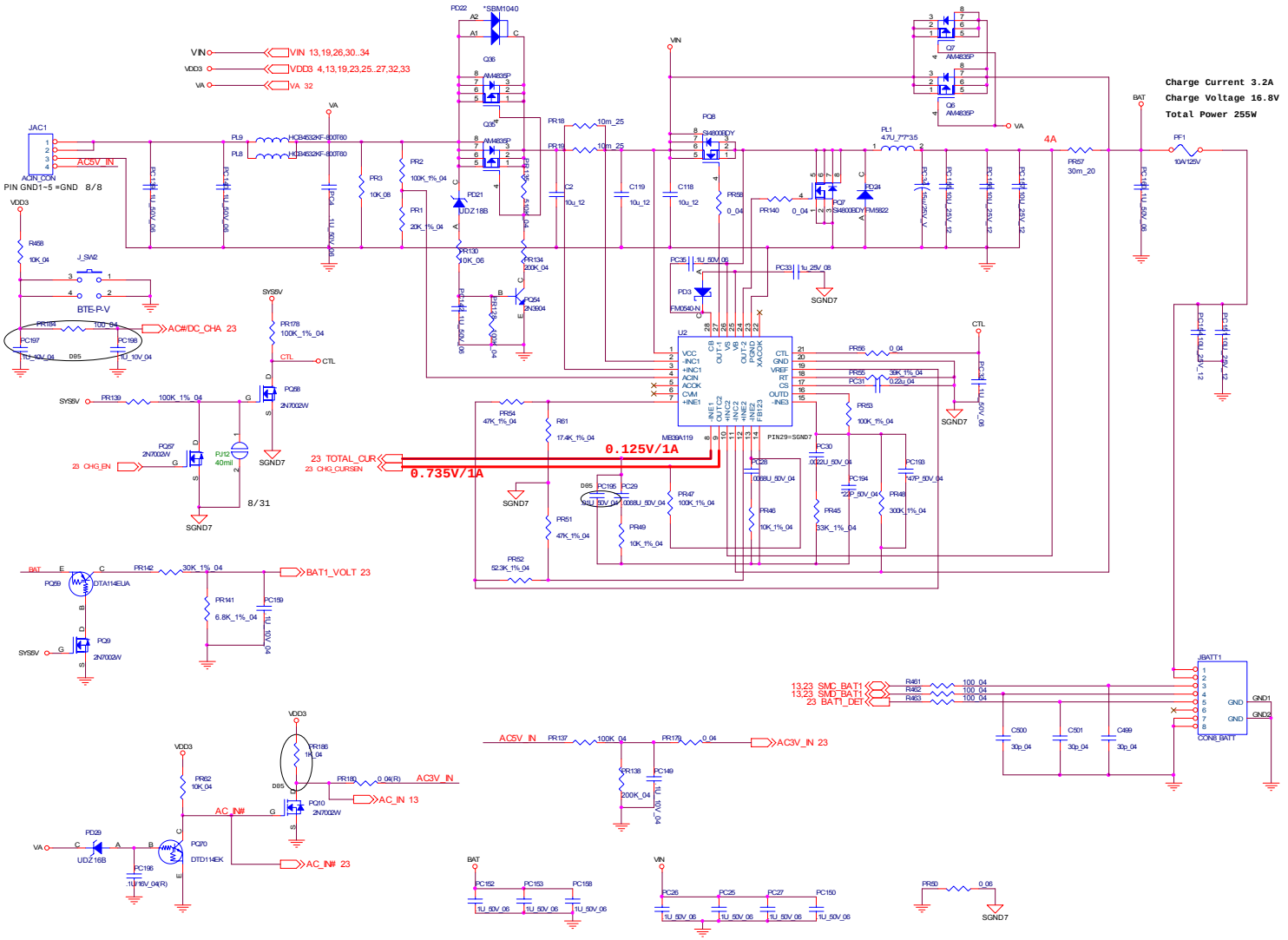

Power 1.2V/ 1.25V

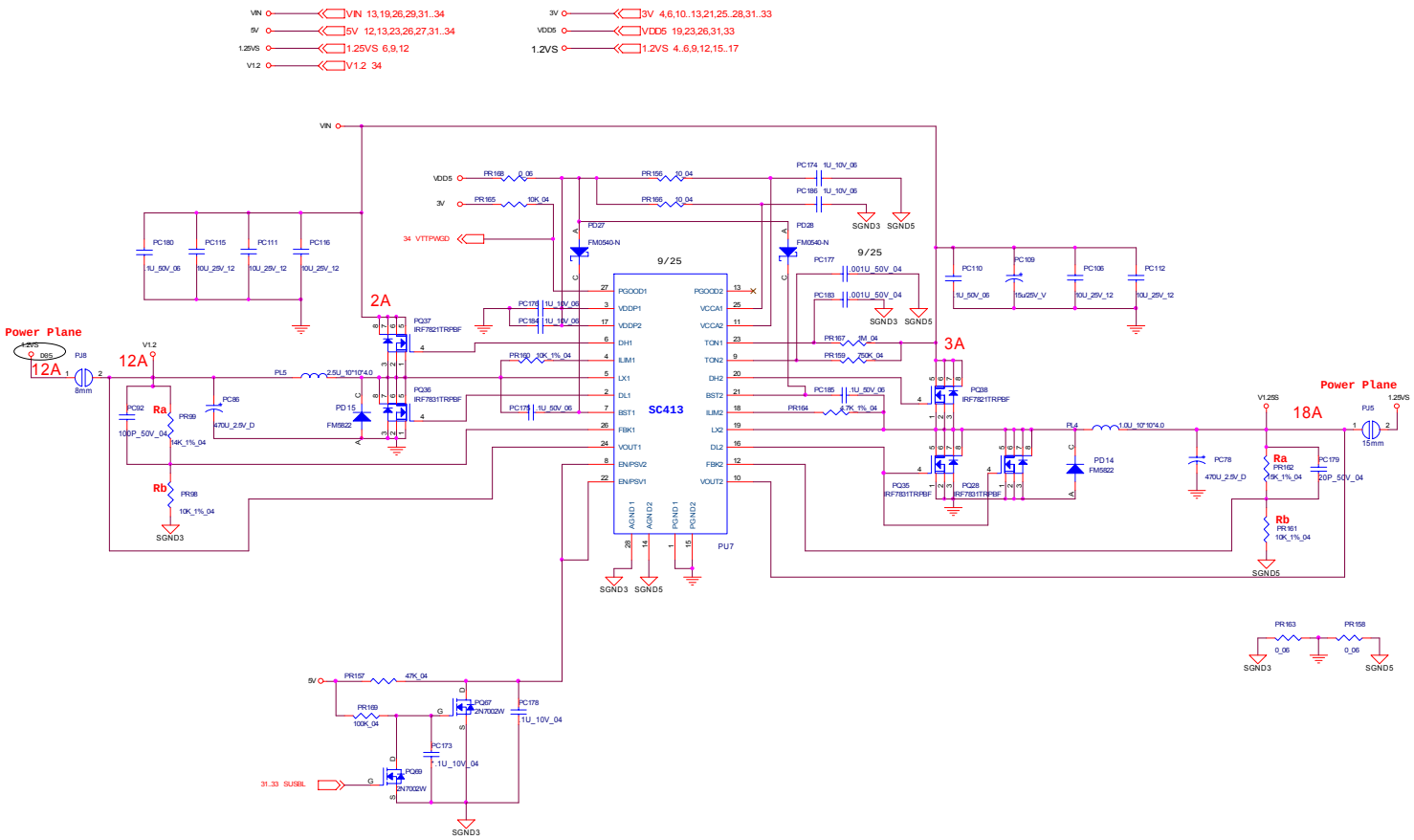

Sheet 30 of 40
Power 1.2V/ 1.25V

Power 1.5V/ 1.05V/ 2.5V

Sheet 31 of 40
Power 1.5V/ 1.05V/ 2.5V

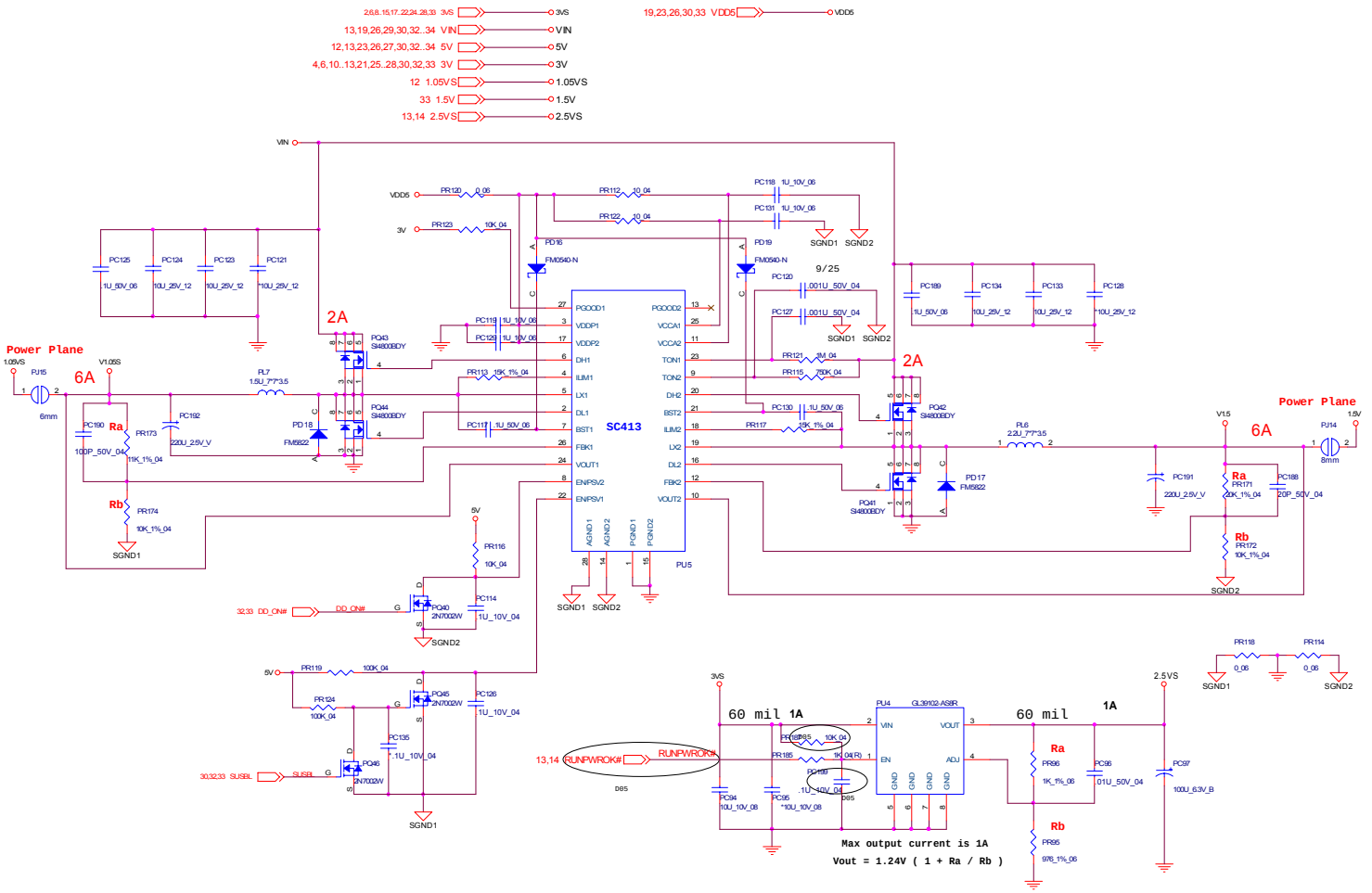

Power 1.8V/ 0.9V/ 12V

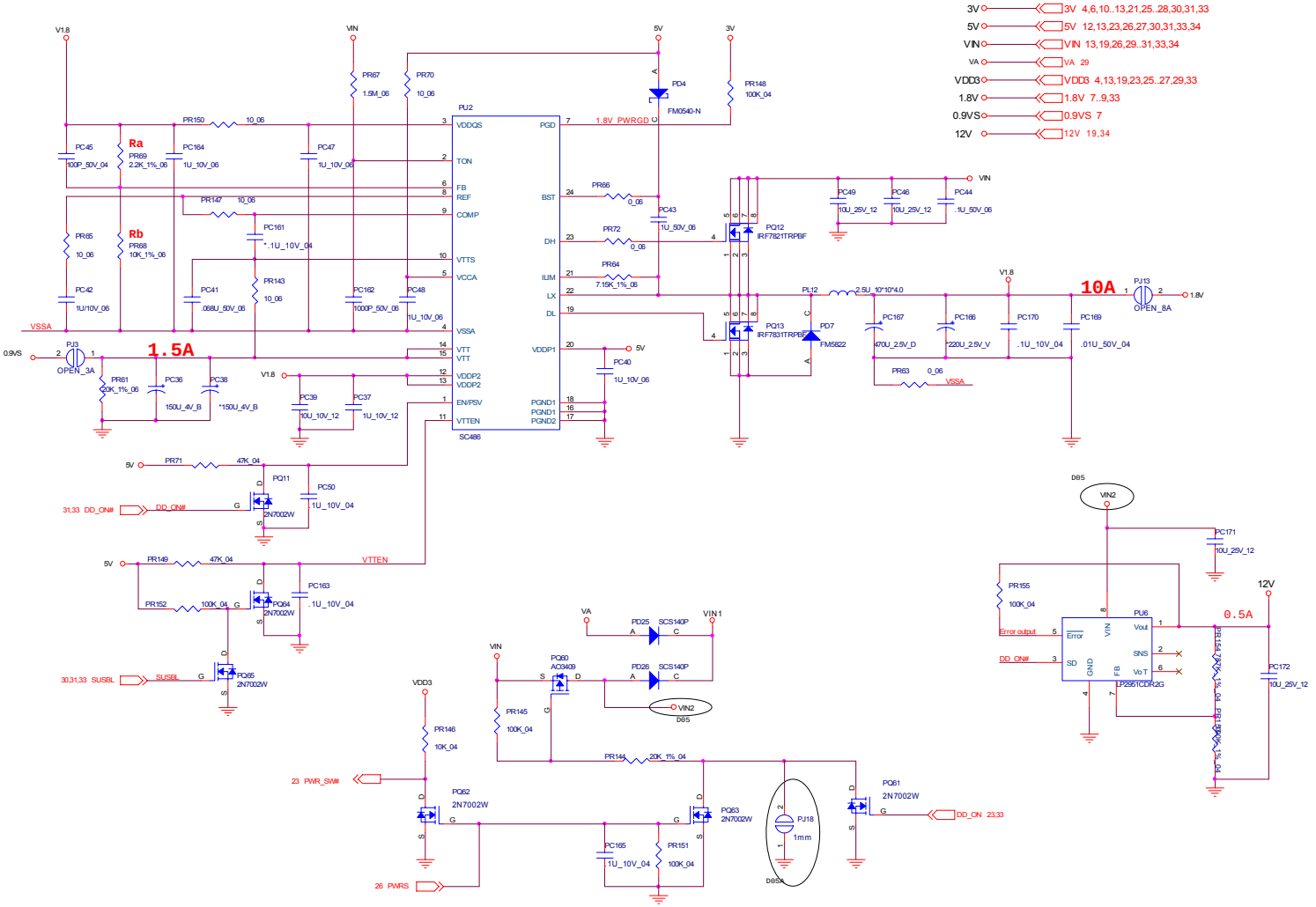

Sheet 32 of 40
Power 1.8V/ 0.9V/ 12V

Power 3.3V/ 5V

Sheet 33 of 40
Power 3.3V/ 5V

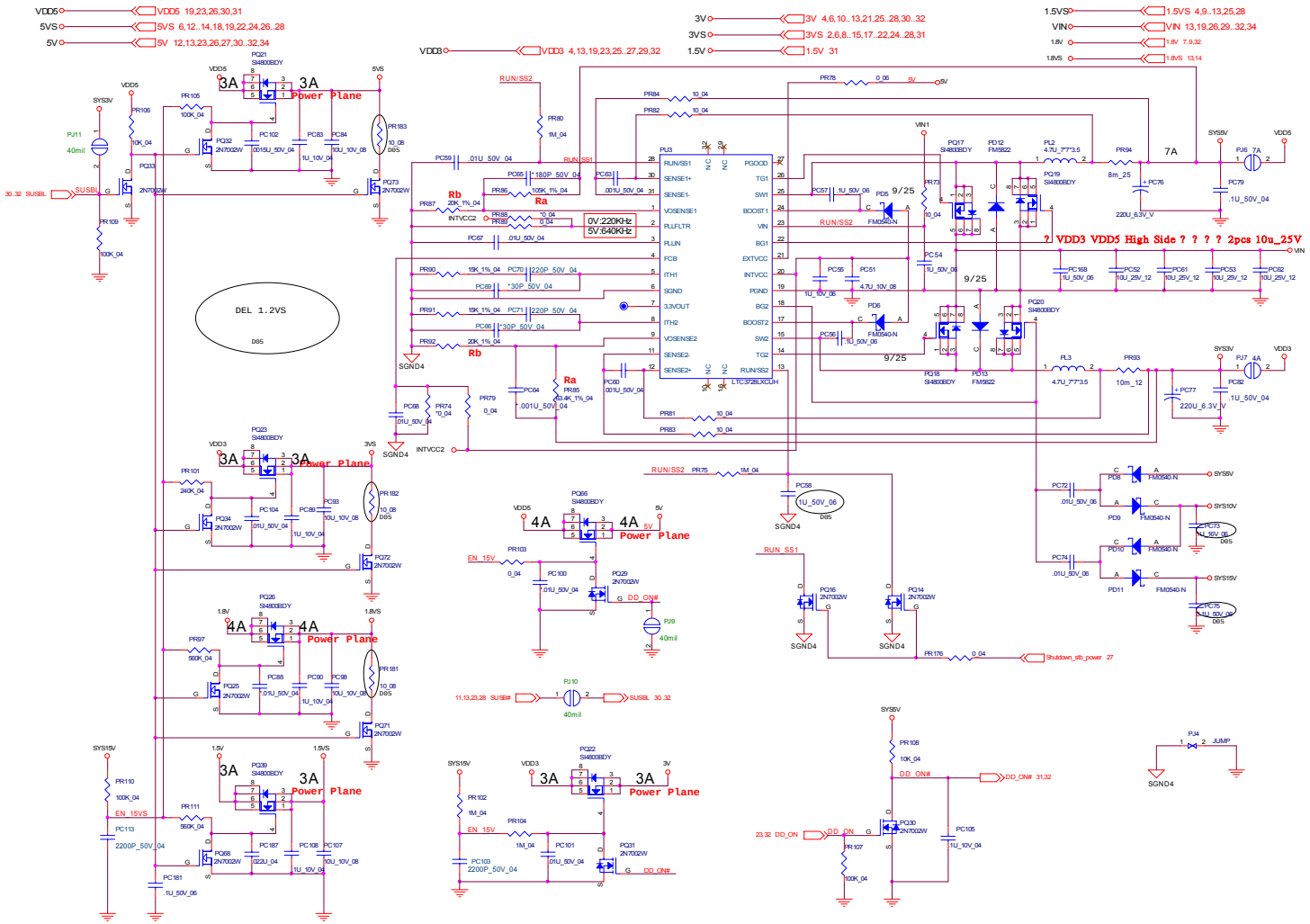

VCore Power

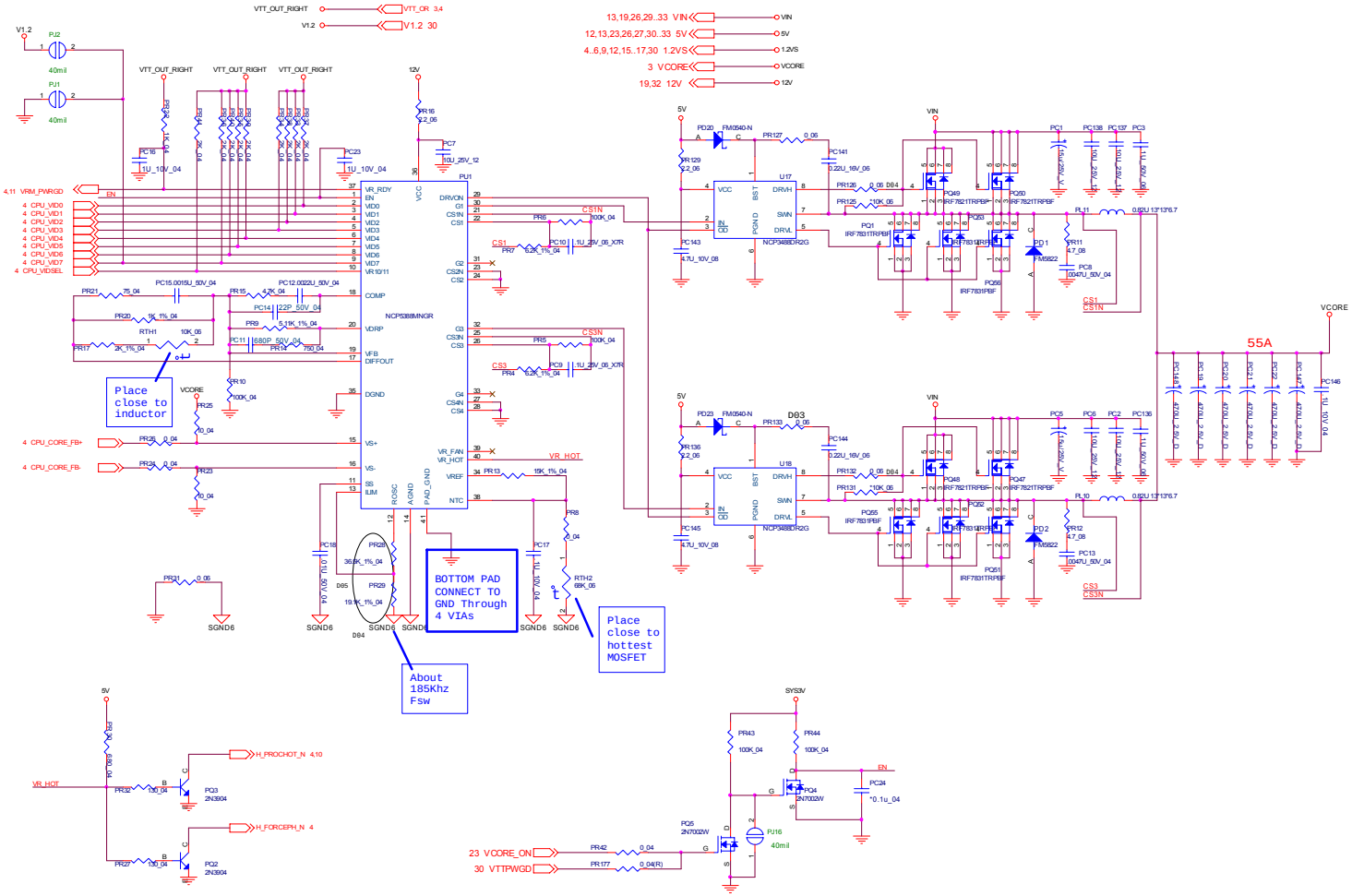

Sheet 34 of 40
VCore Power

Audio Board

Sheet 35 of 40
Audio Board

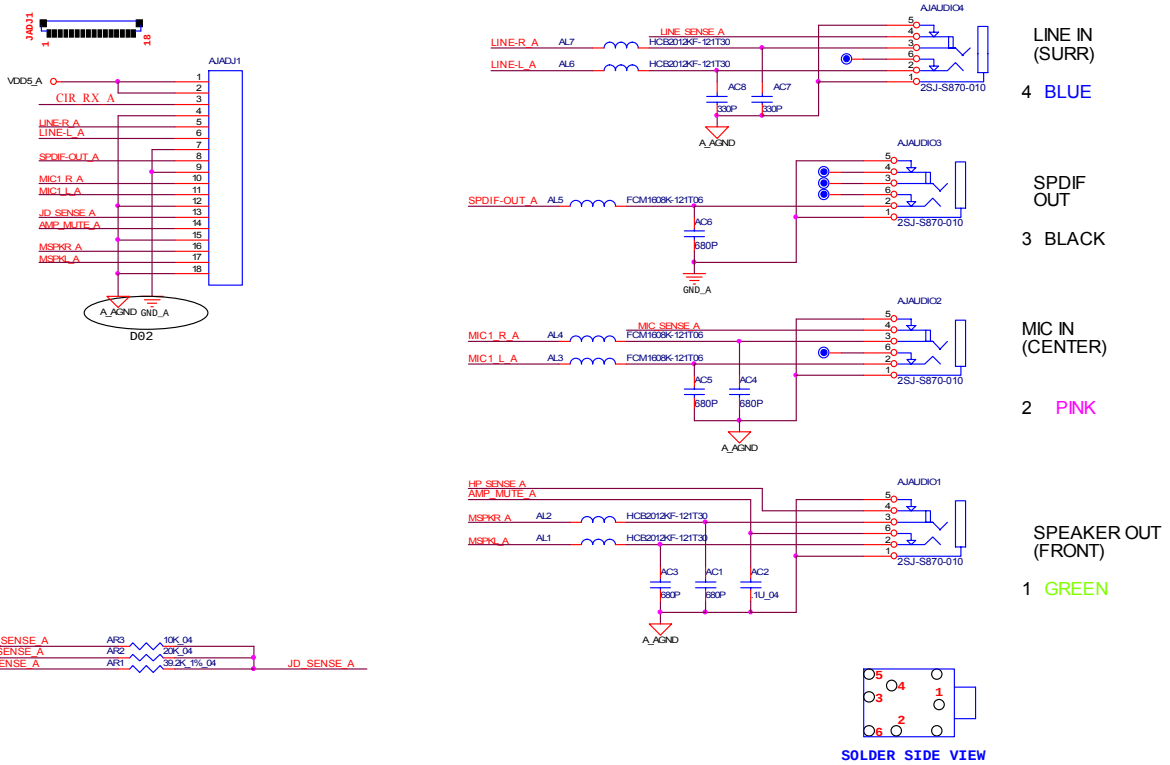

Card Reader Board

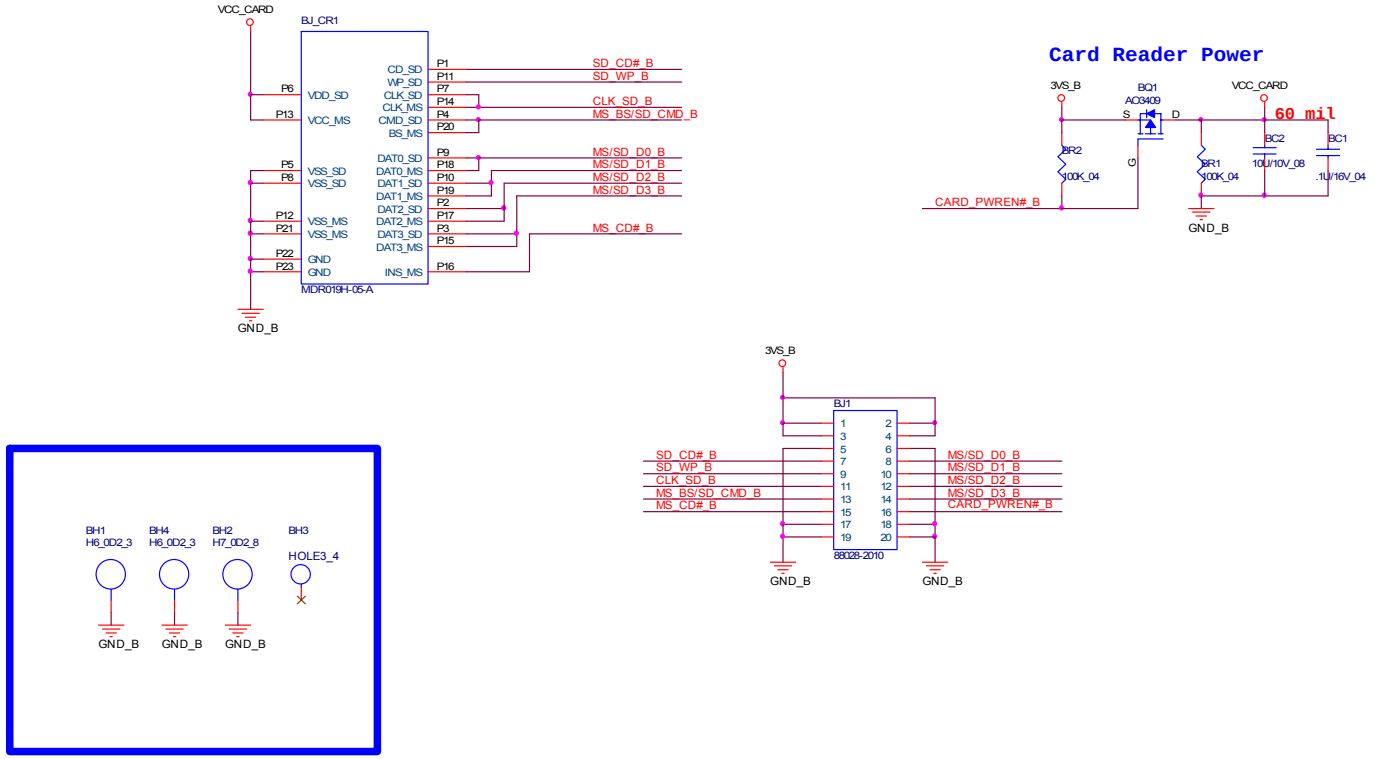

Sheet 36 of 40
Card Reader Board

Click Board

Sheet 37 of 40
Click Board

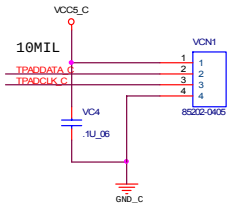

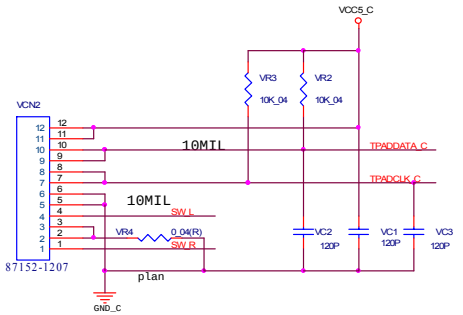

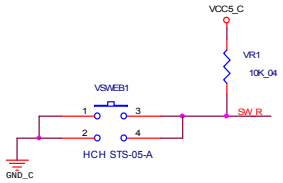

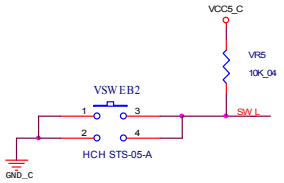

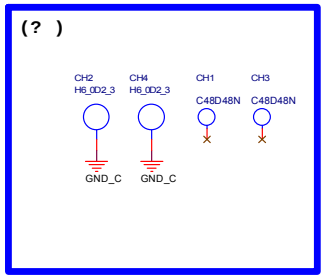

HotKey Board

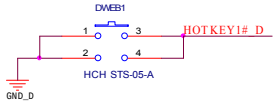

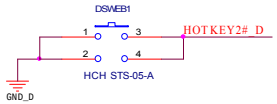

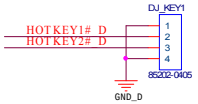

Sheet 38 of 40
HotKey Board

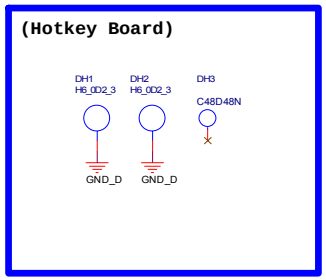

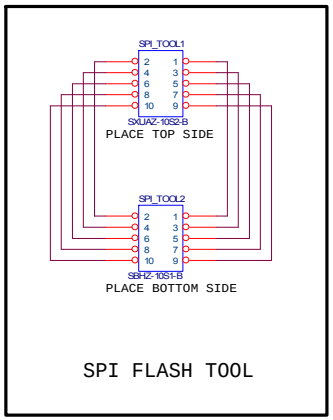

Switch Board

Sheet 39 of 40
Switch Board

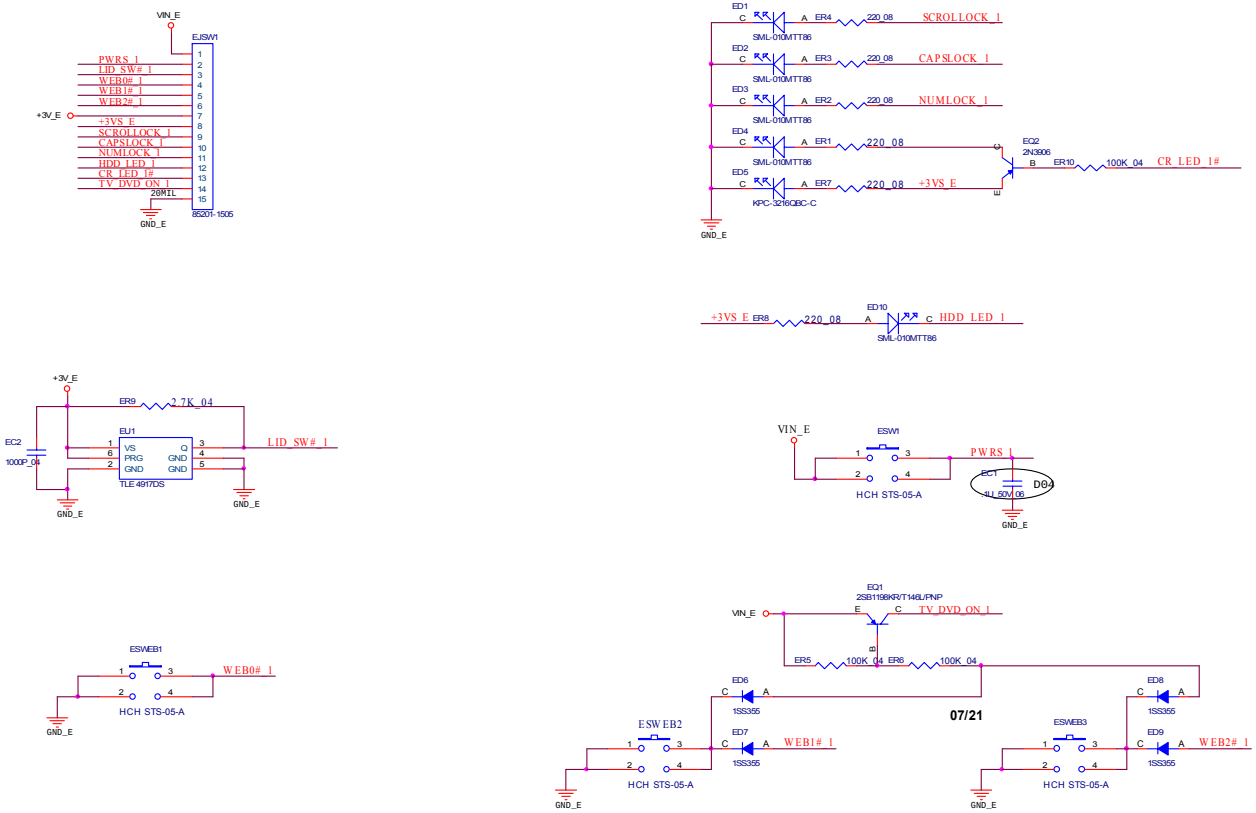

USB Board

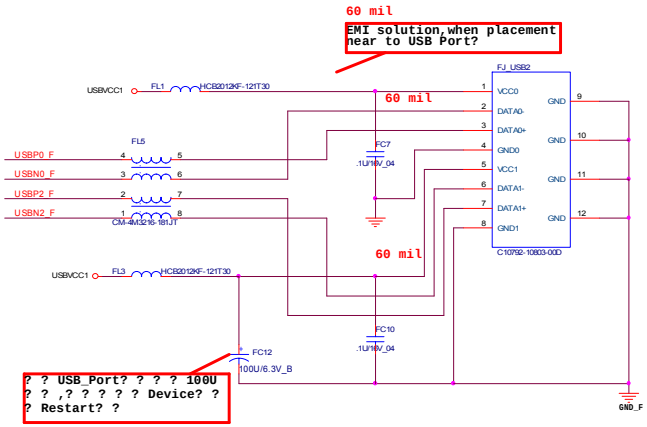

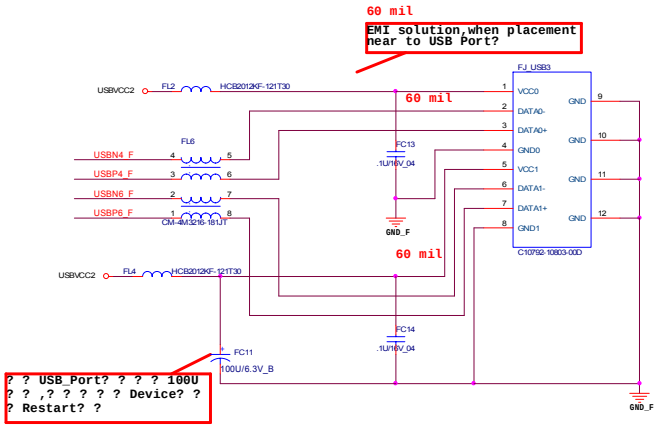

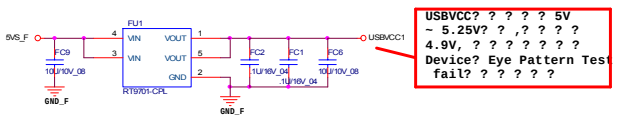

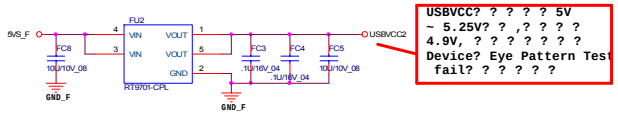

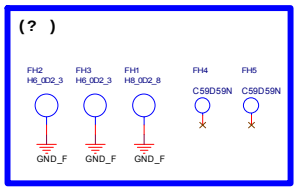

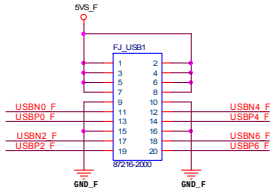

Sheet 40 of 40
USB Board