PART NUMBER	REFERENCE
C100X-XXX- 2X01 / 2X02	

LTR.	ECN	DESCRIPTION	DATE	APPD.
A	1745	ADD ROHS P/N	6/18/05	T.S.

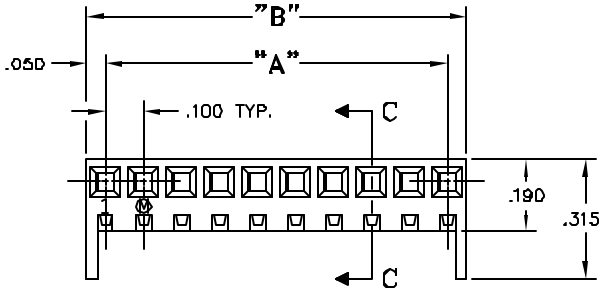

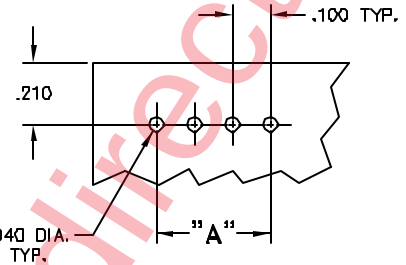

RECOMMENDED P.C. BOARD LAYOUT

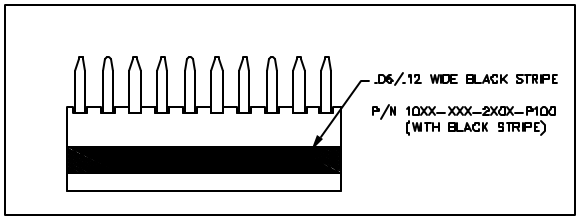

TABLE II	
PART No.	DIM."C"
100X-XXX-2X02	$.180^{+.020}_{-.010}$
100X-XXX-2X01	$.120^{+.020}_{-.010}$

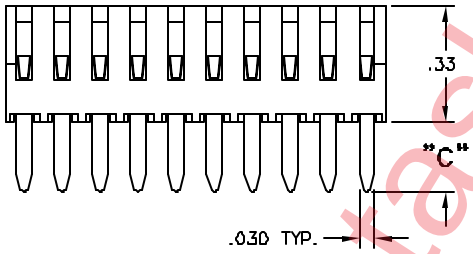

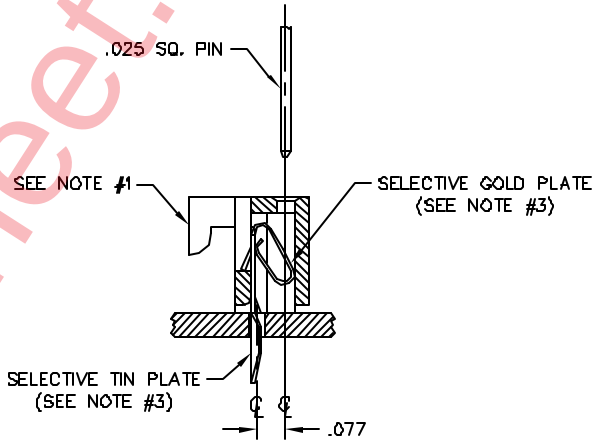

SECTION C-C

TABLE I			
PART No.	No. OF POS.	DIM "A"	DIM "B"
100X-X02-2X0X	2	.100±.010	.200±.015
X03	3	.200	.300
X04	4	.300	.400
X05	5	.400	.500
X06	6	.500	.600
X07	7	.600	.700
X08	8	.700	.800
X09	9	.800	.900
X10	10	.900	1.000
X11	11	1.000	1.100
X12	12	1.100	1.200
X13	13	1.200	1.300
X14	14	1.300	1.400
X15	15	1.400	1.500
X16	16	1.500	1.600
X17	17	1.600	1.700
X18	18	1.700	1.800
X19	19	1.800	1.900
X20	20	1.900	2.000
X21	21	2.000	2.100
X22	22	2.100	2.200
X23	23	2.200	2.300
X24	24	2.300	2.400
X25	25	2.400	2.500
X26	26	2.500	2.600
X27	27	2.600	2.700
100X-X28-2X0X	28	2.700±.010	2.800±.015

NOTES:

1) PART CAN BE SUPPLIED WITH HOOKS: P/N 100X-1XX-2X0XW
AND/OR WITHOUT HOOKS: P/N 100X-0XX-2X0XW.

2) INSULATOR MATERIAL: NYLON 6/6, U.L. 94V-0;
CONTACT MATERIAL: 100X-XXX-20XXW: PHOSPHOR BRONZE, ALLOY 510;
100X-XXX-21XXW: BRASS, ALLOY 260.

3) CONTACT FINISH: 100Q-XXX-2X0X: BRITE TIN PLATE (.0001/.0002) OVER COPPER UNDERPLATE (.0001 MIN.);
100Q-XXX-2X0XW: .000100/.000200 MATTE TIN OVER .000030/.000060 NICKEL. ROHS COMPLIANT
10D2-XXX-2X0X: GOLD PLATE (.000015) OVER NICKEL UNDERPLATE (.000050);
10D8-XXX-2X0X: SELECT GOLD PLATE (.000020 MIN.) AND SELECT TIN PLATE (.0002) WITH NICKEL UNDERPLATE (.000050) OVERALL;
100B-XXX-2X0XW: SELECT GOLD PLATE (.000020 MIN.) AND SELECT MATTE TIN PLATE (.0001/.0002) WITH NICKEL UNDERPLATE (.000050/.000150) OVERALL; ROHS COMPLIANT
100E-XXX-2X0X: 90/10 TIN/LEAD (.000150 MIN.) OVER NICKEL UNDERPLATE (.000050/.000150);
10DF-XXX-2X0X: SELECT GOLD PLATE (.000030 MIN.) AND SELECT TIN PLATE (.0002) WITH NICKEL UNDERPLATE (.000050) OVERALL.
100F-XXX-2X0XW: .000030 SELECTIVE GOLD IN CONTACT AREA .000050/.000150 NICKEL ALL OVER .0001/.0002 SELECTIVE MATTE TIN ON SOLDER TAIL ROHS COMPLIANT

PART NUMBER LEGEND

10XX-XXX-2X0X-PXXXW

- W = ROHS COMPLIANT; ASSEMBLY HAS A LEAD FREE PLATING AND WILL ACCOMMODATE "LEAD FREE" WAVE SOLDER PROCESSES
- 008 = TRAY PACKAGING REQUIRED; 100 = BLACK STRIPE REQUIRED
- CONTACT TAIL LENGTH. (SEE TABLE I)
- CONTACT MATERIAL (SEE NOTE 2)
- NUMBER OF POSITIONS (SEE TABLE I)
- INSULATOR STYLE: 0 = WITHOUT HOOKS; 1 = WITH HOOKS
- CONTACT PLATING (SEE NOTE 3)
- INSULATOR MATERIAL (SEE NOTE 2)

THE INFORMATION DISCLOSED IN THIS DOCUMENT IS PROPRIETARY TO METHODE ELECTRONICS, INC. AND MAY NOT BE USED FOR MANUFACTURE OR ANY OTHER PURPOSE WITHOUT WRITTEN CONSENT OF METHODE. DETAILS SUBJECT TO CHANGE WITHOUT NOTICE, AS THEY MAY EVOLVE WITH RESPECT TO PRODUCT IMPROVEMENTS.

METRIC ☐ INCHES ☒

TOLERANCE UNLESS OTHERWISE SPECIFIED
METRIC: ± .35mm, XX ± .13mm
INCHES: FRAC ± 1/64, DEC XX ± .01, XXX ± .005, ANGLES ± 1°

DRAWN BY: O.CABRERA	DATE: 3/9/00
CHECKED BY: T.SCHEITZ	3/9/00
ENGINEER: O.CABRERA	3/9/00
APPROVED BY: T.SCHEITZ	3/9/00

ITEM	QTY.	PART NO.	DESCRIPTION	ENG. SIZE
MATERIAL		SEE NOTE #2		
FINISH		SEE NOTE #3		

METHODE ELECTRONICS, INC.
INTERCONNECT PRODUCTS DIV.

TITLE: .100 CENTER DIP SOLDER VERTICAL MOUNT CONNECTOR

SIZE	CODE IDENT.	PART NUMBER	REV.
C	95354	C100X-XXX- 2X01 / 2X02	A

SCALE 4X SHT. 1 OF 1

www.datasheet.directo