V Series

RoHS Compliant

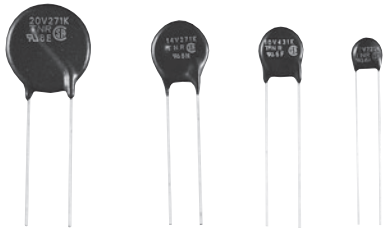

◆FEATURES

- ●Large surge capability (the surge current ratings of TNR V series, by 8/20 μs, are about two times larger than TNR G series).
- ●Large energy capability (1.5 time larger than TNR G series).
- ●One rank smaller TNR V has same peak current as TNR G.
- ●Excellent voltage non-linear coefficient.
  Low clamping voltage.
- ●Symmetrical V-I characteristics (No polarity).
- ●Fast response.
- ●Stable characteristics against repeated surges.
- ●Superior temperature characteristics.
- ●High reliability
- ●UL, CSA and VDE recognized components
  UL 1449 3rd File : E323623
  UL 1414 File : E65426 (Except "12V")
  CSA File : LR97864
  VDE File : 118623

◆APPLICATIONS

- ●Protection for semiconductors from over voltage.
- ●Protection for electronic instruments from lightning surges.
- ●Absorption of on-off surges from motors and relays.

Operating Temperature Range: -40 to +85℃
Storage Temperature Range: -50 to +125℃

Datasheet.Directory

◆PART NUMBERING SYSTEM

1 2 3 4 5 6 7 8 9 10 11 12 13 14 15 16 17 18
T N D □ □ V – □ □ □ K B □ □ □ □ □ □

- Design Code
- Lead Forming / Taping
- Packing Style⑦
- Varistor Volt. Tolerance⑥
- Varistor Voltage⑤
- Series④
- Element Diameter③
- Product Form②
- Category①

①Category	
T	Metal Oxide Varistors TNR

②Product Form	
ND	Disk Type

③Element Diameter	
05	φ 5 mm
07	φ 7 mm
09	φ 9 mm
10	φ10 mm
12	φ12 mm
14	φ14 mm
20	φ20 mm

④Series	
V–	V Series

⑤Varistor Voltage
The first two digits are significant figures and the third one denotes the number of following zeros.

⑥Varistor Volt. Tolerance	
K	±10%

⑦Packing Style	
B	Bulk
T	Taping

Product specifications in this catalog are subject to change without notice.Request our product specifications before purchase and/or use. Please use our products based on the information contained in this catalog and product specifications.

V Series

◆STANDARD RATINGS (Type 5V)

Part Number	Previous Part Number (Just for your reference)	Maximum Ratings: Max. Allowable Voltage AC (Vrms)	Max. Allowable Voltage DC (V)	Max. Peak Current 8/20μs(A)	Max. Energy 2ms(J)	Rated Wattage (W)	Max. Clamping Voltage (A)	Max. Clamping Voltage (V)	Capacitance Typical @1kHz (pF)	Varistor Voltage V0.1mA (V)	T Max. (mm)
TND05V-180KB00AAA0	TNR5V180K	11	14	250A/1 time 125A/2 times	0.4	0.01	1	40	2540	18 (16～ 20)	4.5
TND05V-220KB00AAA0	TNR5V220K	14	18		0.5			48	2090	22 (20～ 24)	
TND05V-270KB00AAA0	TNR5V270K	17	22		0.7			60	1790	27 (24～ 30)	
TND05V-330KB00AAA0	TNR5V330K	20	26		0.8			73	1480	33 (30～ 36)	
TND05V-390KB00AAA0	TNR5V390K	25	30		0.9			86	1310	39 (35～ 43)	
TND05V-470KB00AAA0	TNR5V470K	30	37		1.1			104	1140	47 (42～ 52)	
TND05V-560KB00AAA0	TNR5V560K	35	44		1.3			123	1000	56 (50～ 62)	
TND05V-680KB00AAA0	TNR5V680K	40	55		1.6			150	870	68 (61～ 75)	
TND05V-820KB00AAA0	TNR5V820K	50	65	800A/1 time 600A/2 times	2.5	0.1	5	145	400	82 (74～ 90)	4.1
TND05V-101KB00AAA0	TNR5V101K	60	85		3			175	350	100 (90～110)	4.3
TND05V-121KB00AAA0	TNR5V121K	75	100		3.5			210	310	120 (108～132)	4.5
TND05V-151KB00AAA0	TNR5V151K	95	125		4.5			260	270	150 (135～165)	4.8
TND05V-181KB00AAA0	TNR5V181K	110	145		5			325	190	180 (162～198)	4.3
TND05V-201KB00AAA0	TNR5V201K	130	170		6			355	110	200 (185～225)	4.4
TND05V-221KB00AAA0	TNR5V221K	140	180		6.5			380	110	220 (198～242)	4.5
TND05V-241KB00AAA0	TNR5V241K	150	200		7.5			415	100	240 (216～264)	4.6
TND05V-271KB00AAA0	TNR5V271K	175	225		8			475	90	270 (247～303)	4.8
TND05V-331KB00AAA0	TNR5V331K	210	270		9.5			570	80	330 (297～363)	5.1
TND05V-361KB00AAA0	TNR5V361K	230	300		11			620	80	360 (324～396)	5.3
TND05V-391KB00AAA0	TNR5V391K	250	320		12			675	70	390 (351～429)	5.4
TND05V-431KB00AAA0	TNR5V431K	275	350		13.5			745	70	430 (387～473)	5.6
TND05V-471KB00AAA0	TNR5V471K	300	385		15			810	60	470 (423～517)	5.8

◆DIMENSIONS [mm]

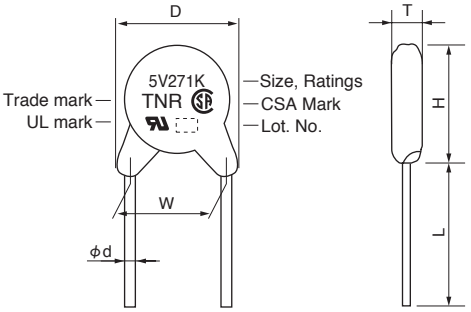

D Max.	H Max.	T Max.	L Min.	ϕd ±0.05	W ±1.0
7.5	10.0	Ref. to RATINGS	20.0	0.6	5.0

◆V-I CURVE

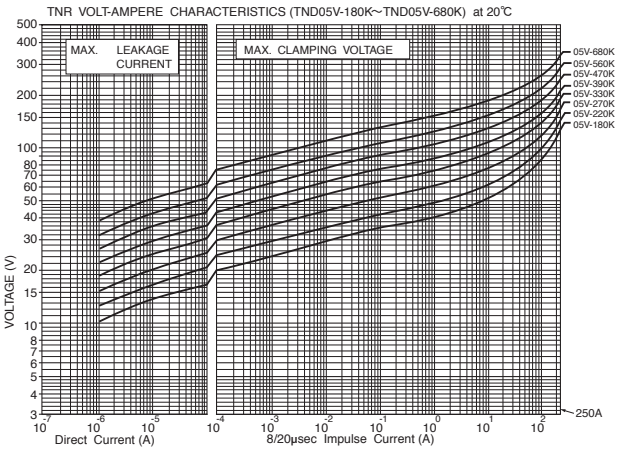

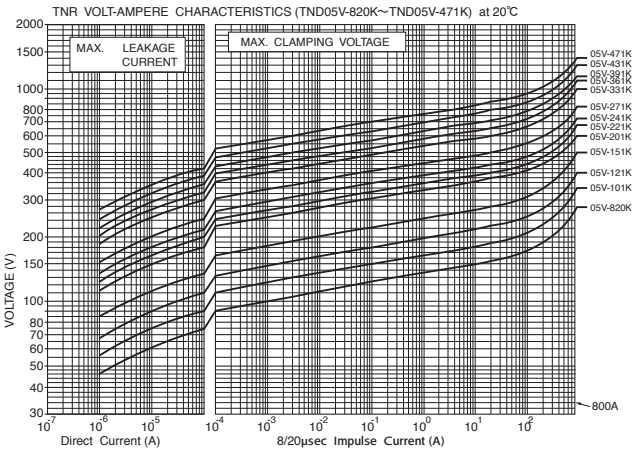

Product specifications in this catalog are subject to change without notice.Request our product specifications before purchase and/or use. Please use our products based on the information contained in this catalog and product specifications.

V Series

◆STANDARD RATINGS (Type 7V)

Part Number	Previous Part Number (Just for your reference)	Maximum Ratings: Max. Allowable Voltage AC (Vrms)	Max. Allowable Voltage DC (V)	Max. Peak Current 8/20μs(A)	Max. Energy 2ms(J)	Rated Wattage (W)	Max. Clamping Voltage (A)	Max. Clamping Voltage (V)	Capacitance Typical @1kHz (pF)	Varistor Voltage V1mA (V)	T Max. (mm)
TND07V-150KB00AAA0	TNR7V150K	8	12		0.7			30	4600	15 (13～ 17)	4.5
TND07V-180KB00AAA0	TNR7V180K	11	14		0.9			36	3800	18 (16～ 20)	4.5
TND07V-220KB00AAA0	TNR7V220K	14	18		1.1			43	3200	22 (20～ 24)	4.6
TND07V-270KB00AAA0	TNR7V270K	17	22	500A/1 time	1.3			53	2800	27 (24～ 30)	4.7
TND07V-330KB00AAA0	TNR7V330K	20	26		1.6	0.02	2.5	65	2300	33 (30～ 36)	4.9
TND07V-390KB00AAA0	TNR7V390K	25	30	250A/2 times	1.9			77	2100	39 (35～ 43)	4.8
TND07V-470KB00AAA0	TNR7V470K	30	37		2.3			93	1900	47 (42～ 52)	4.9
TND07V-560KB00AAA0	TNR7V560K	35	44		2.7			110	1700	56 (50～ 62)	5.0
TND07V-680KB00AAA0	TNR7V680K	40	55		3.3			135	1500	68 (61～ 75)	5.2
TND07V-820KB00AAA0	TNR7V820K	50	65		5			135	800	82 (74～ 90)	4.1
TND07V-101KB00AAA0	TNR7V101K	60	85		6			165	700	100 (90～110)	4.3
TND07V-121KB00AAA0	TNR7V121K	75	100		7			200	650	120 (108～132)	4.5
TND07V-151KB00AAA0	TNR7V151K	95	125		9			250	600	150 (135～165)	4.8
TND07V-181KB00AAA0	TNR7V181K	110	145		11			300	430	180 (162～198)	4.3
TND07V-201KB00AAA0	TNR7V201K	130	170		12.5			340	250	200 (185～225)	4.4
TND07V-221KB00AAA0	TNR7V221K	140	180	1750A/1 time	13.5			360	230	220 (198～242)	4.5
TND07V-241KB00AAA0	TNR7V241K	150	200		15	0.25	10	395	210	240 (216～264)	4.6
TND07V-271KB00AAA0	TNR7V271K	175	225	1250A/2 times	17			455	190	270 (247～303)	4.8
TND07V-331KB00AAA0	TNR7V331K	210	270		20			545	160	330 (297～363)	5.1
TND07V-361KB00AAA0	TNR7V361K	230	300		23			595	150	360 (324～396)	5.3
TND07V-391KB00AAA0	TNR7V391K	250	320		25			650	140	390 (351～429)	5.4
TND07V-431KB00AAA0	TNR7V431K	275	350		27.5			710	130	430 (387～473)	5.6
TND07V-471KB00AAA0	TNR7V471K	300	385		30			775	120	470 (423～517)	5.8
TND07V-511KB00AAA0	TNR7V511K	320	410		32			845	110	510 (459～561)	6.0

◆DIMENSIONS [mm]

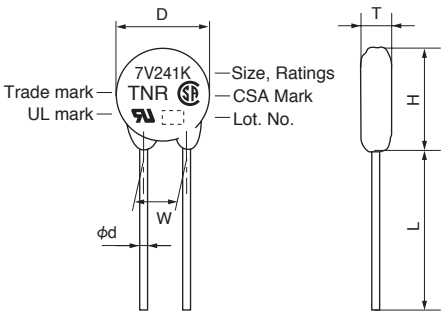

D Max.	H Max.	T Max.	L Min.	ϕd ±0.05	W ±1.0
8.5	11.5	Ref. to RATINGS	20.0	0.6	5.0

Product specifications in this catalog are subject to change without notice.Request our product specifications before purchase and/or use. Please use our products based on the information contained in this catalog and product specifications.

V Series

◆V-I CURVE (Type 7V)

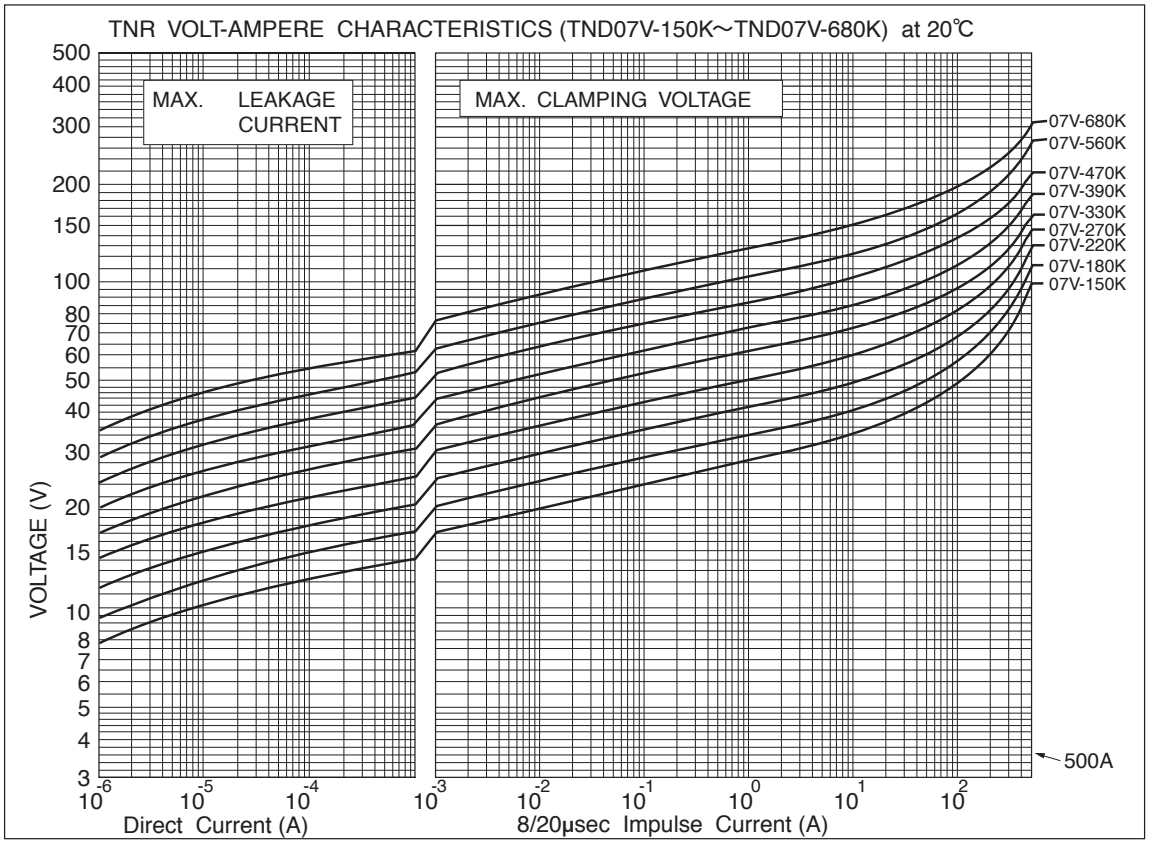

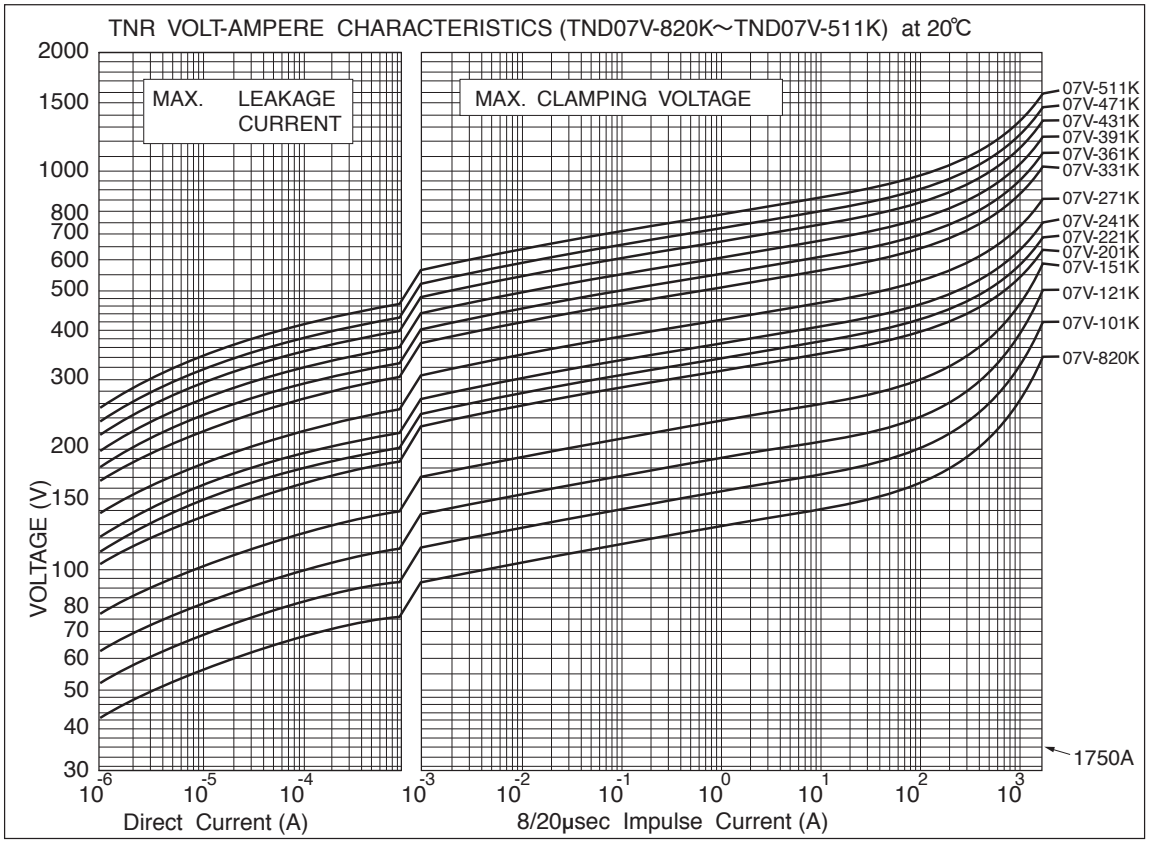

Product specifications in this catalog are subject to change without notice.Request our product specifications before purchase and/or use. Please use our products based on the information contained in this catalog and product specifications.

V Series

◆RATINGS (Type 9V)

Part Number	Previous Part Number (Just for your reference)	Maximum Ratings: Max. Allowable Voltage AC (Vrms)	Max. Allowable Voltage DC (V)	Max. Peak Current 8/20μs(A)	Max. Energy 2ms(J)	Rated Wattage (W)	Max. Clamping Voltage (A)	Max. Clamping Voltage (V)	Capacitance Typical @1kHz (pF)	Varistor Voltage V1mA (V)	T Max. (mm)
TND09V-150KB00AAA0	TNR9V150K	8	12		2.0			30	9600	15 (13～ 17)	3.8
TND09V-180KB00AAA0	TNR9V180K	11	14		2.2			36	8000	18 (16～ 20)	3.8
TND09V-220KB00AAA0	TNR9V220K	14	18		2.6			43	7000	22 (20～ 24)	4.0
TND09V-270KB00AAA0	TNR9V270K	17	22	800A/1 time	3.2			53	6000	27 (24～ 30)	4.2
TND09V-330KB00AAA0	TNR9V330K	20	26		4.0	0.02	5	65	5000	33 (30～ 36)	4.5
TND09V-390KB00AAA0	TNR9V390K	25	30	400A/2 times	4.7			77	4500	39 (35～ 43)	4.0
TND09V-470KB00AAA0	TNR9V470K	30	37		5.6			93	4000	47 (42～ 52)	4.2
TND09V-560KB00AAA0	TNR9V560K	35	44		6.7			110	3500	56 (50～ 62)	4.4
TND09V-680KB00AAA0	TNR9V680K	40	55		8.2			135	3200	68 (61～ 75)	4.5
TND09V-820KB00AAA0	TNR9V820K	50	65		10			135	1700	82 (74～ 90)	3.8
TND09V-101KB00AAA0	TNR9V101K	60	85		12			165	1600	100 (90～110)	3.9
TND09V-121KB00AAA0	TNR9V121K	75	100		14.5			200	1400	120 (108～132)	4.1
TND09V-151KB00AAA0	TNR9V151K	95	125		18			250	1300	150 (135～165)	4.4
TND09V-181KB00AAA0	TNR9V181K	110	145		22			300	900	180 (162～198)	4.0
TND09V-201KB00AAA0	TNR9V201K	130	170		25			340	500	200 (185～225)	4.1
TND09V-221KB00AAA0	TNR9V221K	140	180	3000A/1 time	27.5			360	450	220 (198～242)	4.2
TND09V-241KB00AAA0	TNR9V241K	150	200		30	0.25	25	395	400	240 (216～264)	4.3
TND09V-271KB00AAA0	TNR9V271K	175	225	2000A/2 times	35			455	350	270 (247～303)	4.5
TND09V-331KB00AAA0	TNR9V331K	210	270		42			545	300	330 (297～363)	4.8
TND09V-361KB00AAA0	TNR9V361K	230	300		45			595	280	360 (324～396)	5.0
TND09V-391KB00AAA0	TNR9V391K	250	320		50			650	260	390 (351～429)	5.1
TND09V-431KB00AAA0	TNR9V431K	275	350		55			710	240	430 (387～473)	5.3
TND09V-471KB00AAA0	TNR9V471K	300	385		60			775	220	470 (423～517)	5.6
TND09V-511KB00AAA0	TNR9V511K	320	410		67			845	210	510 (459～561)	5.8

◆DIMENSIONS [mm]

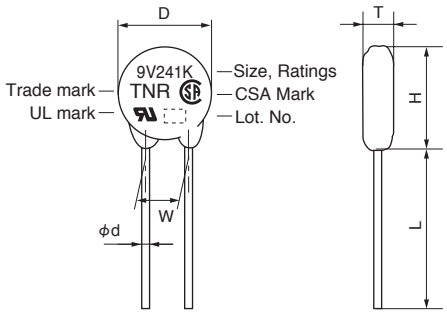

D Max.	H Max.	T Max.	L Min.	ϕd ±0.05	W ±1.0
11.5	14.5	Ref. to RATINGS	20.0	0.6	5.0

Product specifications in this catalog are subject to change without notice.Request our product specifications before purchase and/or use. Please use our products based on the information contained in this catalog and product specifications.

V Series

◆V-I CURVE (Type 9V)

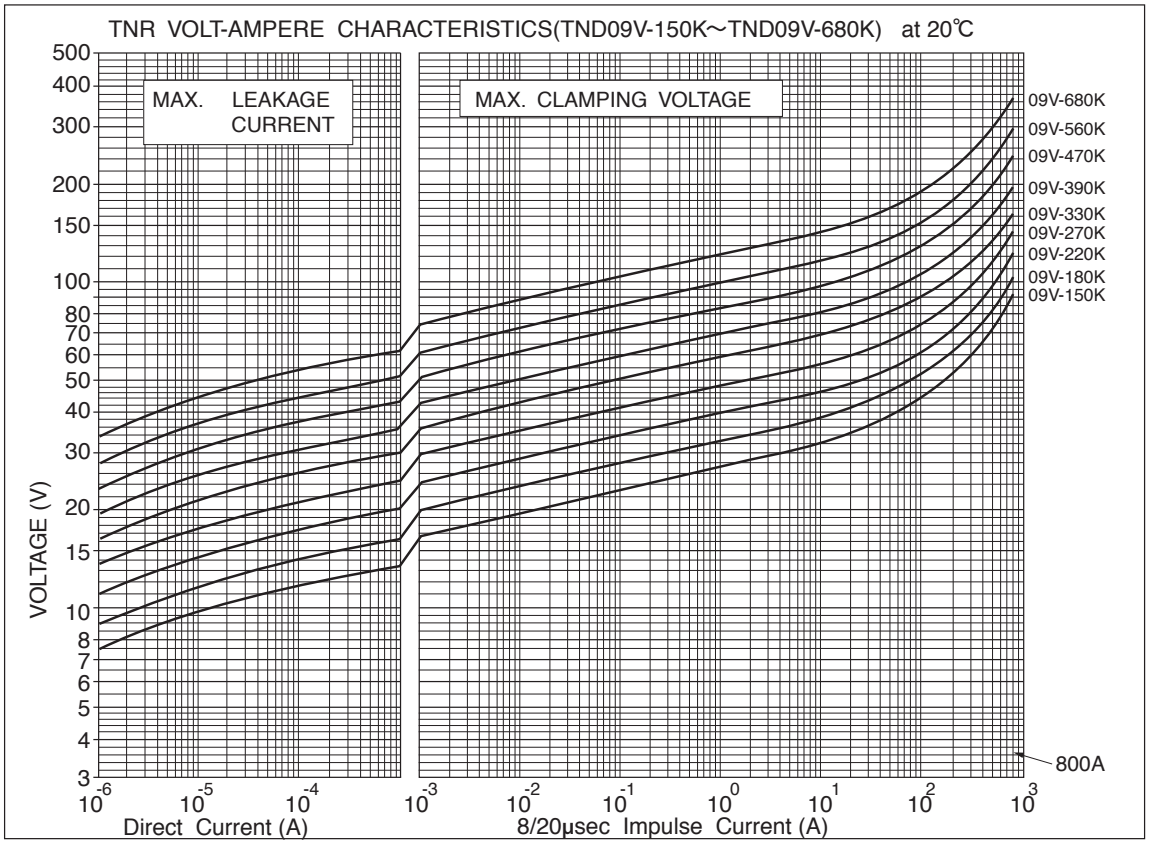

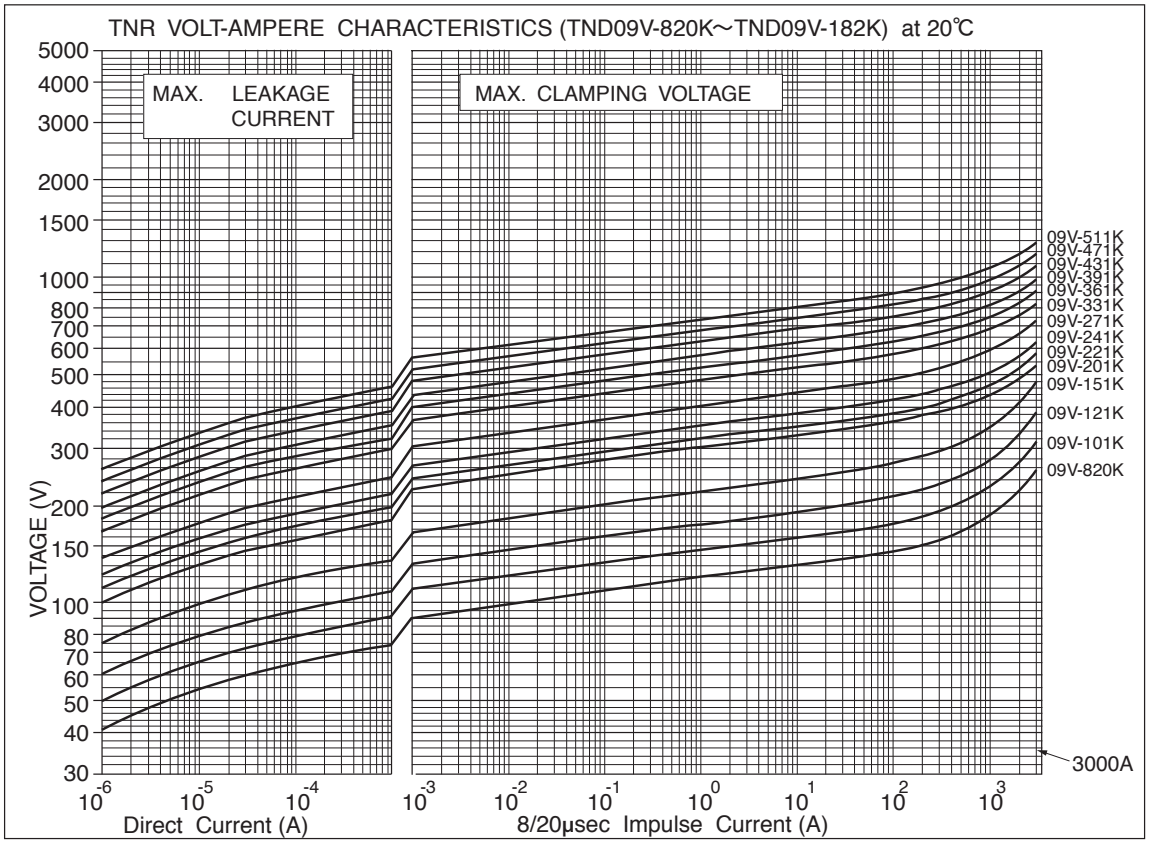

Product specifications in this catalog are subject to change without notice.Request our product specifications before purchase and/or use. Please use our products based on the information contained in this catalog and product specifications.

V Series

◆RATINGS (Type 10V)

Part Number	Previous Part Number (Just for your reference)	Maximum Ratings: Max. Allowable Voltage AC (Vrms)	Max. Allowable Voltage DC (V)	Max. Peak Current 8/20μs(A)	Max. Energy 2ms(J)	Rated Wattage (W)	Max. Clamping Voltage (A)	Max. Clamping Voltage (V)	Capacitance Typical @1kHz (pF)	Varistor Voltage V_{1mA} (V)	T Max. (mm)	E ±1.0 (mm)	W2 reference (mm)
TND10V-150KB00AAA0	TNR10V150K	8	12		2.0			30	9600	15 (13～ 17)	4.5	1.0	7.6
TND10V-180KB00AAA0	TNR10V180K	11	14		2.2			36	8000	18 (16～ 20)	4.6	1.1	7.6
TND10V-220KB00AAA0	TNR10V220K	14	18		2.6			43	7000	22 (20～ 24)	4.7	1.2	7.6
TND10V-270KB00AAA0	TNR10V270K	17	22	1000A/1 time	3.2			53	6000	27 (24～ 30)	4.8	1.3	7.6
TND10V-330KB00AAA0	TNR10V330K	20	26		4.0	0.05	5	65	5000	33 (30～ 36)	5.0	1.5	7.6
TND10V-390KB00AAA0	TNR10V390K	25	30	500A/2 times	4.7			77	4500	39 (35～ 43)	4.9	1.3	7.6
TND10V-470KB00AAA0	TNR10V470K	30	37		5.6			93	4000	47 (42～ 52)	5.0	1.4	7.6
TND10V-560KB00AAA0	TNR10V560K	35	44		6.7			110	3500	56 (50～ 62)	5.1	1.6	7.7
TND10V-680KB00AAA0	TNR10V680K	40	55		8.2			135	3200	68 (61～ 75)	5.3	1.8	7.7
TND10V-820KB00AAA0	TNR10V820K	50	65		10			135	1700	82 (74～ 90)	4.5	1.1	7.6
TND10V-101KB00AAA0	TNR10V101K	60	85		12			165	1600	100 (90～ 110)	4.7	1.3	7.6
TND10V-121KB00AAA0	TNR10V121K	75	100		14.5			200	1400	120 (108～ 132)	4.9	1.4	7.6
TND10V-151KB00AAA0	TNR10V151K	95	125		18			250	1300	150 (135～ 165)	5.2	1.7	7.7
TND10V-181KB00AAA0	TNR10V181K	110	145		22			300	900	180 (162～ 198)	4.7	1.1	7.6
TND10V-201KB00AAA0	TNR10V201K	130	170		25			340	500	200 (185～ 225)	4.8	1.2	7.6
TND10V-221KB00AAA0	TNR10V221K	140	180		27.5			360	450	220 (198～ 242)	4.9	1.3	7.6
TND10V-241KB00AAA0	TNR10V241K	150	200		30			395	400	240 (216～ 264)	5.0	1.3	7.6
TND10V-271KB00AAA0	TNR10V271K	175	225		35			455	350	270 (247～ 303)	5.2	1.4	7.6
TND10V-331KB00AAA0	TNR10V331K	210	270		42			545	300	330 (297～ 363)	5.5	1.6	7.7
TND10V-361KB00AAA0	TNR10V361K	230	300		45			595	280	360 (324～ 396)	5.7	1.8	7.7
TND10V-391KB00AAA0	TNR10V391K	250	320	3500A/1 time	50			650	260	390 (351～ 429)	5.8	1.9	7.7
TND10V-431KB00AAA0	TNR10V431K	275	350		55	0.4	25	710	240	430 (387～ 473)	6.0	2.0	7.8
TND10V-471KB00AAA0	TNR10V471K	300	385	2500A/2 times	60			775	220	470 (423～ 517)	6.2	2.1	7.8
TND10V-511KB00AAA0	TNR10V511K	320	410		67			845	210	510 (459～ 561)	6.4	2.3	7.8
TND10V-561KB00AAA0	TNR10V561K	350	460		67			922	195	560 (504～ 616)	6.7	2.5	7.9
TND10V-621KB00AAA0	TNR10V621K	385	505		67			1025	180	620 (558～ 682)	7.1	2.7	8.0
TND10V-681KB00AAA0	TNR10V681K	420	560		67			1120	165	680 (612～ 748)	7.4	2.9	8.0
TND10V-751KB00AAA0	TNR10V751K	460	615		70			1240	150	750 (675～ 825)	7.8	3.1	8.1
TND10V-821KB00AAA0	TNR10V821K	510	670		80			1355	140	820 (738～ 902)	8.1	3.4	8.2
TND10V-911KB00AAA0	TNR10V911K	550	745		90			1500	125	910 (819～1001)	8.6	3.7	8.4
TND10V-102KB00AAA0	TNR10V102K	625	825		100			1650	115	1000 (900～1100)	9.1	4.0	8.5
TND10V-112KB00AAA0	TNR10V112K	680	895		110			1815	105	1100 (990～1210)	9.7	4.4	8.7
TND10V-122KB00AAA0	TNR10V122K	720	980		120			1950	95	1200 (1080～1320)	10.5	4.7*	8.9**
TND10V-152KB00AAA0	TNR10V152K	860	1220		150			2440	85	1500 (1350～1650)	12.4	5.8*	9.5**
TND10V-182KB00AAA0	TNR10V182K	1000	1465		183			2970	70	1800 (1700～1980)	14.4	6.9*	10.2**

*E±2 **W2±2

◆DIMENSIONS [mm]

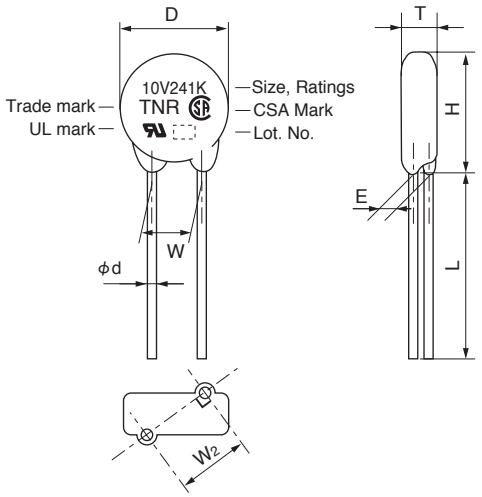

Part Number	D Max.	H Max.	T Max.	L Min.	φd ±0.05	W ±1.0
TND10V-150K to TND10V-511K	11.5	14.5	Ref. to RATINGS	20.0	0.8	7.5
TND10V-561K to TND10V-112K	12.5	15.5				
TND10V-122K to TND10V-182K	13.5	16.5				

Product specifications in this catalog are subject to change without notice.Request our product specifications before purchase and/or use. Please use our products based on the information contained in this catalog and product specifications.

V Series

◆V-I CURVE (Type 10V)

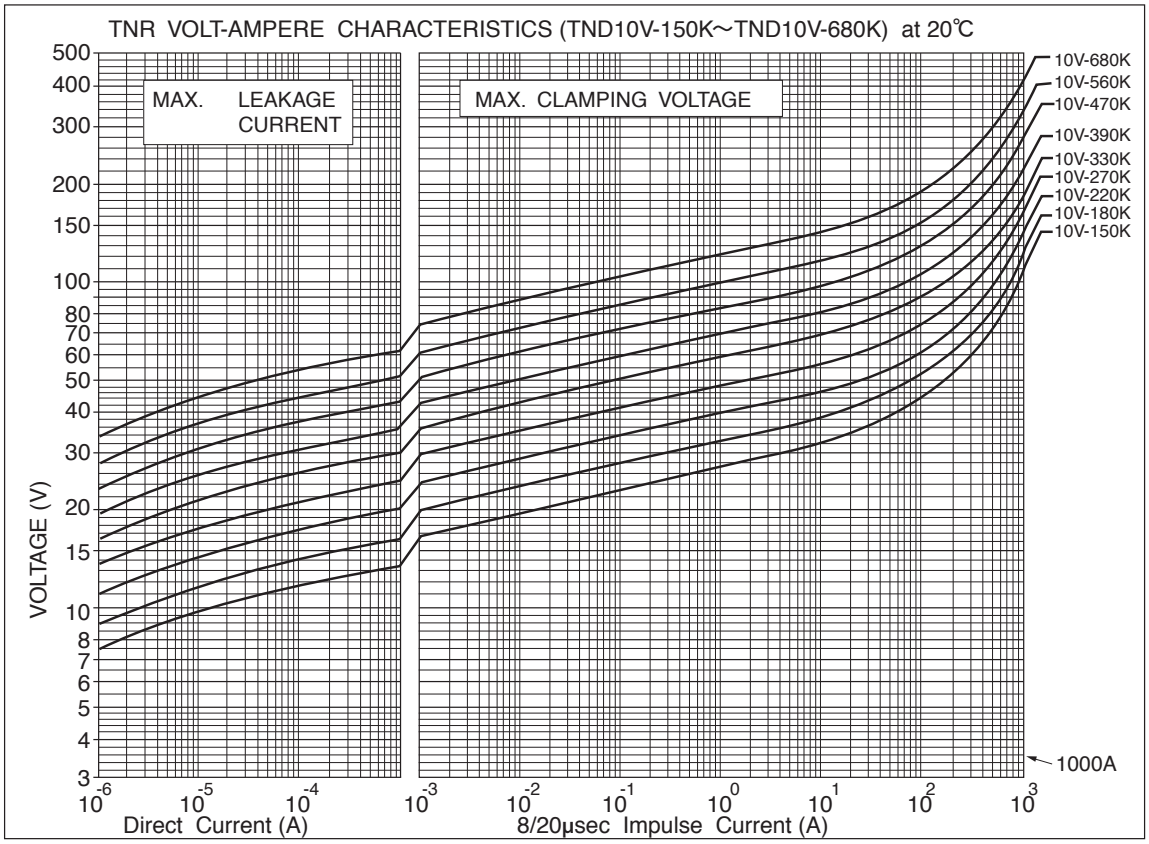

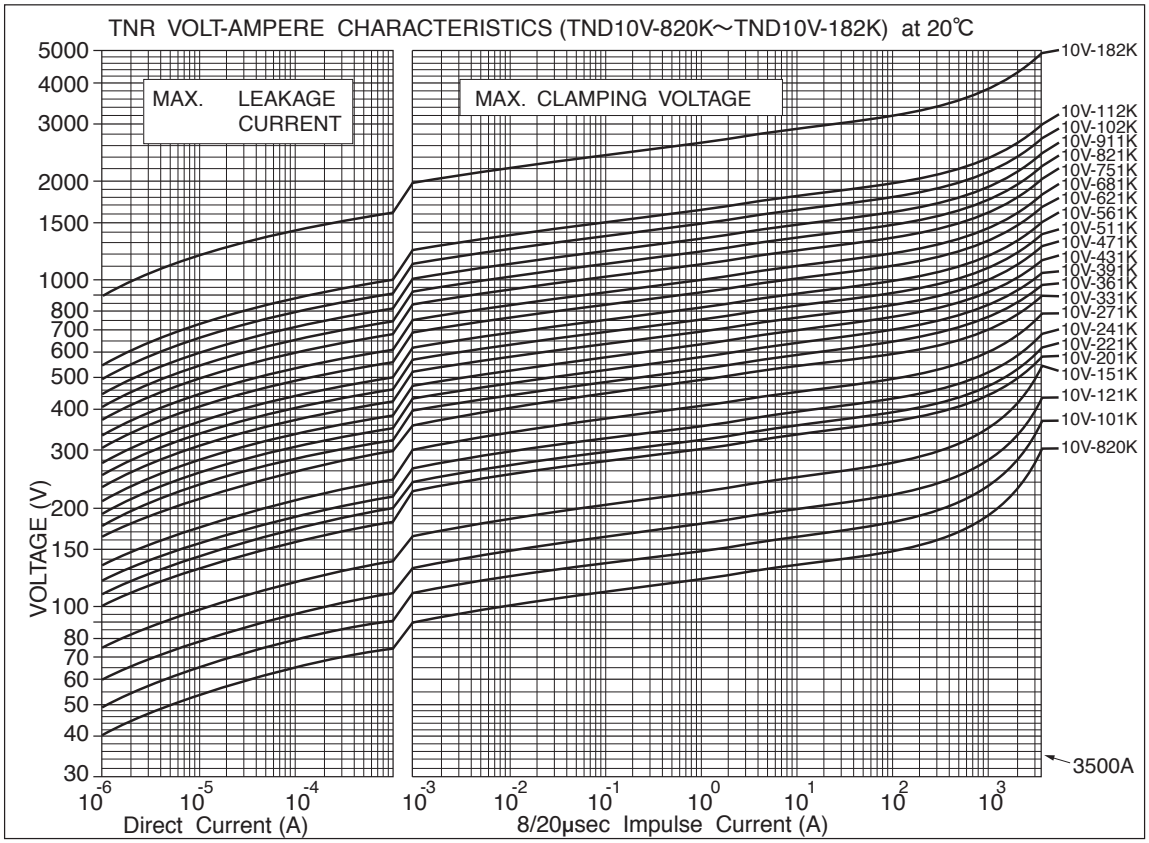

Product specifications in this catalog are subject to change without notice.Request our product specifications before purchase and/or use. Please use our products based on the information contained in this catalog and product specifications.

V Series

◆RATINGS (Type 12V)

Part Number	Previous Part Number (Just for your reference)	Maximum Ratings: Max. Allowable Voltage AC (Vrms)	Max. Allowable Voltage DC (V)	Max. Peak Current 8/20μs(A)	Max. Energy 2ms(J)	Rated Wattage (W)	Max. Clamping Voltage (A)	Max. Clamping Voltage (V)	Capacitance Typical @1kHz (pF)	Varistor Voltage V_{1mA} (V)	T Max. (mm)	E ±1.0 (mm)	W2 reference (mm)
TND12V-431KB00AAA0	TNR12V431K	275	350		55			710	375	430 (387～ 473)	6.0	2.0	7.8
TND12V-471KB00AAA0	TNR12V471K	300	385		60			775	345	470 (423～ 517)	6.2	2.1	7.8
TND12V-511KB00AAA0	TNR12V511K	320	410		67			845	330	510 (459～ 561)	6.4	2.3	7.8
TND12V-561KB00AAA0	TNR12V561K	350	460		67			922	305	560 (504～ 616)	6.7	2.5	7.9
TND12V-621KB00AAA0	TNR12V621K	385	505		67			1025	280	620 (558～ 682)	7.1	2.7	8.0
TND12V-681KB00AAA0	TNR12V681K	420	560	4,200A/1 time	67			1120	260	680 (612～ 748)	7.4	2.9	8.0
TND12V-751KB00AAA0	TNR12V751K	460	615		70	0.4	25	1240	235	750 (675～ 825)	7.8	3.1	8.1
TND12V-821KB00AAA0	TNR12V821K	510	670	3,000A/2 times	80			1355	220	820 (738～ 902)	8.1	3.4	8.2
TND12V-911KB00AAA0	TNR12V911K	550	745		90			1500	195	910 (819～ 1001)	8.6	3.7	8.4
TND12V-102KB00AAA0	TNR12V102K	625	825		100			1650	180	1000 (900～ 1100)	9.1	4.0	8.5
TND12V-112KB00AAA0	TNR12V112K	680	895		110			1815	165	1100 (990～ 1210)	9.7	4.4	8.7
TND12V-122KB00AAA0	TNR12V122K	720	980		120			1950	150	1200 (1080～ 1320)	10.5	4.7*	8.9**
TND12V-152KB00AAA0	TNR12V152K	860	1220		150			2440	135	1500 (1350～ 1650)	12.4	5.8*	9.5**
TND12V-182KB00AAA0	TNR12V182K	1000	1465		183			2970	110	1800 (1700～ 1980)	14.4	6.9*	10.2**

*E±2 **W2±2

◆DIMENSIONS [mm]

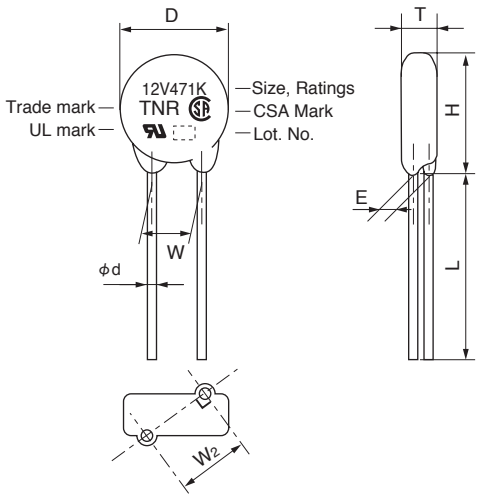

Part Number	D Max.	H Max.	T Max.	L Min.	φd ±0.05	W ±1.0
TND12V-431K to TND12V-102K	14.0	17.0	Ref. to RATINGS	20	0.8	7.5
TND12V-112K	15.0	18.0				
TND12V-122K						
TND12V-152K to TND12V-182K	16.0	19.0				

Product specifications in this catalog are subject to change without notice.Request our product specifications before purchase and/or use. Please use our products based on the information contained in this catalog and product specifications.

V Series

◆V-I CURVE (Type 12V)

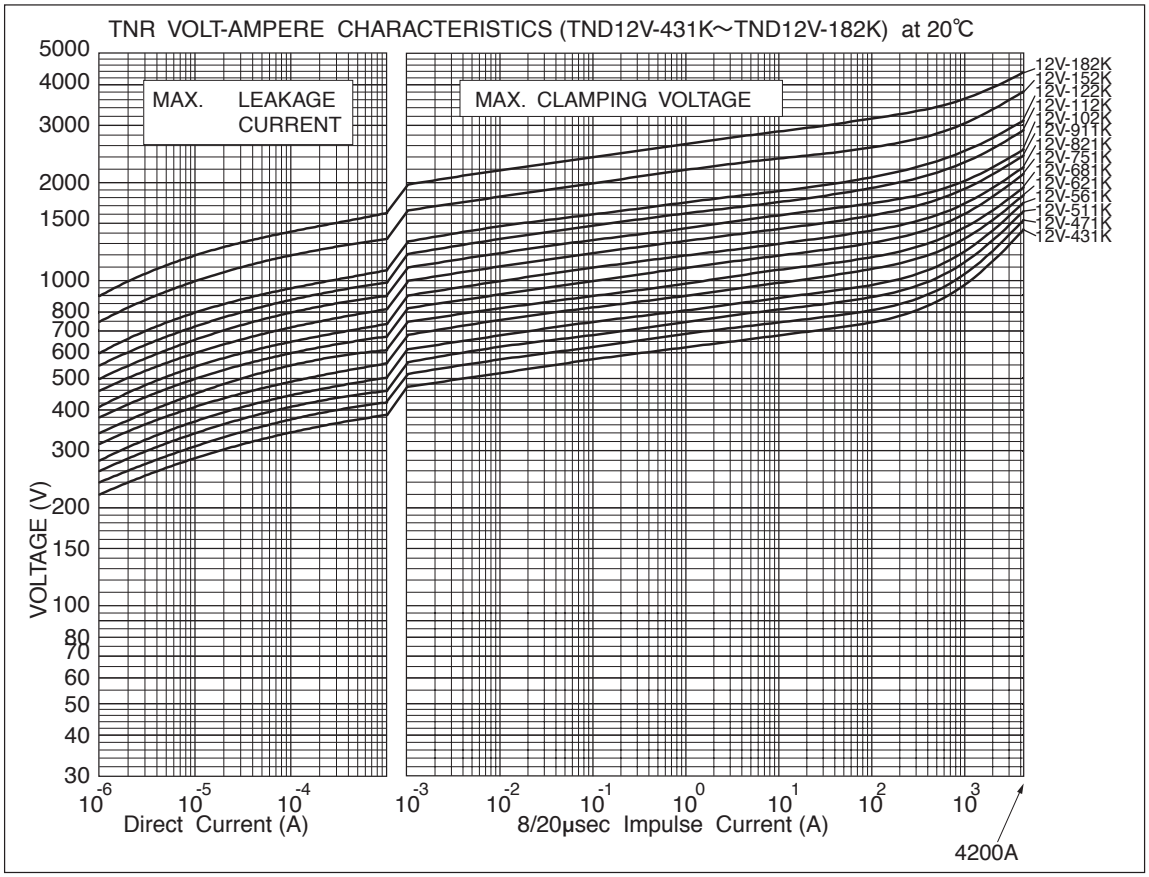

V Series

◆RATINGS (Type 14V)

Part Number	Previous Part Number (Just for your reference)	Maximum Ratings: Max. Allowable Voltage AC (Vrms)	Max. Allowable Voltage DC (V)	Max. Peak Current 8/20μs(A)	Max. Energy 2ms(J)	Rated Wattage (W)	Max. Clamping Voltage (A)	Max. Clamping Voltage (V)	Capacitance Typical @1kHz (pF)	Varistor Voltage V1mA (V)	T Max. (mm)	E ±1.0 (mm)	W2 Reference (mm)
TND14V-150KB00AAA0	TNR14V150K	8	12		3.6			30	19500	15 (13～ 17)	4.5	1.0	7.6
TND14V-180KB00AAA0	TNR14V180K	11	14		4.3			36	16500	18 (16～ 20)	4.6	1.1	7.6
TND14V-220KB00AAA0	TNR14V220K	14	18		5.3			43	13500	22 (20～ 24)	4.7	1.2	7.6
TND14V-270KB00AAA0	TNR14V270K	17	22	2000A/1 time	6.5			53	12000	27 (24～ 30)	4.8	1.4	7.6
TND14V-330KB00AAA0	TNR14V330K	20	26		7.9	0.1	10	65	10000	33 (30～ 36)	5.0	1.6	7.7
TND14V-390KB00AAA0	TNR14V390K	25	30	1000A/2 times	9.4			77	9000	39 (35～ 43)	4.9	1.3	7.6
TND14V-470KB00AAA0	TNR14V470K	30	37		11			93	8000	47 (42～ 52)	5.0	1.5	7.6
TND14V-560KB00AAA0	TNR14V560K	35	44		13			110	7500	56 (50～ 62)	5.1	1.7	7.7
TND14V-680KB00AAA0	TNR14V680K	40	55		16			135	6500	68 (61～ 75)	5.3	2.0	7.8
TND14V-820KB00AAA0	TNR14V820K	50	65		20			135	3000	82 (74～ 90)	4.5	1.1	7.6
TND14V-101KB00AAA0	TNR14V101K	60	85		25			165	2700	100 (90～ 110)	4.7	1.3	7.6
TND14V-121KB00AAA0	TNR14V121K	75	100		30			200	2500	120 (108～ 132)	4.9	1.4	7.6
TND14V-151KB00AAA0	TNR14V151K	95	125		37			250	2300	150 (135～ 165)	5.2	1.7	7.7
TND14V-181KB00AAA0	TNR14V181K	110	145		45			300	1650	180 (162～ 198)	4.7	1.1	7.6
TND14V-201KB00AAA0	TNR14V201K	130	170		50			340	950	200 (185～ 225)	4.8	1.2	7.6
TND14V-221KB00AAA0	TNR14V221K	140	180	6000A/1 time	55			360	850	220 (198～ 242)	4.9	1.3	7.6
TND14V-241KB00AAA0	TNR14V241K	150	200		60			395	800	240 (216～ 264)	5.0	1.4	7.6
TND14V-271KB00AAA0	TNR14V271K	175	225	5000A/2 times	70			455	700	270 (247～ 303)	5.2	1.5	7.6
TND14V-331KB00AAA0	TNR14V331K	210	270		80			545	600	330 (297～ 363)	5.5	1.7	7.7
TND14V-361KB00AAA0	TNR14V361K	230	300		90			595	550	360 (324～ 396)	5.7	1.8	7.7
TND14V-391KB00AAA0	TNR14V391K	250	320		100			650	500	390 (351～ 429)	5.8	1.9	7.7
TND14V-431KB00AAA0	TNR14V431K	275	350		110	0.6	50	710	460	430 (387～ 473)	6.0	2.1	7.8
TND14V-471KB00AAA0	TNR14V471K	300	385		125			775	420	470 (423～ 517)	6.2	2.2	7.8
TND14V-511KB00AAA0	TNR14V511K	320	410		136			845	390	510 (459～ 561)	6.4	2.4	7.9
TND14V-561KB00AAA0	TNR14V561K	350	460		136			922	360	560 (504～ 616)	6.7	2.6	7.9
TND14V-621KB00AAA0	TNR14V621K	385	505		136			1025	330	620 (558～ 682)	7.1	2.8	8.0
TND14V-681KB00AAA0	TNR14V681K	420	560		136			1120	310	680 (612～ 748)	7.4	3.0	8.1
TND14V-751KB00AAA0	TNR14V751K	460	615		150			1240	280	750 (675～ 825)	7.8	3.3	8.2
TND14V-821KB00AAA0	TNR14V821K	510	670	5000A/1 time	165			1355	250	820 (738～ 902)	8.1	3.5	8.3
TND14V-911KB00AAA0	TNR14V911K	550	745		180			1500	230	910 (819～1001)	8.6	3.9	8.5
TND14V-102KB00AAA0	TNR14V102K	625	825	4500A/2 times	200			1650	210	1000 (900～1100)	9.1	4.2	8.6
TND14V-112KB00AAA0	TNR14V112K	680	895		220			1815	190	1100 (990～1210)	9.7	4.6	8.8
TND14V-122KB00AAA0	TNR14V122K	720	980		240			1950	170	1200 (1080～1320)	10.5	4.9*	9.0**
TND14V-152KB00AAA0	TNR14V152K	860	1220		300			2440	150	1500 (1350～1650)	12.4	6.0*	9.6**
TND14V-182KB00AAA0	TNR14V182K	1000	1465		360			2970	120	1800 (1700～1980)	14.4	7.1*	10.3**

*E±2 **W2±2

◆DIMENSIONS [mm]

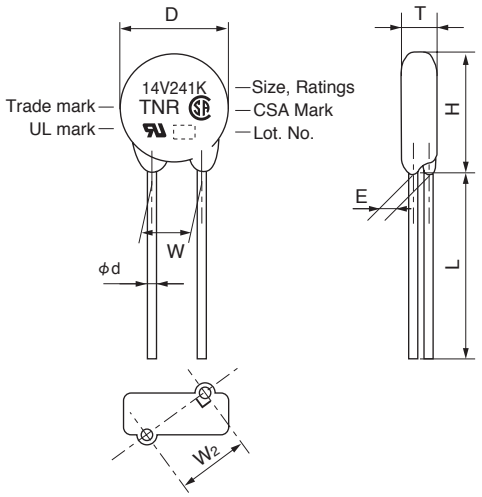

Part Number	D Max.	H Max.	T Max.	L Min.	φd ±0.05	W ±1.0
TND14V-150K to TND14V-511K	15.5	18.5	Ref. to RATINGS	20	0.8	7.5
TND14V-561K to TND14V-112K	16.0	19.0				
TND14V-122K to TND14V-182K	17.0	20.5				

Product specifications in this catalog are subject to change without notice.Request our product specifications before purchase and/or use. Please use our products based on the information contained in this catalog and product specifications.

V Series

◆V-I CURVE (Type 14V)

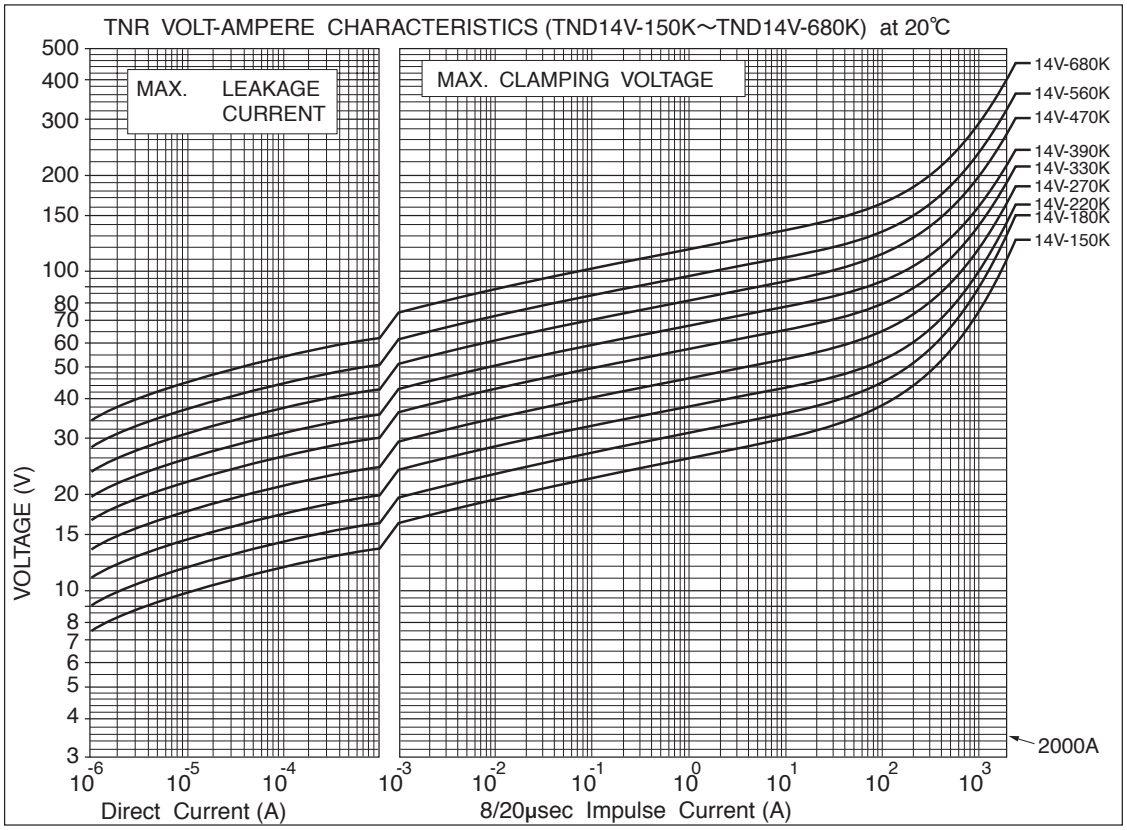

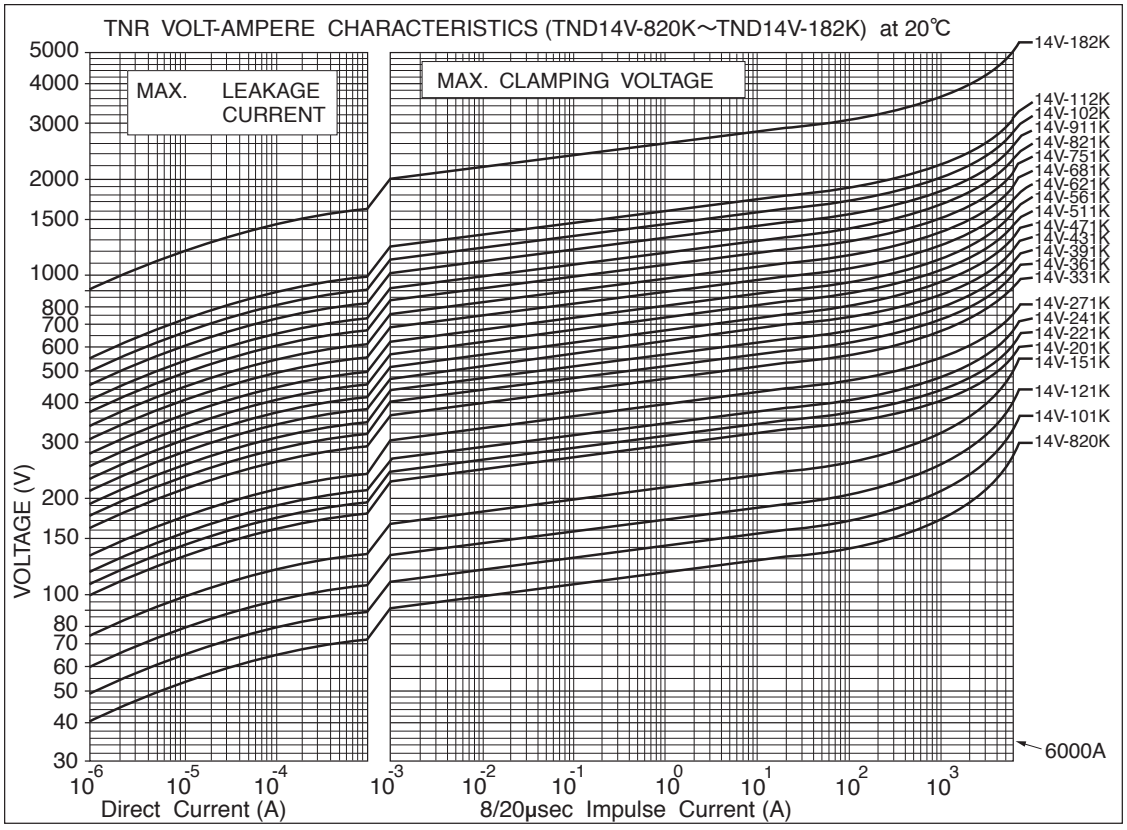

Product specifications in this catalog are subject to change without notice.Request our product specifications before purchase and/or use. Please use our products based on the information contained in this catalog and product specifications.

V Series

◆RATINGS (Type 20V)

Part Number	Previous Part Number (Just for your reference)	Maximum Ratings: Max. Allowable Voltage AC (Vrms)	Max. Allowable Voltage DC (V)	Max. Peak Current 8/20μs(A)	Max. Energy 2ms(J)	Rated Wattage (W)	Max. Clamping Voltage (A)	Max. Clamping Voltage (V)	Capacitance Typical @1kHz (pF)	Varistor Voltage V1mA (V)	T Max. (mm)	E ±1.0 (mm)	W2 Reference (mm)
TND20V-180KB00AAA0	TNR20V180K	11	14		12			36	39000	18 (16～ 20)	5.1	1.1	10.1
TND20V-220KB00AAA0	TNR20V220K	14	18		14			43	33000	22 (20～ 24)	5.2	1.2	10.1
TND20V-270KB00AAA0	TNR20V270K	17	22	3000A/1 time	17			53	28000	27 (24～ 30)	5.3	1.4	10.1
TND20V-330KB00AAA0	TNR20V330K	20	26		21	0.2	20	65	24000	33 (30～ 36)	5.5	1.6	10.1
TND20V-390KB00AAA0	TNR20V390K	25	30	2000A/2 times	25			77	21000	39 (35～ 43)	5.5	1.3	10.1
TND20V-470KB00AAA0	TNR20V470K	30	37		30			93	19000	47 (42～ 52)	5.6	1.5	10.1
TND20V-560KB00AAA0	TNR20V560K	35	44		36			110	17000	56 (50～ 62)	5.7	1.7	10.1
TND20V-680KB00AAA0	TNR20V680K	40	55		44			135	15000	68 (61～ 75)	5.8	2.0	10.2
TND20V-820KB00AAA0	TNR20V820K	50	65		40			135	6700	82 (74～ 90)	4.9	1.2	10.1
TND20V-101KB00AAA0	TNR20V101K	60	85		50			165	6100	100 (90～ 110)	5.1	1.4	10.1
TND20V-121KB00AAA0	TNR20V121K	75	100		60			200	5600	120 (108～ 132)	5.3	1.5	10.1
TND20V-151KB00AAA0	TNR20V151K	95	125		75			250	5100	150 (135～ 165)	5.6	1.8	10.2
TND20V-181KB00AAA0	TNR20V181K	110	145		85			300	3900	180 (162～ 198)	5.1	1.2	10.1
TND20V-201KB00AAA0	TNR20V201K	130	170		100			340	2700	200 (185～ 225)	5.2	1.2	10.1
TND20V-221KB00AAA0	TNR20V221K	140	180	10000A/1 time	110			360	2500	220 (198～ 242)	5.3	1.3	10.1
TND20V-241KB00AAA0	TNR20V241K	150	200		120			395	2300	240 (216～ 264)	5.4	1.4	10.1
TND20V-271KB00AAA0	TNR20V271K	175	225	7000A/2 times	135			455	2000	270 (247～ 303)	5.6	1.5	10.1
TND20V-331KB00AAA0	TNR20V331K	210	270		160			545	1700	330 (297～ 363)	5.9	1.7	10.1
TND20V-361KB00AAA0	TNR20V361K	230	300		180			595	1500	360 (324～ 396)	6.1	1.9	10.2
TND20V-391KB00AAA0	TNR20V391K	250	320		195			650	1400	390 (351～ 429)	6.2	2.0	10.2
TND20V-431KB00AAA0	TNR20V431K	275	350		215	1.0	100	710	1300	430 (387～ 473)	6.4	2.1	10.2
TND20V-471KB00AAA0	TNR20V471K	300	385		250			775	1200	470 (423～ 517)	6.6	2.3	10.3
TND20V-511KB00AAA0	TNR20V511K	320	410		273			845	1100	510 (459～ 561)	6.8	2.4	10.3
TND20V-561KB00AAA0	TNR20V561K	350	460		273			922	1000	560 (504～ 616)	7.1	2.6	10.3
TND20V-621KB00AAA0	TNR20V621K	385	505		273			1025	900	620 (558～ 682)	7.5	2.9	10.4
TND20V-681KB00AAA0	TNR20V681K	420	560		273			1120	830	680 (612～ 748)	7.8	3.1	10.5
TND20V-751KB00AAA0	TNR20V751K	460	615		300			1240	750	750 (675～ 825)	8.2	3.4	10.6
TND20V-821KB00AAA0	TNR20V821K	510	670	7500A/1 time	325			1355	700	820 (738～ 902)	8.5	3.6	10.6
TND20V-911KB00AAA0	TNR20V911K	550	745		360			1500	620	910 (819～1001)	9.0	4.0	10.8
TND20V-102KB00AAA0	TNR20V102K	625	825	6500A/2 times	400			1650	560	1000 (900～1100)	9.5	4.3	10.9
TND20V-112KB00AAA0	TNR20V112K	680	895		440			1815	510	1100 (990～1210)	10.1	4.7	11.0
TND20V-122KB00AAA0	TNR20V122K	720	980		480			1950	450	1200 (1080～1320)	10.8	5.1*	11.2**
TND20V-152KB00AAA0	TNR20V152K	860	1220		600			2440	390	1500 (1350～1650)	12.8	6.2*	11.8**
TND20V-182KB00AAA0	TNR20V182K	1000	1465		720			2970	340	1800 (1700～1980)	14.8	7.4*	12.4**

*E±2 **W2±2

◆DIMENSIONS [mm]

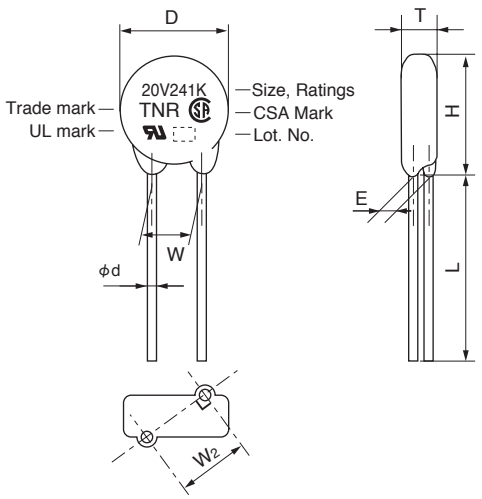

Part Number	D Max.	H Max.	T Max.	L Min.	φd ±0.05	W ±1.0
TND20V-180K to TND20V-511K	21.5	24.5	Ref. to Ratings	20	0.8	10.0
TND20V-561K to TND20V-112K	22.5	25.5				
TND20V-122K to TND20V-182K	23.5	28.0				

Product specifications in this catalog are subject to change without notice.Request our product specifications before purchase and/or use. Please use our products based on the information contained in this catalog and product specifications.

V Series

◆V-I CURVE (Type 20V)

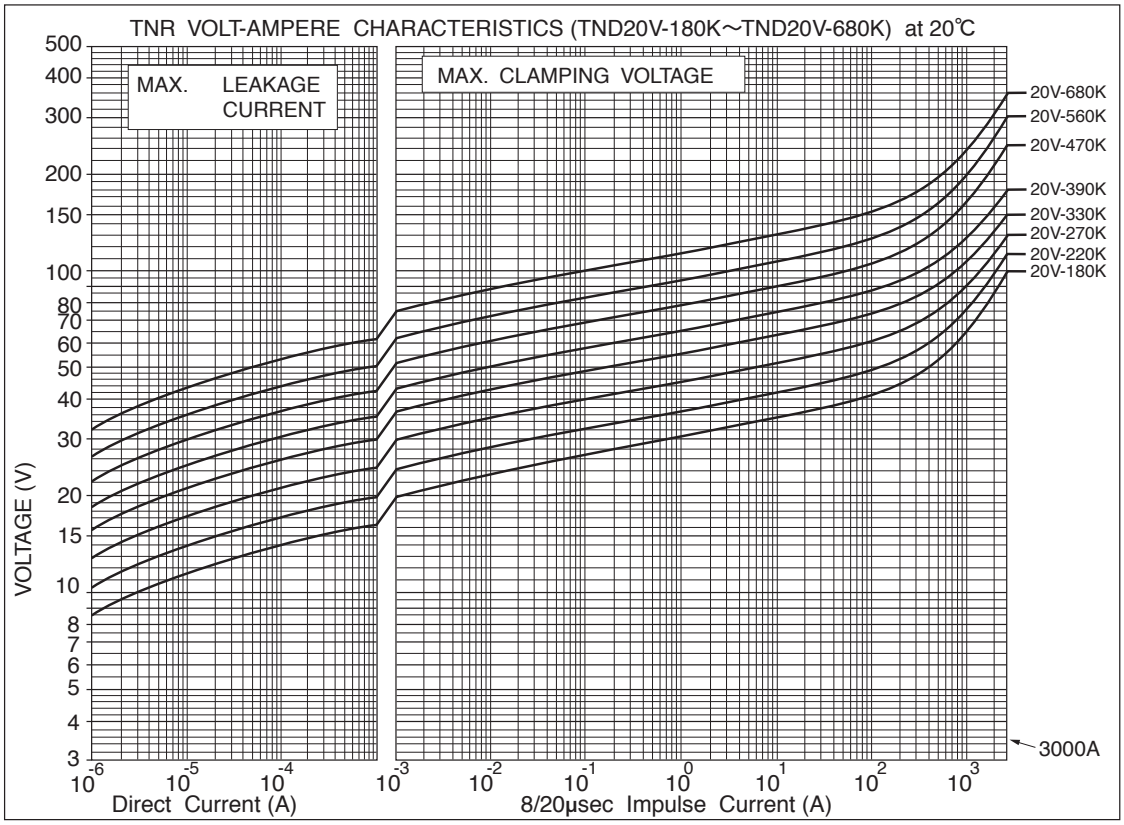

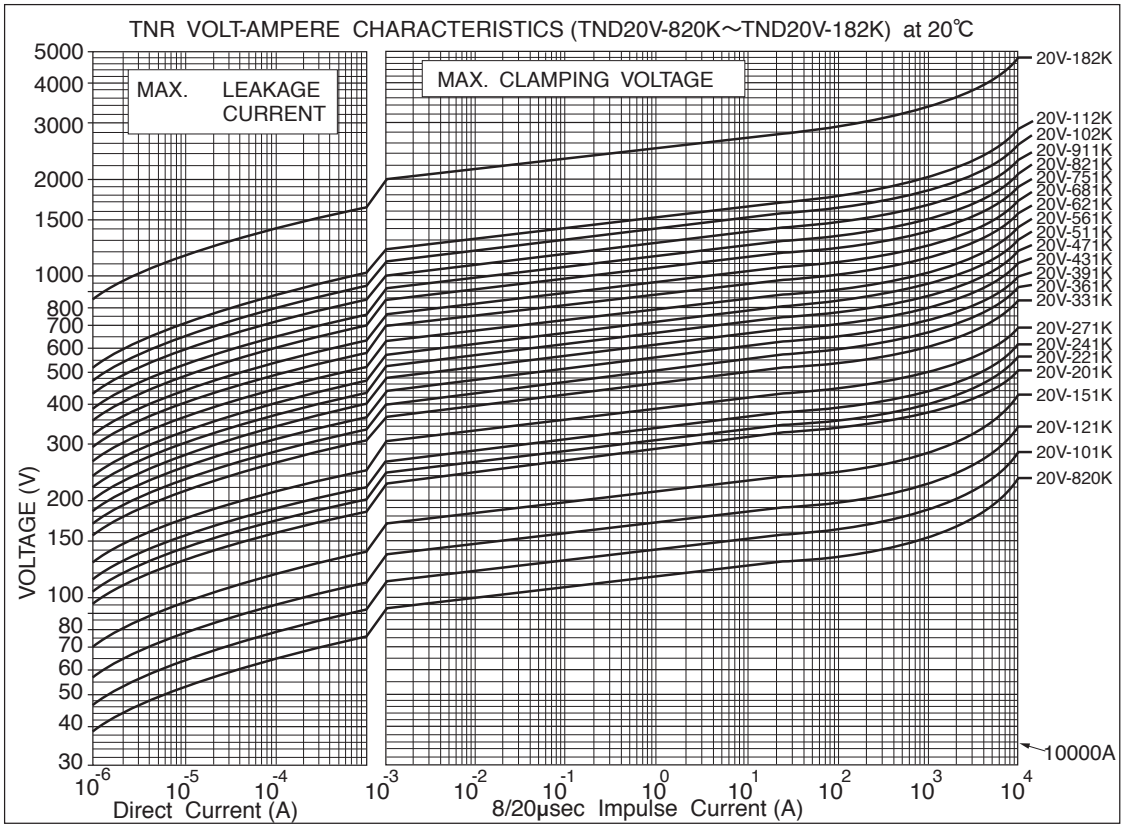

Product specifications in this catalog are subject to change without notice.Request our product specifications before purchase and/or use. Please use our products based on the information contained in this catalog and product specifications.

V Series

◆GENERAL SPECIFICATIONS

Item	Test Conditions	Specifications
Standard Test Condition	20±15℃, 85%RH Max.	
Varistor Voltage	Voltage across varistor at specified current. Type: 5V — Current CmA: 0.1 Type: 7V, 9V, 10V, 12V, 14V, 20V — Current CmA: 1.0	Satisfy the specification
Maximum Allowable Voltage	Maximum continuous AC voltage (50 to 60Hz AC) and maximum DC voltage which can be applied.	Satisfy the specification
Maximum Peak Surge Current	Maximum surge current (8/20μs pulse wave to be applied once, or twice, 2 minutes apart) for varistor voltage change within ±10% of the initial value.	Satisfy the specification
Energy Rating	Maximum energy (2 ms. square wave to be applied once) for varistor voltage change within ±10% of the initial value.	Satisfy the specification
Rated Wattage	Maximum power (50 to 60Hz AC power to be applied for 1000 hours at 85±2℃) for varistor voltage change within ±10% of the initial value.	Satisfy the specification
Maximum Clamping Voltage	Maximum voltage across varistor when 8/20μs rated current surge is applied.	Satisfy the specification
Capacitance	Varistor's capacitance at 1kHz, standard test condition.	For reference only.
Voltage Temperature Coefficient	$\frac{\text{VcmA at 85℃} - \text{VcmA at 25℃}}{\text{VcmA at 25℃}} \times \frac{1}{60} \times 100\ (\%/℃)$ VcmA : Actual varistor voltage	Within ±0.05%/℃
Insulation	Short circuit the two leads of varistor, and put the varistor body into metal balls (1.6mm diameter) leaving 2mm epoxy coating outside. Then, apply 2.5kVrms between the leads and the metal balls for 60±5 sec..	The varistor shall withstand with no abnormality.

◆ENVIRONMENTAL CHARACTERISTICS

Item	Test Conditions	Specifications
High Temperature Storage (Dry heat)	The specimen shall be subjected 125±2℃ for 1000±12 hours without load.	ΔVcmA/VcmA≦±5% However, on varistors have nominal varistor voltages from 15V to 68V, the varistor voltage change shall be ΔVcmA/VcmA≦±10%
Low Temperature Storage	The specimen shall be subjected -40±2℃ for 1000±12 hours without load.	ΔVcmA/VcmA≦±5%
Damp heat (Humidity)	The specimen shall be subjected to 40±2℃, 90 to 95%RH for 1000±12 hours without load.	ΔVcmA/VcmA≦±5%
Temperature Cycle	The temperature cycle shown below shall be repeated 5 cycles. -40±3℃, 30 minutes ⇔ +85±2℃, 30 minutes	ΔVcmA/VcmA≦±5% No remarkable damage
High Temperature Operating	The specimen shall be subjected to 85±2℃ with the maximum allowable voltage for 1000±12 hours.	ΔVcmA/VcmA≦±10%
Damp heat Operating	The specimen shall be subjected to 40±2℃, 90 to 95%RH with the maximum allowable voltage for 1000±12 hours.	ΔVcmA/VcmA≦±10%

Varistor voltage change of forward direction shall be measured in the test of unipolar surge life and DC load life.
Varistor voltage change is measured after stored at Standard Test Conditions for 1 to 2 hours.
Note : For 42V battery line, please contact our sales office.

Product specifications in this catalog are subject to change without notice.Request our product specifications before purchase and/or use. Please use our products based on the information contained in this catalog and product specifications.

V Series

◆MECHANICAL CHARACTERISTICS

<table>
<tr><th>Item</th><th>Test Conditions</th><th>Specifications</th></tr>
<tr><td>Resistance to Soldering Heat</td><td>Each lead shall be dipped into a solder bath having a temperature of 350±10℃ to a point 2.0 to 2.5 mm from the body of the unit, be held there for 3^{+1}_{-0} sec and then be stored at room temperature for 1 to 2 hours. The ΔVcmA and mechanical damage shall be examined.
or
Each lead shall be dipped into a solder bath having a temperature of 260±10℃ to a point 2.0 to 2.5 mm from the body of the unit, be held there for 10±1 sec and then be stored at room temperature for 1 to 2 hours. The ΔVcmA and mechanical damage shall be examined.</td><td>ΔVcmA/VcmA ≦±5%
No remarkable damage</td></tr>
<tr><td>Solderability</td><td>Each lead shall be dipped into a methanol solution (about 25%) of rosin for 5 to 10 sec.
Then each lead shall be dipped into a solder.
<table>
<tr><td>Solder</td><td>Pb free (Sn-3.0Ag-0.5Cu)</td><td>Eutectic (Sn/Pb)</td></tr>
<tr><td>Solder Temp.</td><td>245±5℃</td><td>235±5℃</td></tr>
<tr><td>Dipping Time</td><td colspan="2">2±0.5sec.</td></tr>
<tr><td>Dipping Depth</td><td colspan="2">1.5 to 2.0mm (from the body)</td></tr>
</table></td><td>At least, 95% of the leads shall be covered with solder uniformly.</td></tr>
<tr><td>Lead Pull Strength</td><td>Fix varistor body, and suspend specified weight toward direction of lead axis.
<table>
<tr><td>Type</td><td>Lead Diameter</td><td>Weight</td></tr>
<tr><td>5V, 7V, 9V</td><td>0.6mm</td><td>10N</td></tr>
<tr><td>10V, 12V, 14V, 20V</td><td>0.8mm</td><td>10N</td></tr>
</table></td><td>No abnormality such as disconnection.

ΔVcmA/VcmA ≦±5%</td></tr>
<tr><td>Lead Bend Strength</td><td>Fix varistor body vertically. Then suspend specified weight and bent the varistor body by 90°, and return it to the original position. Carry out the operation in the opposite direction and return the body to the original position.
<table>
<tr><td>Type</td><td>Lead Diameter</td><td>Weight</td></tr>
<tr><td>5V, 7V, 9V</td><td>0.6mm</td><td>5N</td></tr>
<tr><td>10V, 12V, 14V, 20V</td><td>0.8mm</td><td>5N</td></tr>
</table></td><td>The leads shall not disconnect, slacken and peel off.</td></tr>
<tr><td>Vibration</td><td>Mount varistor body on vibrator, and conduct the follwing vibration test.
Peak-to-Peak amplitude : 1.5mm
Vibration frequency range : 10Hz to 55Hz
Sweeping time:
Approximately one minute for 10Hz →55Hz →10Hz
Direction and duration of vibration :
Three directions of X, Y and Z. Two hours each.
Six hours total.</td><td>No remarkable appearance abnormality.

ΔVcmA/VcmA ≦±5%</td></tr>
</table>

Product specifications in this catalog are subject to change without notice.Request our product specifications before purchase and/or use. Please use our products based on the information contained in this catalog and product specifications.