AN-2183 LMR62014/LMR64010 Demo Board

1 Introduction

The Texas Instruments LMR62014 and LMR64010 are high frequency switching boost regulators that offer small size and high power conversion efficiency. The parts operate at a 1.6MHz switching frequency. The primary difference between the LMR62014 and LMR64010 is that the LMR62014 has a higher current internal switch FET (with lower breakdown voltage), while the LMR64010 has a higher voltage FET which handles less current. The LMR64010 targets applications with higher output voltages, while the LMR62014 is intended for applications requiring higher load currents at lower output voltages. This user's guide describes the demo board supplied to demonstrate the operation of these parts and give information on its usage.

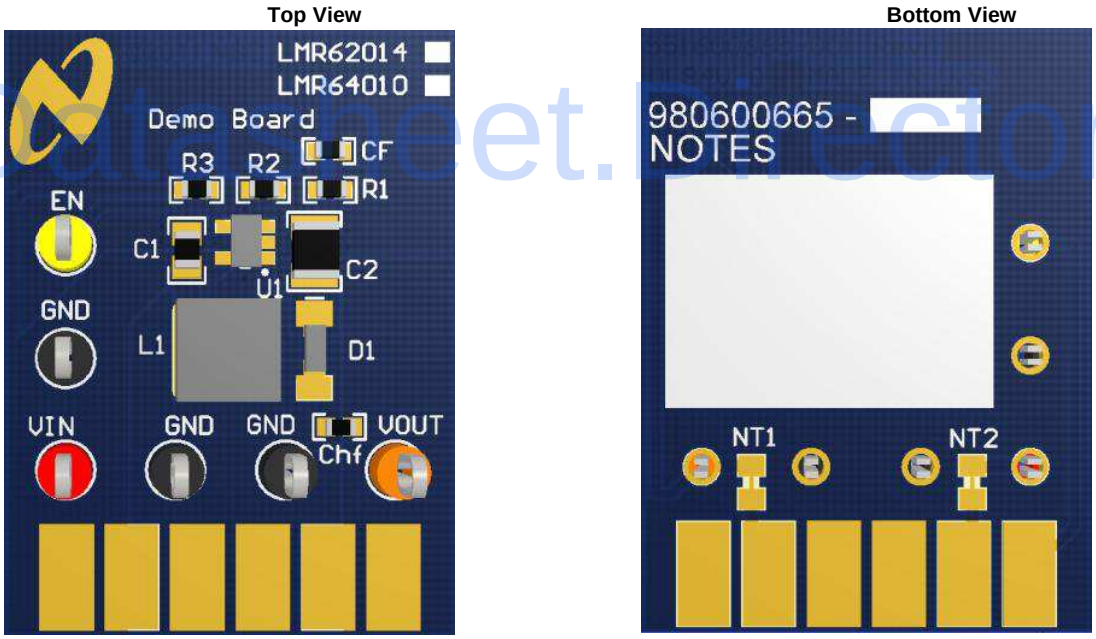

Figure 1. LMR62014/LMR64010 Demo Board

2 Features

- 2.7V to 12V Input Voltage Range
- 12V Output Voltage, and 450mA Output Current from 5V input supply (LMR62014)
- 24V Output Voltage, and 125mA Output Current from 5V input supply (LMR64010)
- Switching Frequency of 1.6 MHz
- Minimal Component Count
- Small Solution Size (12mm × 17mm)

All trademarks are the property of their respective owners.

Copyright © 2011–2013, Texas Instruments Incorporated

3 Shutdown Operation

The demo board includes a pull-up resistor R3 to enable the device once V_{IN} has exceeded 1.5V. Use the EN post to disable the device by pulling this node to GND. A logic signal may be applied to the post to test startup and shutdown of the device.

4 Adjusting the Output Voltage

The output voltage can be changed from 12V/24V to another voltage by adjusting the feedback resistors using the following equation:

$$V_{OUT} = V_{FB}(1 + (R1/R2)) \quad (1)$$

Where V_{FB} is 1.23V.

5 Feedforward Compensation

The feedforward capacitor CF should be selected to set the compensation zero at approximately 8 kHz. The value of CF is calculated using:

$$CF = 1 / (2 \times \pi \times 8k \times R1) \quad (2)$$

The value of CF is calculated after R1 is selected for the output voltage needed for the specific application.

For more information on component selection and features, see:

- *LMR62014 SIMPLE SWITCHER 20Vout, 1.4A Step-Up Voltage Regulator in SOT-23* (SNVS735)
- *LMR64010 SIMPLE SWITCHER 40Vout, 1A Step-Up Voltage Regulator in SOT-23* (SNVS736)

Copyright © 2011–2013, Texas Instruments Incorporated

6 LMR62014 Demo Board Schematic

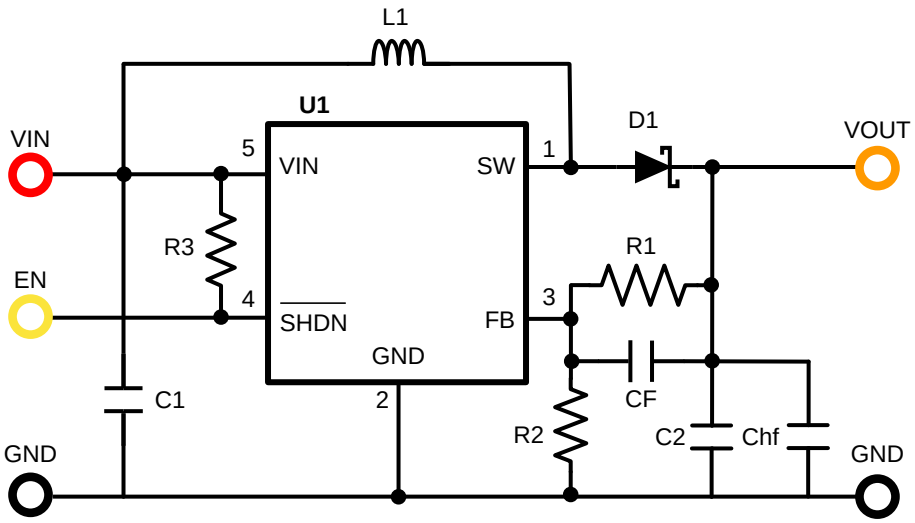

Figure 2. LMR62014 Demo Board Schematic

Table 1. Bill of Materials LMR62014

ID	Part Number	Type	Size	Parameters	Qty	Vendor
U1	LMR62014	Boost Regulator	SOT-23		1	Texas Instruments
L1	NR6045T100M	Inductor	SMD	10uH, 2.5A, 0.061 ohm,	1	Sumida
D1	CRS08	Diode	S-Flat	Schottky, 30V, 1.5A	1	Toshiba
C1	GRM21BR71C225KA12L	Capacitor	0805	Ceramic, 2.2uF, 16V, X7R	1	Murata
C2	GRM32ER71H475KA88L	Capacitor	1210	Ceramic, 4.7uF, 50V, X7R	1	Murata
CF	C0603C221J5GACTU	Capacitor	0603	Ceramic, 220pF, 50V, C0G/NP0	1	Kemet
CHF	GRM188R71H223KA01D	Capacitor	0603	Ceramic, 0.022uF, 50V, X7R	1	Murata
R1	CRCW0603115KFKEA	Resistor	0603	115 kΩ	1	Vishay
R2	CRCW060313K3FKEA	Resistor	0603	13.3 kΩ	1	Vishay
R3	CRCW06031M00JNEA	Resistor	0603	1.0 MegΩ	1	Vishay
EN	5014	Test Point Loop		Yellow	1	Keystone
VIN	5010	Test Point Loop		Red	1	Keystone
VOUT	5013	Test Point Loop		Orange	1	Keystone
GND	5011	Test Point Loop		Black	2	Keystone

Copyright © 2011–2013, Texas Instruments Incorporated

7 LMR64010 Demo Board Schematic

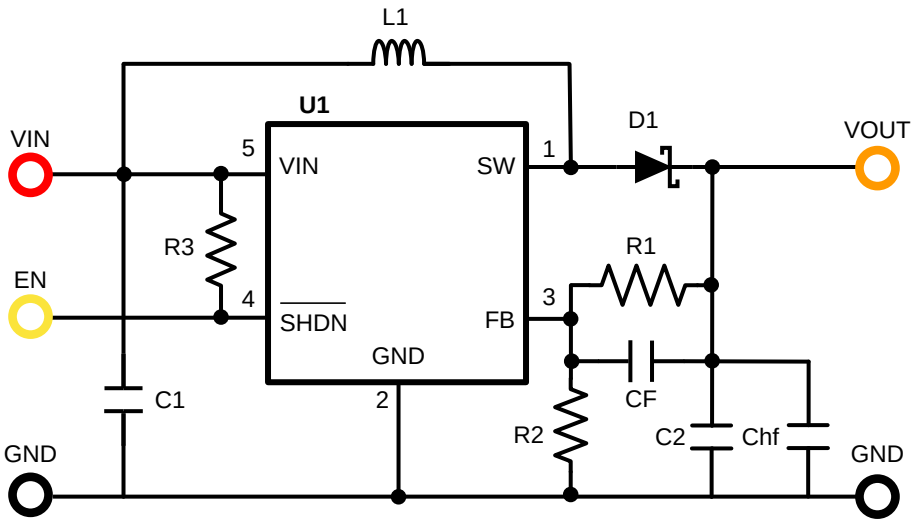

Figure 3. LMR64010 Demo Board Schematic

Table 2. Bill of Materials LMR64010

ID	Part Number	Type	Size	Parameters	Qty	Vendor
U1	LMR64010	Boost Regulator	SOT-23		1	Texas Instruments
L1	NR6045T100M	Inductor	SMD	10uH, 2.5A, 0.061 ohm,	1	Sumida
D1	CRS04	Diode	S-Flat	Schottky, 40V, 1.0A	1	Toshiba
C1	GRM21BR71C225KA12L	Capacitor	0805	Ceramic, 2.2uF, 16V, X7R	1	Murata
C2	GRM32ER71H475KA88L	Capacitor	1210	Ceramic, 4.7uF, 50V, X7R	1	Murata
CF	C0603C121J5GACTU	Capacitor	0603	Ceramic, 120pF, 50V, C0G/NP0	1	Kemet
CHF	GRM188R71H223KA01D	Capacitor	0603	Ceramic, 0.022uF, 50V, X7R	1	Murata
R1	CRCW0603243KFKEA	Resistor	0603	243 kΩ	1	Vishay
R2	CRCW060313K3FKEA	Resistor	0603	13.3 kΩ	1	Vishay
R3	CRCW06031M00JNEA	Resistor	0603	1.0 MegΩ	1	Vishay
EN	5014	Test Point Loop		Yellow	1	Keystone
VIN	5010	Test Point Loop		Red	1	Keystone
VOUT	5013	Test Point Loop		Orange	1	Keystone
GND	5011	Test Point Loop		Black	2	Keystone

Copyright © 2011–2013, Texas Instruments Incorporated

8 Quick Setup Procedures

8.1 LMR62014

Step 1: Connect a power supply to VIN terminals

Step 2: Connect a load to VOUT terminals

Step 3: EN terminal should be left floating for normal operation. Short this to ground to shutdown the part

Step 4: Set VIN = 5V, with 0A load applied, check VOUT with a voltmeter. Nominal 11.9V

Step 5: Apply a 450mA load and check VOUT. Nominal 11.9V

8.2 LMR64010

Step 1: Connect a power supply to VIN terminals

Step 2: Connect a load to VOUT terminals

Step 3: EN terminal should be left floating for normal operation. Short this to ground to shutdown the part

Step 4: Set VIN = 5V, with 0A load applied, check VOUT with a voltmeter. Nominal 23.7V

Step 5: Apply a 125mA load and check VOUT. Nominal 23.5V

9 Measurements

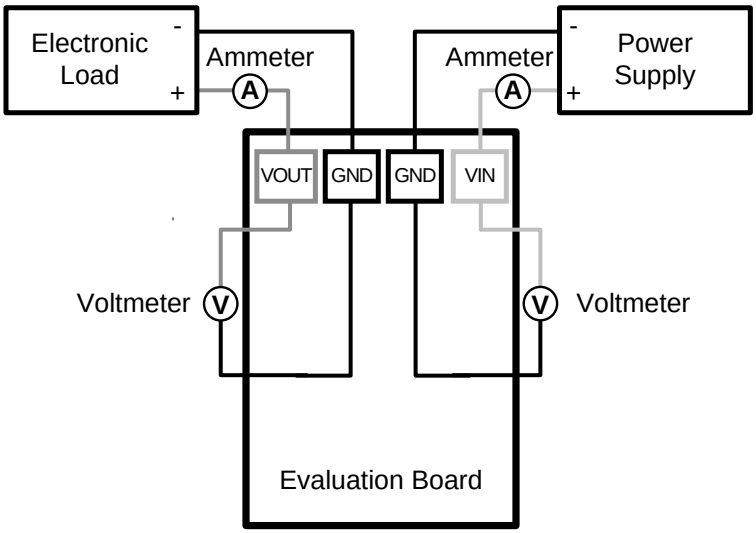

Figure 4. Efficiency Measurements

Copyright © 2011–2013, Texas Instruments Incorporated

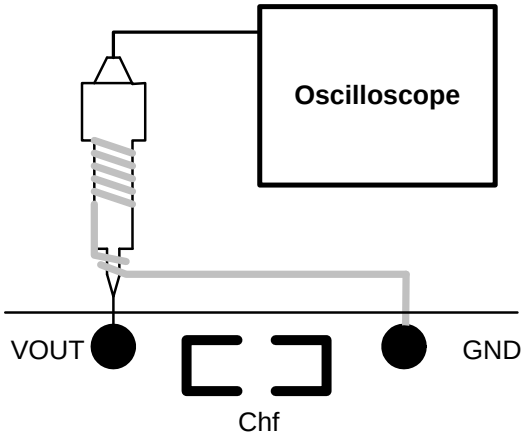

Figure 5. Voltage Ripple Measurements

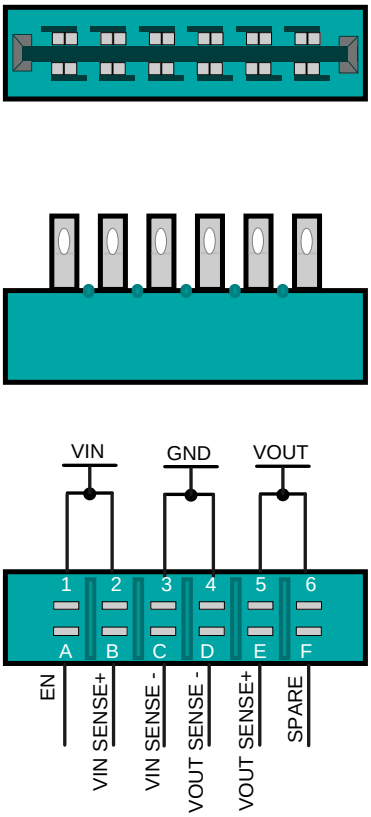

Figure 6. Edge Connector Schematic

Copyright © 2011–2013, Texas Instruments Incorporated

10 Typical Performance Characteristics

Efficiency vs. Load Current LMR62014, VOUT = 12V

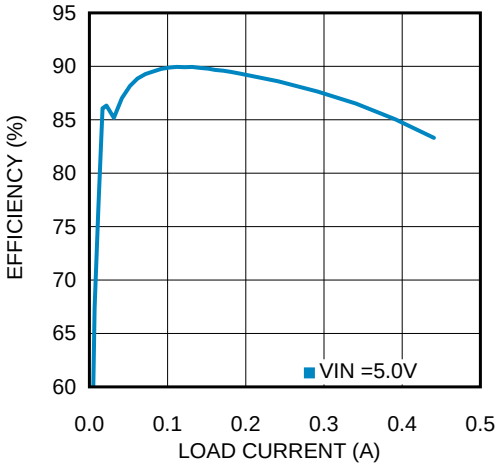

Efficiency vs. Load Current LMR62014, VOUT = 12V

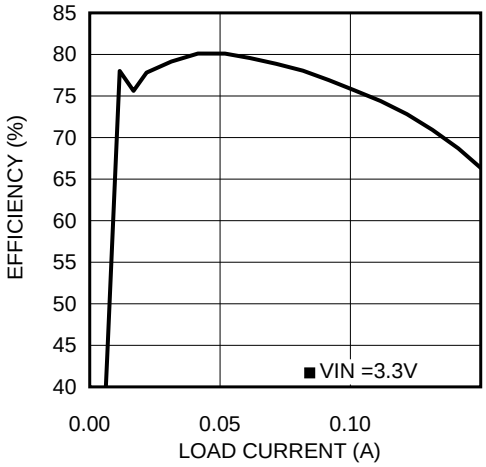

Efficiency vs. Load Current LMR64010, VOUT = 24V

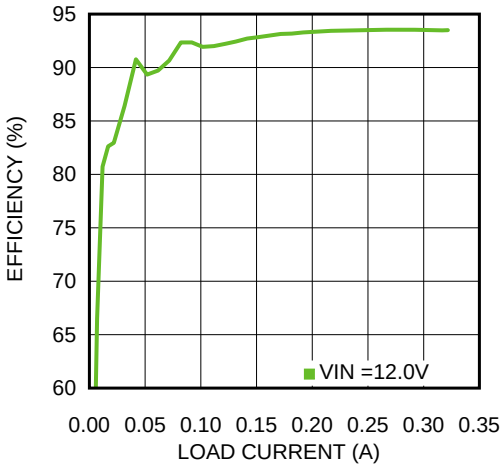

Efficiency vs. Load Current LMR64010, VOUT = 24V

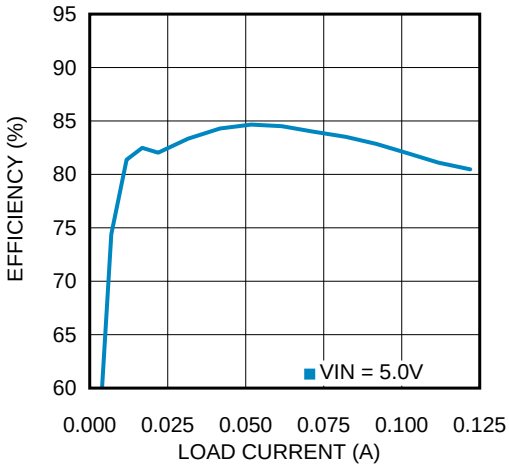

Copyright © 2011–2013, Texas Instruments Incorporated

Load Transient Waveforms LMR62014
IOUT = 33 to 330mA

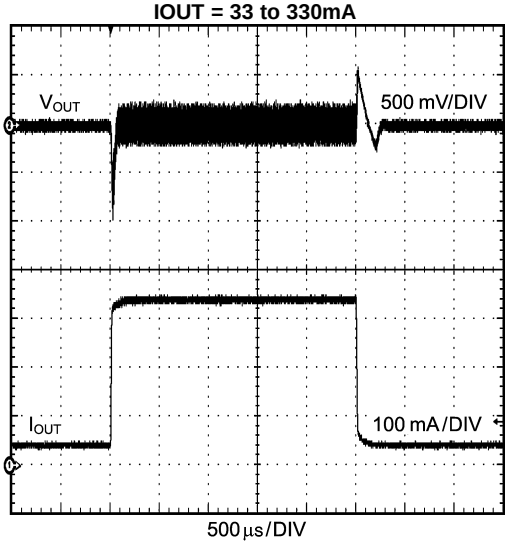

Load Transient Waveforms LMR64010
IOUT = 13 to 125mA

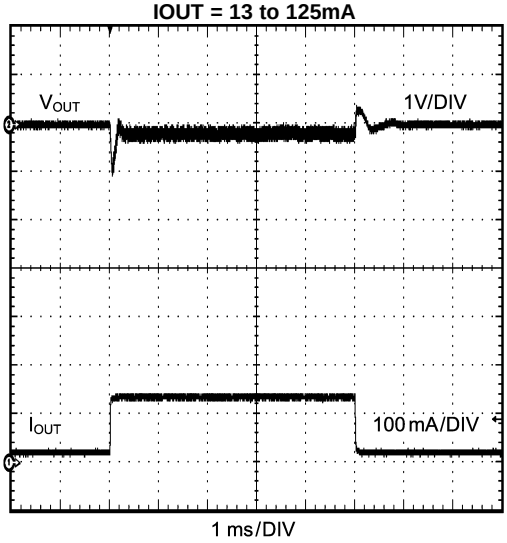

Switching Node and Output Voltage Waveforms LMR62014

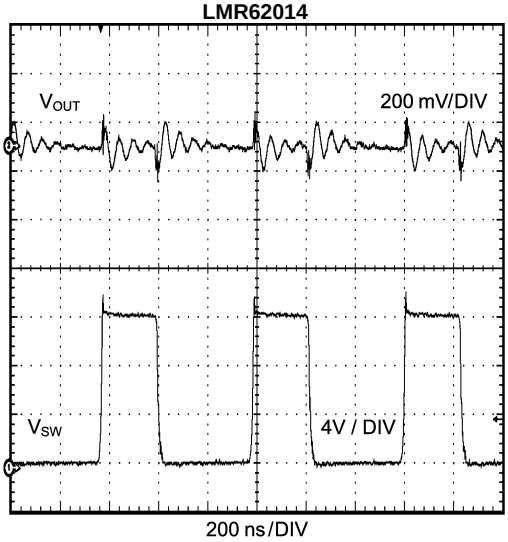

Switching Node and Output Voltage Waveforms LMR64010

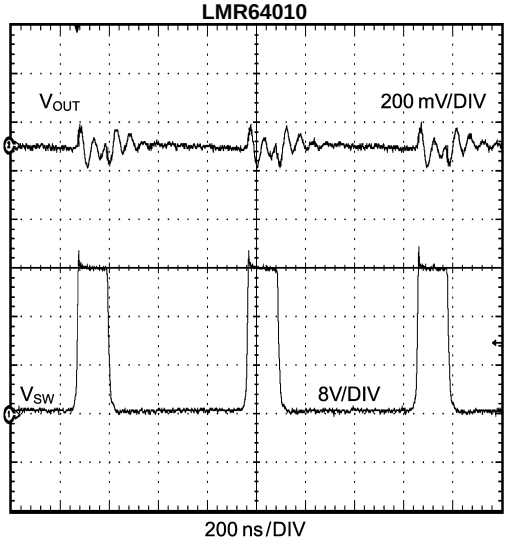

Copyright © 2011–2013, Texas Instruments Incorporated

Startup Waveform

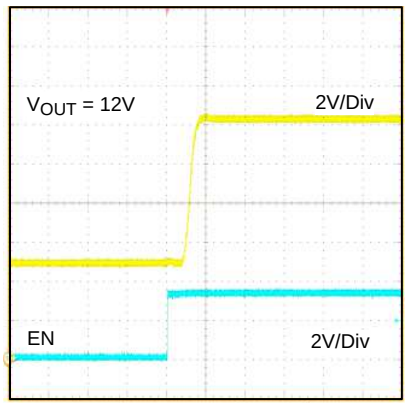

200 μs/DIV

Copyright © 2011–2013, Texas Instruments Incorporated

11 Layout

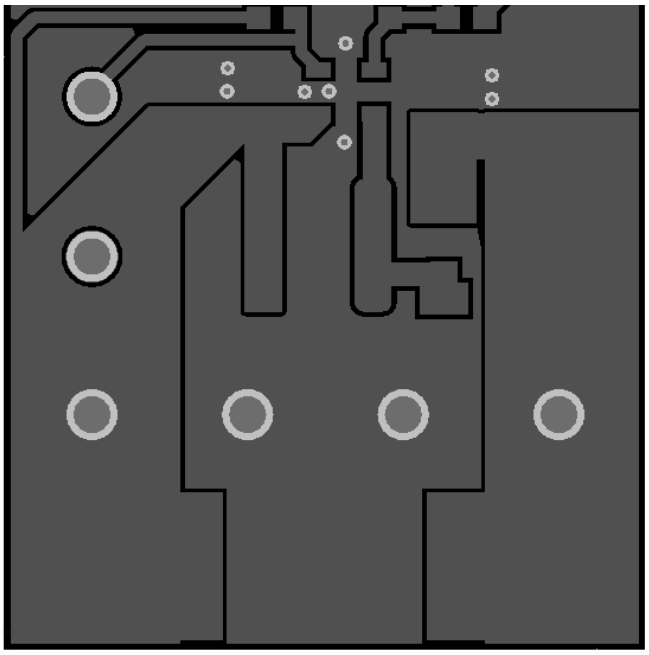

Figure 7. Top Layer

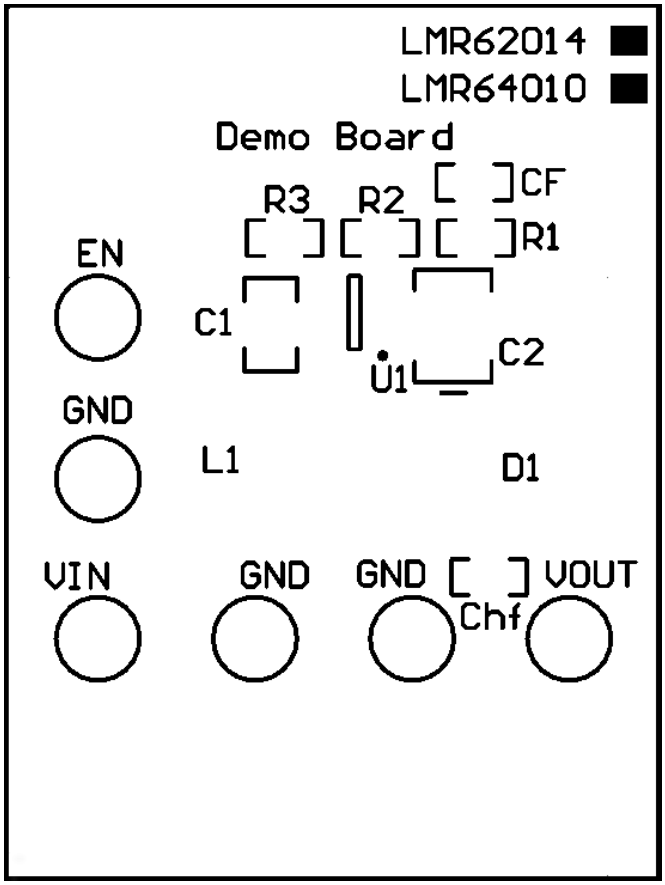

Figure 8. Top Overlay

Copyright © 2011–2013, Texas Instruments Incorporated

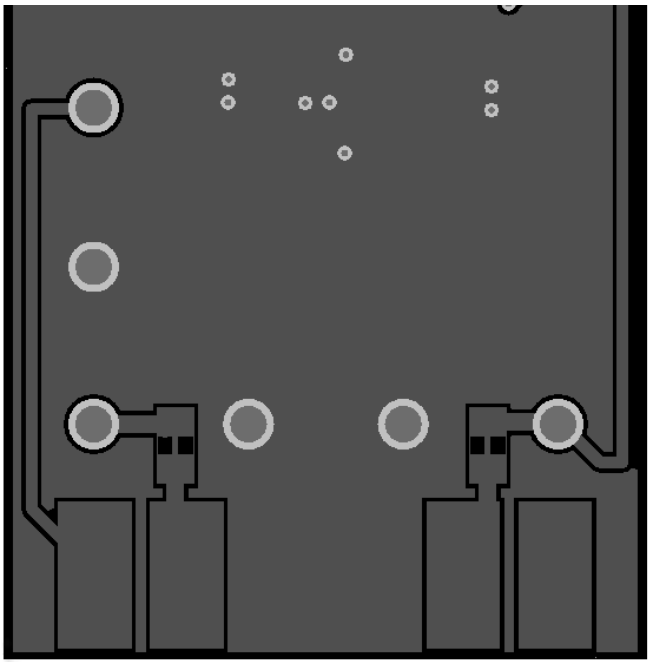

Figure 9. Bottom Layer

Figure 10. Bottom Overlay

Copyright © 2011–2013, Texas Instruments Incorporated

IMPORTANT NOTICE

Texas Instruments Incorporated and its subsidiaries (TI) reserve the right to make corrections, enhancements, improvements and other changes to its semiconductor products and services per JESD46, latest issue, and to discontinue any product or service per JESD48, latest issue. Buyers should obtain the latest relevant information before placing orders and should verify that such information is current and complete. All semiconductor products (also referred to herein as “components”) are sold subject to TI’s terms and conditions of sale supplied at the time of order acknowledgment.

TI warrants performance of its components to the specifications applicable at the time of sale, in accordance with the warranty in TI’s terms and conditions of sale of semiconductor products. Testing and other quality control techniques are used to the extent TI deems necessary to support this warranty. Except where mandated by applicable law, testing of all parameters of each component is not necessarily performed.

TI assumes no liability for applications assistance or the design of Buyers’ products. Buyers are responsible for their products and applications using TI components. To minimize the risks associated with Buyers’ products and applications, Buyers should provide adequate design and operating safeguards.

TI does not warrant or represent that any license, either express or implied, is granted under any patent right, copyright, mask work right, or other intellectual property right relating to any combination, machine, or process in which TI components or services are used. Information published by TI regarding third-party products or services does not constitute a license to use such products or services or a warranty or endorsement thereof. Use of such information may require a license from a third party under the patents or other intellectual property of the third party, or a license from TI under the patents or other intellectual property of TI.

Reproduction of significant portions of TI information in TI data books or data sheets is permissible only if reproduction is without alteration and is accompanied by all associated warranties, conditions, limitations, and notices. TI is not responsible or liable for such altered documentation. Information of third parties may be subject to additional restrictions.

Resale of TI components or services with statements different from or beyond the parameters stated by TI for that component or service voids all express and any implied warranties for the associated TI component or service and is an unfair and deceptive business practice. TI is not responsible or liable for any such statements.

Buyer acknowledges and agrees that it is solely responsible for compliance with all legal, regulatory and safety-related requirements concerning its products, and any use of TI components in its applications, notwithstanding any applications-related information or support that may be provided by TI. Buyer represents and agrees that it has all the necessary expertise to create and implement safeguards which anticipate dangerous consequences of failures, monitor failures and their consequences, lessen the likelihood of failures that might cause harm and take appropriate remedial actions. Buyer will fully indemnify TI and its representatives against any damages arising out of the use of any TI components in safety-critical applications.

In some cases, TI components may be promoted specifically to facilitate safety-related applications. With such components, TI’s goal is to help enable customers to design and create their own end-product solutions that meet applicable functional safety standards and requirements. Nonetheless, such components are subject to these terms.

No TI components are authorized for use in FDA Class III (or similar life-critical medical equipment) unless authorized officers of the parties have executed a special agreement specifically governing such use.

Only those TI components which TI has specifically designated as military grade or “enhanced plastic” are designed and intended for use in military/aerospace applications or environments. Buyer acknowledges and agrees that any military or aerospace use of TI components which have ***not*** been so designated is solely at the Buyer's risk, and that Buyer is solely responsible for compliance with all legal and regulatory requirements in connection with such use.

TI has specifically designated certain components as meeting ISO/TS16949 requirements, mainly for automotive use. In any case of use of non-designated products, TI will not be responsible for any failure to meet ISO/TS16949.

Products		**Applications**	
Audio	www.ti.com/audio	Automotive and Transportation	www.ti.com/automotive
Amplifiers	amplifier.ti.com	Communications and Telecom	www.ti.com/communications
Data Converters	dataconverter.ti.com	Computers and Peripherals	www.ti.com/computers
DLP® Products	www.dlp.com	Consumer Electronics	www.ti.com/consumer-apps
DSP	dsp.ti.com	Energy and Lighting	www.ti.com/energy
Clocks and Timers	www.ti.com/clocks	Industrial	www.ti.com/industrial
Interface	interface.ti.com	Medical	www.ti.com/medical
Logic	logic.ti.com	Security	www.ti.com/security
Power Mgmt	power.ti.com	Space, Avionics and Defense	www.ti.com/space-avionics-defense
Microcontrollers	microcontroller.ti.com	Video and Imaging	www.ti.com/video
RFID	www.ti-rfid.com		
OMAP Applications Processors	www.ti.com/omap	**TI E2E Community**	e2e.ti.com
Wireless Connectivity	www.ti.com/wirelessconnectivity		

Mailing Address: Texas Instruments, Post Office Box 655303, Dallas, Texas 75265
Copyright © 2013, Texas Instruments Incorporated