SCLS085E − DECEMBER 1982 − REVISED NOVEMBER 2004

- **Wide Operating Voltage Range of 2 V to 6 V**
- **Outputs Can Drive Up To 10 LSTTL Loads**
- **Low Power Consumption, 20-μA Max I_{CC}**
- **Typical t_{pd} = 11 ns**
- **±4-mA Output Drive at 5 V**
- **Low Input Current of 1 μA Max**

SN54HC14 . . . J OR W PACKAGE
SN74HC14 . . . D, DB, N, NS, OR PW PACKAGE
(TOP VIEW)

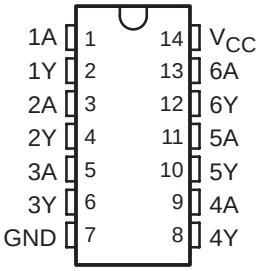

SN54HC14 . . . FK PACKAGE
(TOP VIEW)

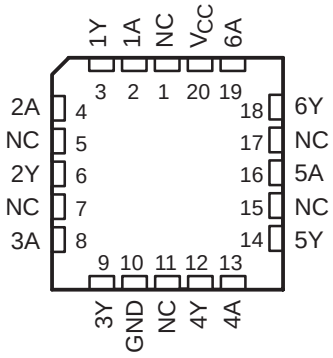

NC − No internal connection

description/ordering information

These Schmitt-trigger devices contain six independent inverters. They perform the Boolean function $Y = \overline{A}$ in positive logic.

Datasheet.Directory

ORDERING INFORMATION

T_A	PACKAGE†		ORDERABLE PART NUMBER	TOP-SIDE MARKING
−40°C to 85°C	PDIP − N	Tube of 25	SN74HC14N	SN74HC14N
	SOIC − D	Tube of 50	SN74HC14D	HC14
		Reel of 2500	SN74HC14DR	
		Reel of 250	SN74HC14DT	
	SOP − NS	Reel of 2000	SN74HC14NSR	HC14
	SSOP − DB	Reel of 2000	SN74HC14DBR	HC14
	TSSOP − PW	Tube of 90	SN74HC14PW	HC14
		Reel of 2000	SN74HC14PWR	
		Reel of 250	SN74HC14PWT	
−55°C to 125°C	CDIP − J	Tube	SNJ54HC14J	SNJ54HC14J
	CFP − W	Tube	SNJ54HC14W	SNJ54HC14W
	LCCC − FK	Tube	SNJ54HC14FK	SNJ54HC14FK

† Package drawings, standard packing quantities, thermal data, symbolization, and PCB design guidelines are available at www.ti.com/sc/package.

Please be aware that an important notice concerning availability, standard warranty, and use in critical applications of Texas Instruments semiconductor products and disclaimers thereto appears at the end of this data sheet.

PRODUCTION DATA information is current as of publication date. Products conform to specifications per the terms of Texas Instruments standard warranty. Production processing does not necessarily include testing of all parameters.

Copyright © 2004, Texas Instruments Incorporated
On products compliant to MIL-PRF-38535, all parameters are tested unless otherwise noted. On all other products, production processing does not necessarily include testing of all parameters.

FUNCTION TABLE
(each inverter)

INPUT A	OUTPUT Y
H	L
L	H

logic diagram (positive logic)

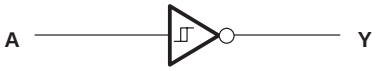

absolute maximum ratings over operating free-air temperature range (unless otherwise noted)†

Supply voltage range, V_{CC} . . . . . −0.5 V to 7 V
Input clamp current, I_{IK} ($V_I < 0$ or $V_I > V_{CC}$) (see Note 1) . . . . . ±20 mA
Output clamp current, I_{OK} ($V_O < 0$ or $V_O > V_{CC}$) (see Note 1) . . . . . ±20 mA
Continuous output current, I_O (V_O = 0 to V_{CC}) . . . . . ±25 mA
Continuous current through V_{CC} or GND . . . . . ±50 mA
Package thermal impedance, θ_{JA} (see Note 2): D package . . . . . 86°C/W
DB package . . . . . 96°C/W
N package . . . . . 80°C/W
NS package . . . . . 76°C/W
PW package . . . . . 113°C/W
Storage temperature range, T_{stg} . . . . . −65°C to 150°C

† Stresses beyond those listed under “absolute maximum ratings” may cause permanent damage to the device. These are stress ratings only, and functional operation of the device at these or any other conditions beyond those indicated under “recommended operating conditions” is not implied. Exposure to absolute-maximum-rated conditions for extended periods may affect device reliability.

NOTES: 1. The input and output voltage ratings may be exceeded if the input and output current ratings are observed.
2. The package thermal impedance is calculated in accordance with JESD 51-7.

recommended operating conditions (see Note 3)

		SN54HC14			SN74HC14			UNIT
		MIN	NOM	MAX	MIN	NOM	MAX	
V_{CC}	Supply voltage	2	5	6	2	5	6	V
V_I	Input voltage	0		V_{CC}	0		V_{CC}	V
V_O	Output voltage	0		V_{CC}	0		V_{CC}	V
T_A	Operating free-air temperature	−55		125	−40		85	°C

NOTE 3: All unused inputs of the device must be held at V_{CC} or GND to ensure proper device operation. Refer to the TI application report, *Implications of Slow or Floating CMOS Inputs*, literature number SCBA004.

electrical characteristics over recommended operating free-air temperature range (unless otherwise noted)

PARAMETER	TEST CONDITIONS		V_{CC}	T_A = 25°C			SN54HC14		SN74HC14		UNIT
				MIN	TYP	MAX	MIN	MAX	MIN	MAX	
V_{T+}			2 V	0.7	1.2	1.5	0.7	1.5	0.7	1.5	V
			4.5 V	1.55	2.5	3.15	1.55	3.15	1.55	3.15	
			6 V	2.1	3.3	4.2	2.1	4.2	2.1	4.2	
V_{T-}			2 V	0.3	0.6	1	0.3	1	0.3	1	V
			4.5 V	0.9	1.6	2.45	0.9	2.45	0.9	2.45	
			6 V	1.2	2	3.2	1.2	3.2	1.2	3.2	
$V_{T+} - V_{T-}$			2 V	0.2	0.6	1.2	0.2	1.2	0.2	1.2	V
			4.5 V	0.4	0.9	2.1	0.4	2.1	0.4	2.1	
			6 V	0.5	1.3	2.5	0.5	2.5	0.5	2.5	
V_{OH}	$V_I = V_{IH}$ or V_{IL}	I_{OH} = −20 μA	2 V	1.9	1.998		1.9		1.9		V
			4.5 V	4.4	4.499		4.4		4.4		
			6 V	5.9	5.999		5.9		5.9		
		I_{OH} = −4 mA	4.5 V	3.98	4.3		3.7		3.84		
		I_{OH} = −5.2 mA	6 V	5.48	5.8		5.2		5.34		
V_{OL}	$V_I = V_{IH}$ or V_{IL}	I_{OL} = 20 μA	2 V		0.002	0.1		0.1		0.1	V
			4.5 V		0.001	0.1		0.1		0.1	
			6 V		0.001	0.1		0.1		0.1	
		I_{OL} = 4 mA	4.5 V		0.17	0.26		0.4		0.33	
		I_{OL} = 5.2 mA	6 V		0.15	0.26		0.4		0.33	
I_I	$V_I = V_{CC}$ or 0		6 V		±0.1	±100		±1000		±1000	nA
I_{CC}	$V_I = V_{CC}$ or 0,	I_O = 0	6 V			2		40		20	μA
C_i			2 V to 6 V		3	10		10		10	pF

switching characteristics over recommended operating free-air temperature range, C_L = 50 pF (unless otherwise noted) (see Figure 1)

PARAMETER	FROM (INPUT)	TO (OUTPUT)	V_{CC}	T_A = 25°C			SN54HC14		SN74HC14		UNIT
				MIN	TYP	MAX	MIN	MAX	MIN	MAX	
t_{pd}	A	Y	2 V		55	125		190		155	ns
			4.5 V		12	25		38		31	
			6 V		11	21		32		26	
t_t		Y	2 V		38	75		110		95	ns
			4.5 V		8	15		22		19	
			6 V		6	13		19		16	

operating characteristics, T_A = 25°C

PARAMETER		TEST CONDITIONS	TYP	UNIT
C_{pd}	Power dissipation capacitance per inverter	No load	20	pF

PARAMETER MEASUREMENT INFORMATION

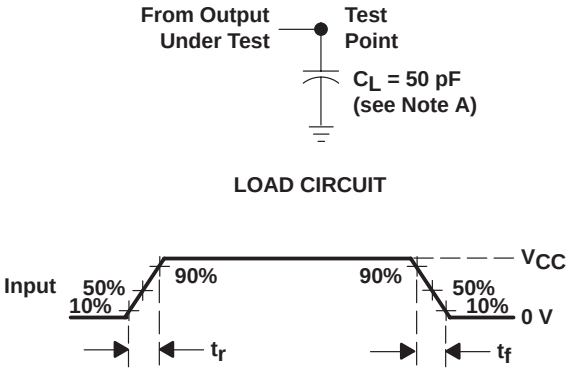

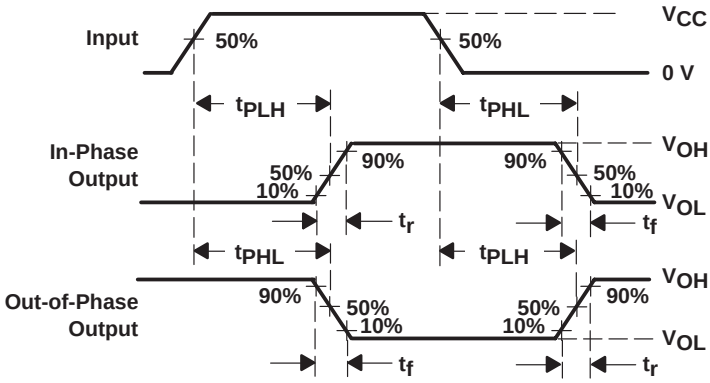

NOTES: A. C_L includes probe and test-fixture capacitance.
B. Phase relationships between waveforms were chosen arbitrarily. All input pulses are supplied by generators having the following characteristics: PRR ≤ 1 MHz, Z_O = 50 Ω, t_r = 6 ns, t_f = 6 ns.
C. The outputs are measured one at a time, with one input transition per measurement.
D. t_{PLH} and t_{PHL} are the same as t_{pd}.

Figure 1. Load Circuit and Voltage Waveforms

PACKAGING INFORMATION

Orderable Device	Status (1)	Package Type	Package Drawing	Pins	Package Qty	Eco Plan (2)	Lead/Ball Finish	MSL Peak Temp (3)
5962-8409101VCA	ACTIVE	CDIP	J	14	1	TBD	Call TI	Level-NC-NC-NC
5962-8409101VDA	ACTIVE	CFP	W	14	1	TBD	Call TI	Level-NC-NC-NC
84091012A	ACTIVE	LCCC	FK	20	1	TBD	Call TI	Level-NC-NC-NC
8409101CA	ACTIVE	CDIP	J	14	1	TBD	Call TI	Level-NC-NC-NC
8409101DA	ACTIVE	CFP	W	14	1	TBD	Call TI	Level-NC-NC-NC
JM38510/65702BCA	ACTIVE	CDIP	J	14	1	TBD	Call TI	Level-NC-NC-NC
JM38510/65702BDA	ACTIVE	CFP	W	14	1	TBD	Call TI	Level-NC-NC-NC
SN54HC14J	ACTIVE	CDIP	J	14	1	TBD	Call TI	Level-NC-NC-NC
SN74HC14D	ACTIVE	SOIC	D	14	50	Pb-Free (RoHS)	CU NIPDAU	Level-2-260C-1 YEAR/ Level-1-235C-UNLIM
SN74HC14DBR	ACTIVE	SSOP	DB	14	2000	Pb-Free (RoHS)	CU NIPDAU	Level-2-260C-1 YEAR/ Level-1-235C-UNLIM
SN74HC14DBRE4	ACTIVE	SSOP	DB	14	2000	Pb-Free (RoHS)	CU NIPDAU	Level-2-260C-1 YEAR/ Level-1-235C-UNLIM
SN74HC14DE4	ACTIVE	SOIC	D	14	50	Pb-Free (RoHS)	CU NIPDAU	Level-2-260C-1 YEAR/ Level-1-235C-UNLIM
SN74HC14DR	ACTIVE	SOIC	D	14	2500	Green (RoHS & no Sb/Br)	CU NIPDAU	Level-1-260C-UNLIM
SN74HC14DRE4	ACTIVE	SOIC	D	14	2500	Pb-Free (RoHS)	CU NIPDAU	Level-2-260C-1 YEAR/ Level-1-235C-UNLIM
SN74HC14DRG4	ACTIVE	SOIC	D	14	2500	Green (RoHS & no Sb/Br)	CU NIPDAU	Level-1-260C-UNLIM
SN74HC14DT	ACTIVE	SOIC	D	14	250	Pb-Free (RoHS)	CU NIPDAU	Level-2-260C-1 YEAR/ Level-1-235C-UNLIM
SN74HC14DTE4	ACTIVE	SOIC	D	14	250	Pb-Free (RoHS)	CU NIPDAU	Level-2-260C-1 YEAR/ Level-1-235C-UNLIM
SN74HC14N	ACTIVE	PDIP	N	14	25	Pb-Free (RoHS)	CU NIPDAU	Level-NC-NC-NC
SN74HC14N3	OBSOLETE	PDIP	N	14		TBD	Call TI	Call TI
SN74HC14NE4	ACTIVE	PDIP	N	14	25	Pb-Free (RoHS)	CU NIPDAU	Level-NC-NC-NC
SN74HC14NSLE	OBSOLETE	SO	NS	14		TBD	Call TI	Call TI
SN74HC14NSR	ACTIVE	SO	NS	14	2000	Pb-Free (RoHS)	CU NIPDAU	Level-2-260C-1 YEAR/ Level-1-235C-UNLIM
SN74HC14NSRE4	ACTIVE	SO	NS	14	2000	Pb-Free (RoHS)	CU NIPDAU	Level-2-260C-1 YEAR/ Level-1-235C-UNLIM
SN74HC14NSRG4	ACTIVE	SO	NS	14	2000	Green (RoHS & no Sb/Br)	CU NIPDAU	Level-1-260C-UNLIM
SN74HC14PW	ACTIVE	TSSOP	PW	14	90	Pb-Free (RoHS)	CU NIPDAU	Level-1-250C-UNLIM
SN74HC14PWE4	ACTIVE	TSSOP	PW	14	90	Pb-Free (RoHS)	CU NIPDAU	Level-1-250C-UNLIM
SN74HC14PWG4	ACTIVE	TSSOP	PW	14	90	Green (RoHS & no Sb/Br)	CU NIPDAU	Level-1-260C-UNLIM
SN74HC14PWLE	OBSOLETE	TSSOP	PW	14		TBD	Call TI	Call TI
SN74HC14PWR	ACTIVE	TSSOP	PW	14	2000	Pb-Free (RoHS)	CU NIPDAU	Level-1-250C-UNLIM

Orderable Device	Status [1]	Package Type	Package Drawing	Pins	Package Qty	Eco Plan [2]	Lead/Ball Finish	MSL Peak Temp [3]
SN74HC14PWRE4	ACTIVE	TSSOP	PW	14	2000	Pb-Free (RoHS)	CU NIPDAU	Level-1-250C-UNLIM
SN74HC14PWRG4	ACTIVE	TSSOP	PW	14	2000	Green (RoHS & no Sb/Br)	CU NIPDAU	Level-1-260C-UNLIM
SN74HC14PWT	ACTIVE	TSSOP	PW	14	250	Pb-Free (RoHS)	CU NIPDAU	Level-1-250C-UNLIM
SN74HC14PWTE4	ACTIVE	TSSOP	PW	14	250	Pb-Free (RoHS)	CU NIPDAU	Level-1-250C-UNLIM
SN74HC14PWTG4	ACTIVE	TSSOP	PW	14	250	Green (RoHS & no Sb/Br)	CU NIPDAU	Level-1-260C-UNLIM
SNJ54HC14FK	ACTIVE	LCCC	FK	20	1	TBD	Call TI	Level-NC-NC-NC
SNJ54HC14J	ACTIVE	CDIP	J	14	1	TBD	Call TI	Level-NC-NC-NC
SNJ54HC14W	ACTIVE	CFP	W	14	1	TBD	Call TI	Level-NC-NC-NC

[1] The marketing status values are defined as follows:
ACTIVE: Product device recommended for new designs.
LIFEBUY: TI has announced that the device will be discontinued, and a lifetime-buy period is in effect.
NRND: Not recommended for new designs. Device is in production to support existing customers, but TI does not recommend using this part in a new design.
PREVIEW: Device has been announced but is not in production. Samples may or may not be available.
OBSOLETE: TI has discontinued the production of the device.

[2] Eco Plan - The planned eco-friendly classification: Pb-Free (RoHS) or Green (RoHS & no Sb/Br) - please check http://www.ti.com/productcontent for the latest availability information and additional product content details.
TBD: The Pb-Free/Green conversion plan has not been defined.
Pb-Free (RoHS): TI's terms "Lead-Free" or "Pb-Free" mean semiconductor products that are compatible with the current RoHS requirements for all 6 substances, including the requirement that lead not exceed 0.1% by weight in homogeneous materials. Where designed to be soldered at high temperatures, TI Pb-Free products are suitable for use in specified lead-free processes.
Green (RoHS & no Sb/Br): TI defines "Green" to mean Pb-Free (RoHS compatible), and free of Bromine (Br) and Antimony (Sb) based flame retardants (Br or Sb do not exceed 0.1% by weight in homogeneous material)

[3] MSL, Peak Temp. -- The Moisture Sensitivity Level rating according to the JEDEC industry standard classifications, and peak solder temperature.

Important Information and Disclaimer: The information provided on this page represents TI's knowledge and belief as of the date that it is provided. TI bases its knowledge and belief on information provided by third parties, and makes no representation or warranty as to the accuracy of such information. Efforts are underway to better integrate information from third parties. TI has taken and continues to take reasonable steps to provide representative and accurate information but may not have conducted destructive testing or chemical analysis on incoming materials and chemicals. TI and TI suppliers consider certain information to be proprietary, and thus CAS numbers and other limited information may not be available for release.

In no event shall TI's liability arising out of such information exceed the total purchase price of the TI part(s) at issue in this document sold by TI to Customer on an annual basis.

J (R–GDIP–T**)

14 LEADS SHOWN

CERAMIC DUAL IN–LINE PACKAGE

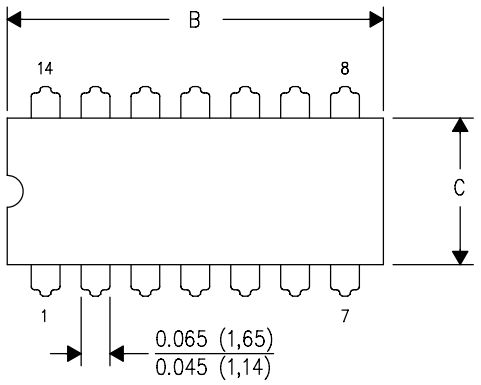

DIM \ PINS **	14	16	18	20
A	0.300 (7,62) BSC	0.300 (7,62) BSC	0.300 (7,62) BSC	0.300 (7,62) BSC
B MAX	0.785 (19,94)	.840 (21,34)	0.960 (24,38)	1.060 (26,92)
B MIN	—	—	—	—
C MAX	0.300 (7,62)	0.300 (7,62)	0.310 (7,87)	0.300 (7,62)
C MIN	0.245 (6,22)	0.245 (6,22)	0.220 (5,59)	0.245 (6,22)

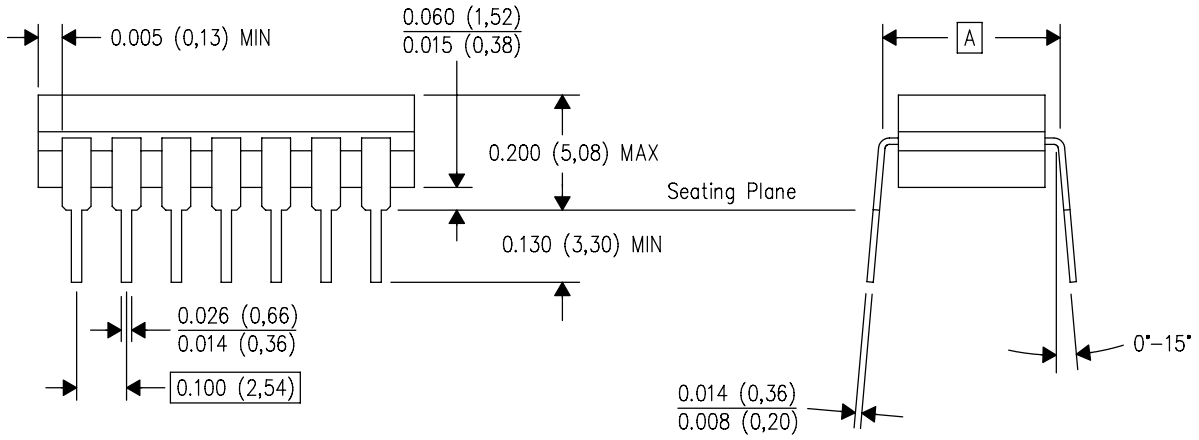

4040083/F 03/03

NOTES:
A. All linear dimensions are in inches (millimeters).
B. This drawing is subject to change without notice.
C. This package is hermetically sealed with a ceramic lid using glass frit.
D. Index point is provided on cap for terminal identification only on press ceramic glass frit seal only.
E. Falls within MIL STD 1835 GDIP1–T14, GDIP1–T16, GDIP1–T18 and GDIP1–T20.

W (R–GDFP–F14) CERAMIC DUAL FLATPACK

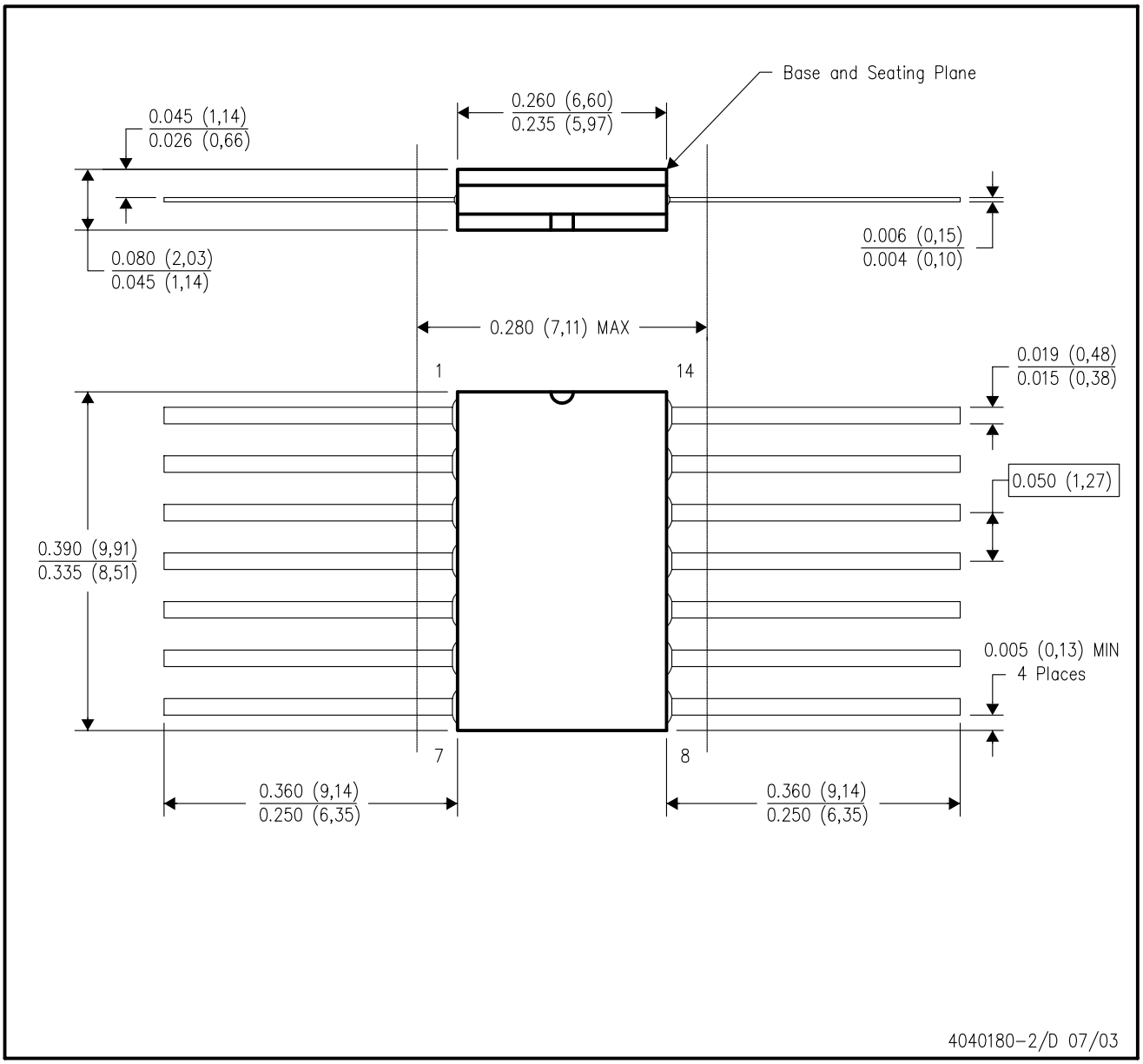

NOTES:
A. All linear dimensions are in inches (millimeters).
B. This drawing is subject to change without notice.
C. This package can be hermetically sealed with a ceramic lid using glass frit.
D. Index point is provided on cap for terminal identification only.
E. Falls within MIL STD 1835 GDFP1–F14 and JEDEC MO–092AB

FK (S-CQCC-N)** **LEADLESS CERAMIC CHIP CARRIER**

28 TERMINAL SHOWN

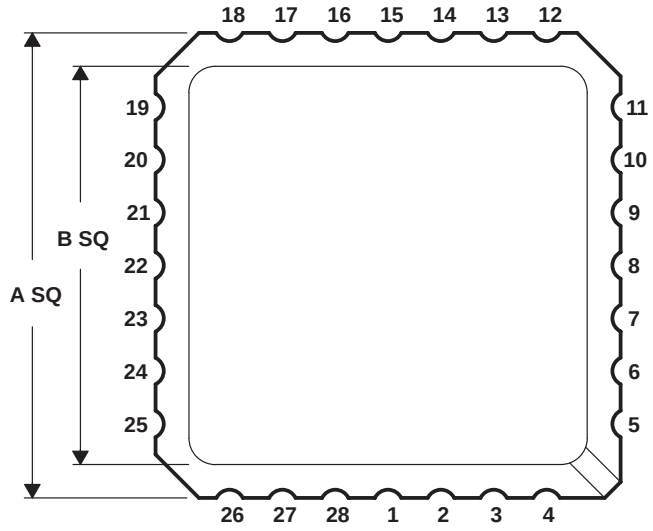

NO. OF TERMINALS **	A		B	
	MIN	MAX	MIN	MAX
20	0.342 (8,69)	0.358 (9,09)	0.307 (7,80)	0.358 (9,09)
28	0.442 (11,23)	0.458 (11,63)	0.406 (10,31)	0.458 (11,63)
44	0.640 (16,26)	0.660 (16,76)	0.495 (12,58)	0.560 (14,22)
52	0.739 (18,78)	0.761 (19,32)	0.495 (12,58)	0.560 (14,22)
68	0.938 (23,83)	0.962 (24,43)	0.850 (21,6)	0.858 (21,8)
84	1.141 (28,99)	1.165 (29,59)	1.047 (26,6)	1.063 (27,0)

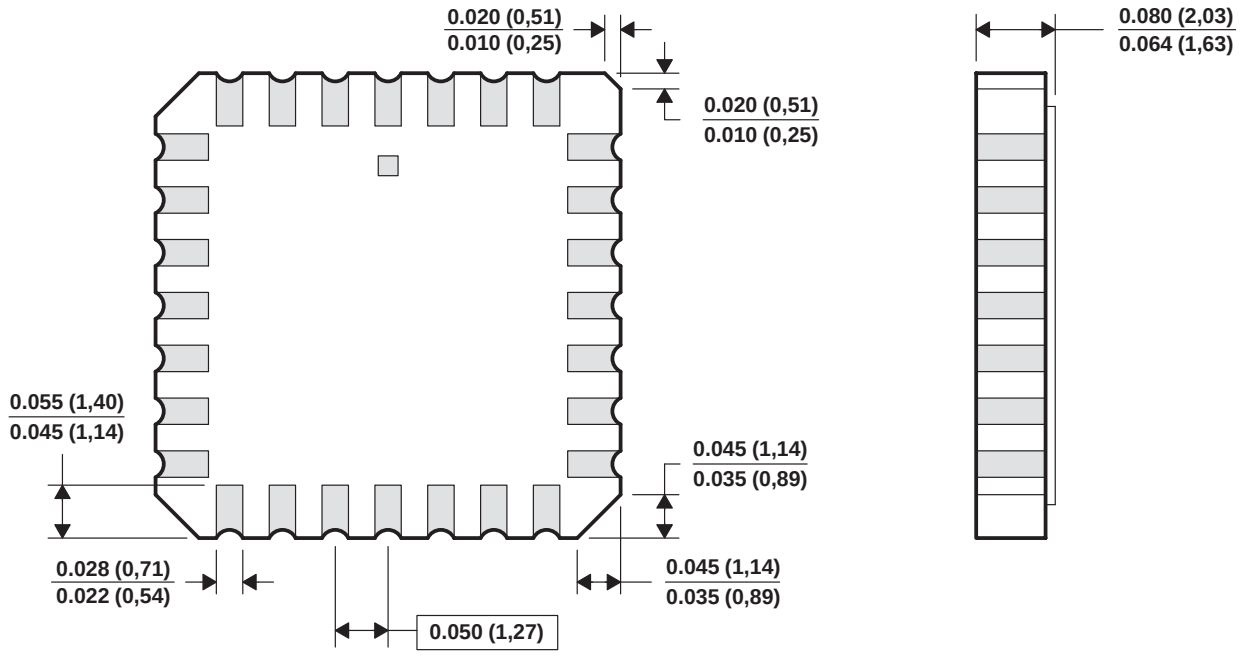

4040140/D 10/96

NOTES: A. All linear dimensions are in inches (millimeters).
B. This drawing is subject to change without notice.
C. This package can be hermetically sealed with a metal lid.
D. The terminals are gold plated.
E. Falls within JEDEC MS-004

N (R–PDIP–T**)

PLASTIC DUAL–IN–LINE PACKAGE

16 PINS SHOWN

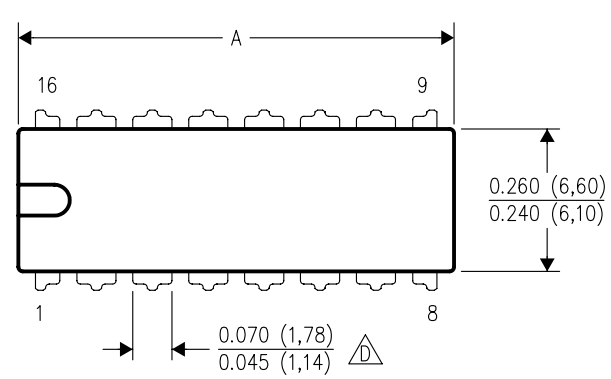

DIM \ PINS **	14	16	18	20
A MAX	0.775 (19,69)	0.775 (19,69)	0.920 (23,37)	1.060 (26,92)
A MIN	0.745 (18,92)	0.745 (18,92)	0.850 (21,59)	0.940 (23,88)
MS–001 VARIATION (C)	AA	BB	AC	AD

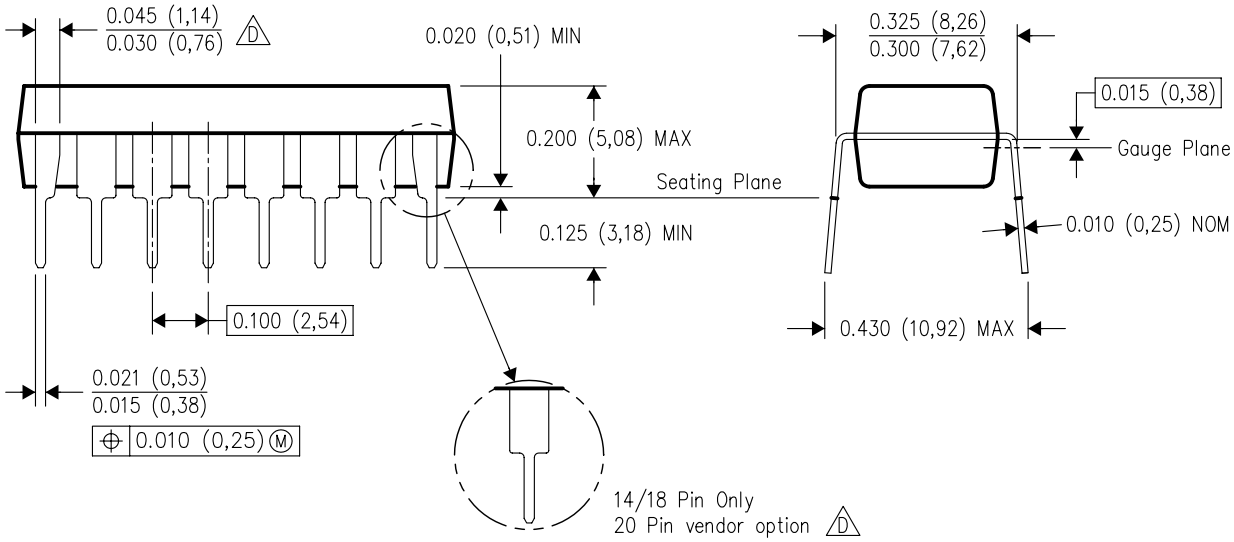

4040049/E 12/2002

NOTES:
A. All linear dimensions are in inches (millimeters).
B. This drawing is subject to change without notice.
C. Falls within JEDEC MS–001, except 18 and 20 pin minimum body length (Dim A).
D. The 20 pin end lead shoulder width is a vendor option, either half or full width.

D (R–PDSO–G14) PLASTIC SMALL–OUTLINE PACKAGE

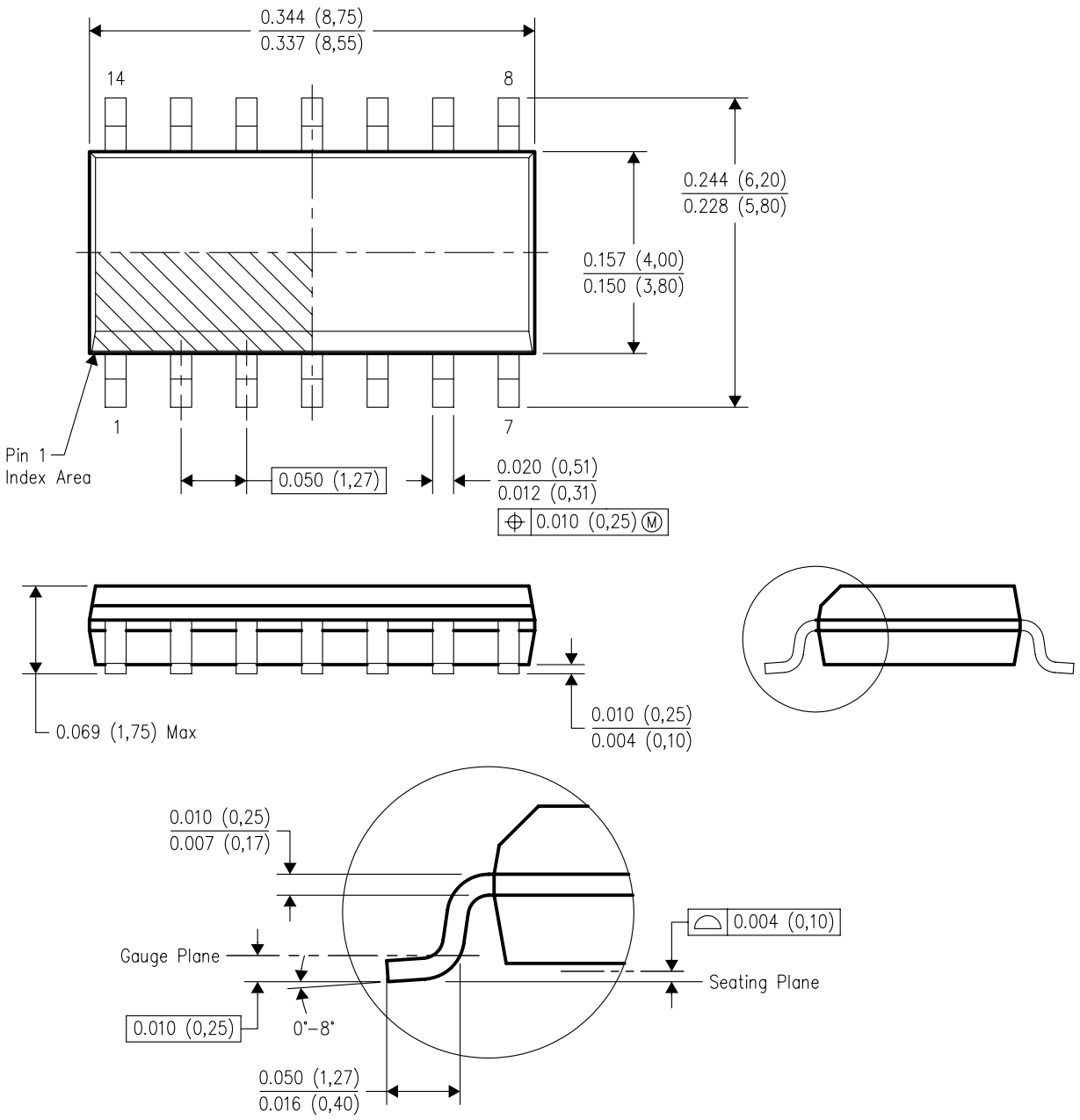

NOTES:
A. All linear dimensions are in inches (millimeters).
B. This drawing is subject to change without notice.
C. Body dimensions do not include mold flash or protrusion not to exceed 0.006 (0,15).
D. Falls within JEDEC MS–012 variation AB.

MECHANICAL DATA

NS (R-PDSO-G)** **PLASTIC SMALL-OUTLINE PACKAGE**

14-PINS SHOWN

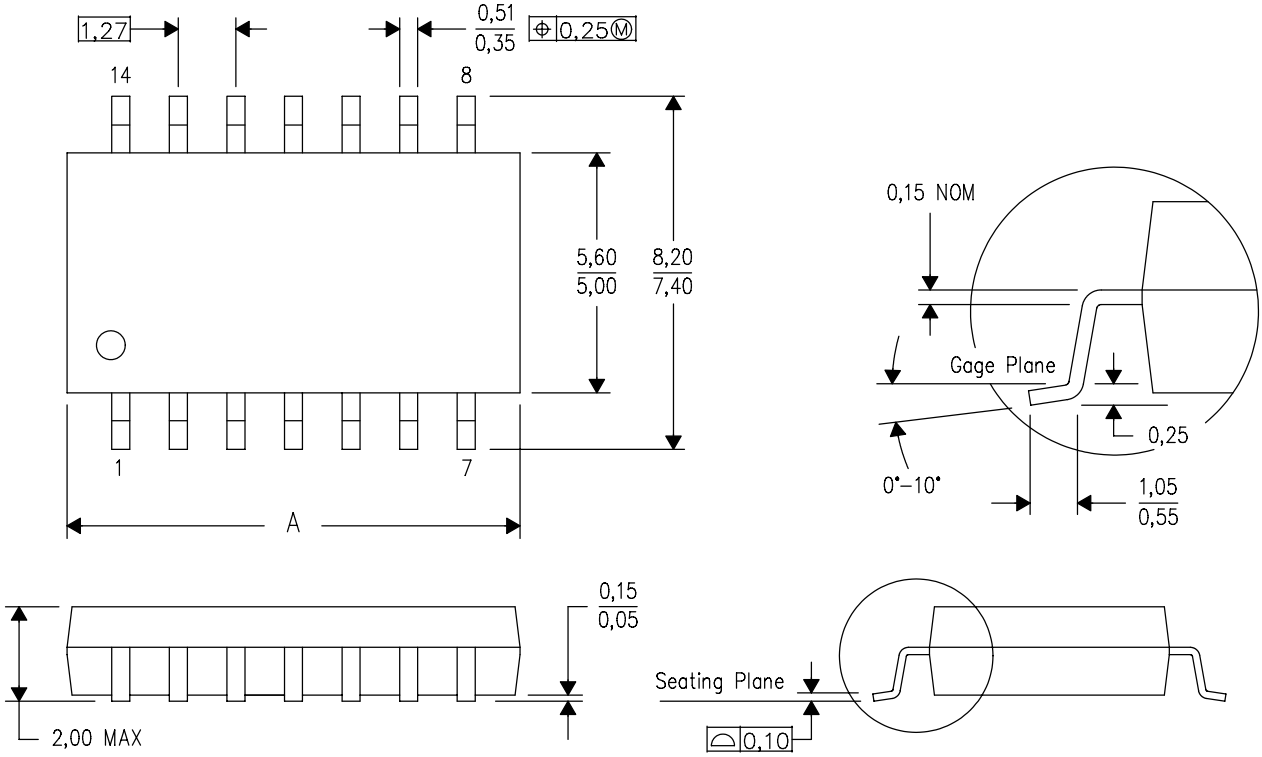

DIM \ PINS **	14	16	20	24
A MAX	10,50	10,50	12,90	15,30
A MIN	9,90	9,90	12,30	14,70

4040062/C 03/03

NOTES:
A. All linear dimensions are in millimeters.
B. This drawing is subject to change without notice.
C. Body dimensions do not include mold flash or protrusion, not to exceed 0,15.

MSSO002E – JANUARY 1995 – REVISED DECEMBER 2001

DB (R-PDSO-G)** **PLASTIC SMALL-OUTLINE**

28 PINS SHOWN

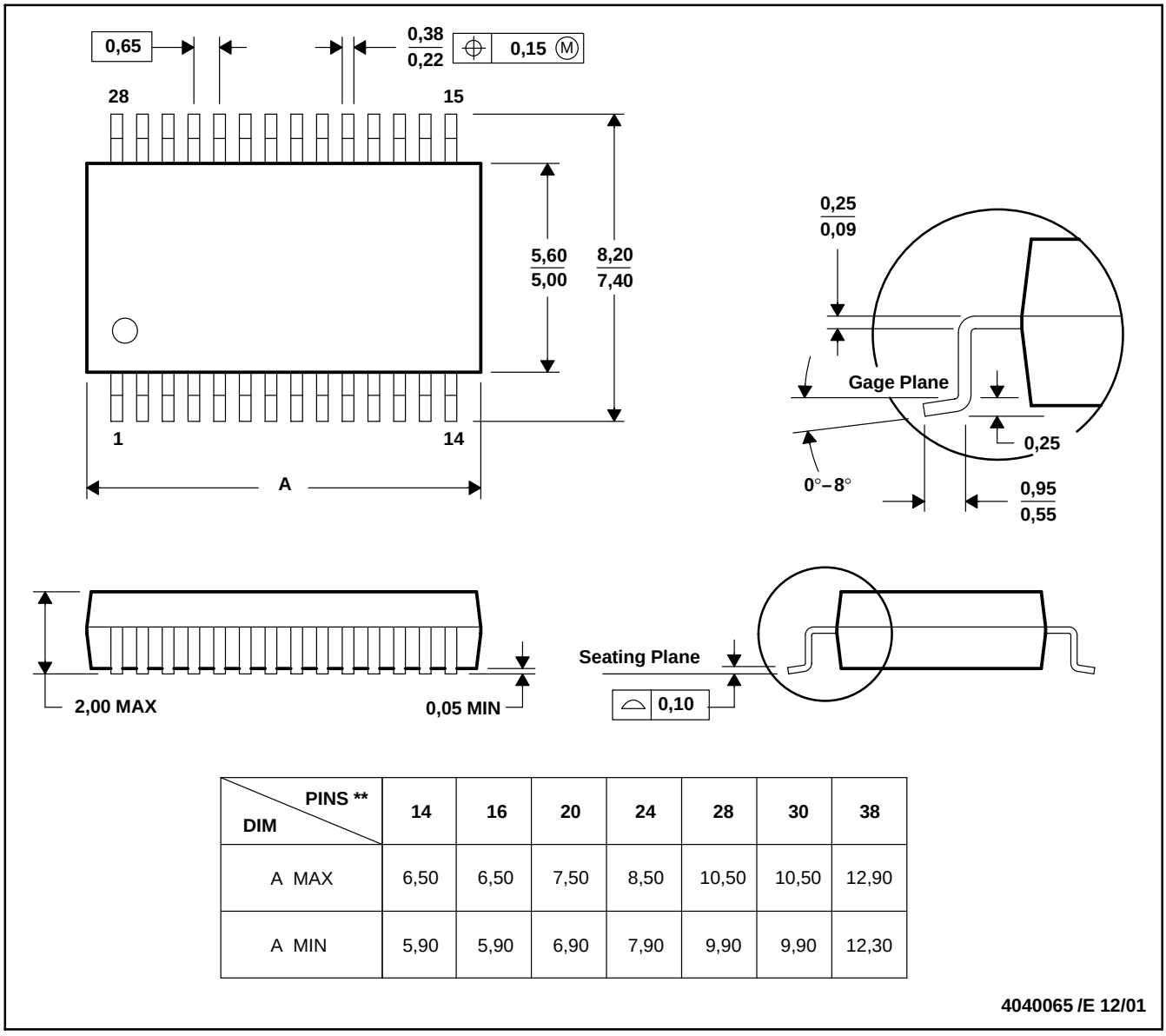

DIM \ PINS **	14	16	20	24	28	30	38
A MAX	6,50	6,50	7,50	8,50	10,50	10,50	12,90
A MIN	5,90	5,90	6,90	7,90	9,90	9,90	12,30

4040065 /E 12/01

NOTES: A. All linear dimensions are in millimeters.
B. This drawing is subject to change without notice.
C. Body dimensions do not include mold flash or protrusion not to exceed 0,15.
D. Falls within JEDEC MO-150

PW (R-PDSO-G)** **PLASTIC SMALL-OUTLINE PACKAGE**

14 PINS SHOWN

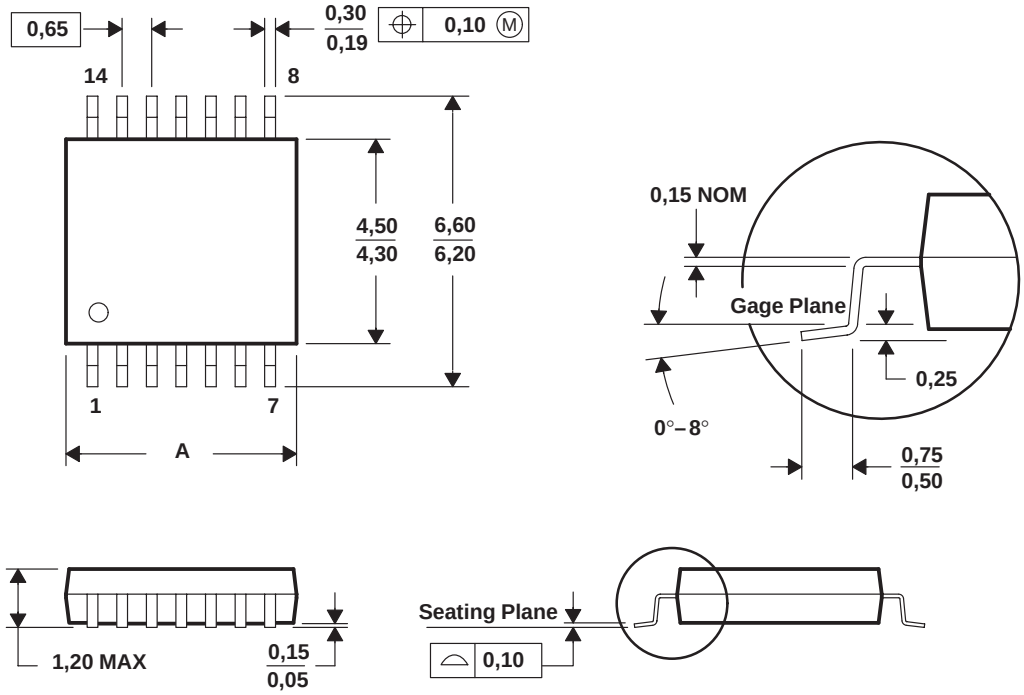

DIM \ PINS **	8	14	16	20	24	28
A MAX	3,10	5,10	5,10	6,60	7,90	9,80
A MIN	2,90	4,90	4,90	6,40	7,70	9,60

4040064/F 01/97

NOTES: A. All linear dimensions are in millimeters.
B. This drawing is subject to change without notice.
C. Body dimensions do not include mold flash or protrusion not to exceed 0,15.
D. Falls within JEDEC MO-153

IMPORTANT NOTICE

Texas Instruments Incorporated and its subsidiaries (TI) reserve the right to make corrections, modifications, enhancements, improvements, and other changes to its products and services at any time and to discontinue any product or service without notice. Customers should obtain the latest relevant information before placing orders and should verify that such information is current and complete. All products are sold subject to TI's terms and conditions of sale supplied at the time of order acknowledgment.

TI warrants performance of its hardware products to the specifications applicable at the time of sale in accordance with TI's standard warranty. Testing and other quality control techniques are used to the extent TI deems necessary to support this warranty. Except where mandated by government requirements, testing of all parameters of each product is not necessarily performed.

TI assumes no liability for applications assistance or customer product design. Customers are responsible for their products and applications using TI components. To minimize the risks associated with customer products and applications, customers should provide adequate design and operating safeguards.

TI does not warrant or represent that any license, either express or implied, is granted under any TI patent right, copyright, mask work right, or other TI intellectual property right relating to any combination, machine, or process in which TI products or services are used. Information published by TI regarding third-party products or services does not constitute a license from TI to use such products or services or a warranty or endorsement thereof. Use of such information may require a license from a third party under the patents or other intellectual property of the third party, or a license from TI under the patents or other intellectual property of TI.

Reproduction of information in TI data books or data sheets is permissible only if reproduction is without alteration and is accompanied by all associated warranties, conditions, limitations, and notices. Reproduction of this information with alteration is an unfair and deceptive business practice. TI is not responsible or liable for such altered documentation.

Resale of TI products or services with statements different from or beyond the parameters stated by TI for that product or service voids all express and any implied warranties for the associated TI product or service and is an unfair and deceptive business practice. TI is not responsible or liable for any such statements.

Following are URLs where you can obtain information on other Texas Instruments products and application solutions:

Products		**Applications**	
Amplifiers	amplifier.ti.com	Audio	www.ti.com/audio
Data Converters	dataconverter.ti.com	Automotive	www.ti.com/automotive
DSP	dsp.ti.com	Broadband	www.ti.com/broadband
Interface	interface.ti.com	Digital Control	www.ti.com/digitalcontrol
Logic	logic.ti.com	Military	www.ti.com/military
Power Mgmt	power.ti.com	Optical Networking	www.ti.com/opticalnetwork
Microcontrollers	microcontroller.ti.com	Security	www.ti.com/security
		Telephony	www.ti.com/telephony
		Video & Imaging	www.ti.com/video
		Wireless	www.ti.com/wireless

Mailing Address: Texas Instruments
Post Office Box 655303 Dallas, Texas 75265

Copyright © 2005, Texas Instruments Incorporated