FAIRCHILD SEMICONDUCTOR™

March 1999
Revised April 1999

NC7WZ17
TinyLogic™ UHS Dual Buffer with Schmitt Trigger Inputs

General Description

The NC7WZ17 is a dual buffer with Schmitt trigger inputs from Fairchild's Ultra High Speed Series of TinyLogic™ in the SC70 6-lead package. The device is fabricated with advanced CMOS technology to achieve ultra high speed with high output drive while maintaining low static power dissipation over a very broad V_{CC} operating range. The device is specified to operate over the 1.8V to 5.5V V_{CC} range. The inputs and outputs are high impedance when V_{CC} is 0V. Inputs tolerate voltages up to 7V independent of V_{CC} operating voltage. Schmitt trigger inputs typically achieve 1V hysteresis between the positive going and negative going input threshold voltage at 5V V_{CC}.

Features

- Space saving SC70 6-lead package
- Ultra High Speed: t_{PD} 3.6 ns Typ into 50 pF at 5V V_{CC}
- High Output Drive: ±24 mA at 3V V_{CC}
- Broad V_{CC} Operating Range; 1.8V to 5.5V
- Matches the performance of LCX when operated at 3.3V V_{CC}
- Power down high impedance inputs/outputs
- Overvoltage tolerant inputs facilitate 5V to 3V translation
- Patented noise/EMI reduction circuitry implemented

Ordering Code:

Datasheet Directory

Order Number	Package Number	Package Top Mark	Package Description	Supplied As
NC7WZ17P6	MAA06A	Z17	6-Lead SC70, EIAJ SC88, 1.25mm Wide	250 Units on Tape and Reel
NC7WZ17P6X	MAA06A	Z17	6-Lead SC70, EIAJ SC88, 1.25mm Wide	3k Units on Tape and Reel

Logic Symbol

IEEE/IEC

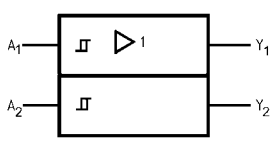

Connection Diagrams

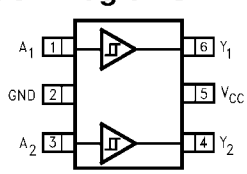

(Top View)

Pin One Orientation Diagram

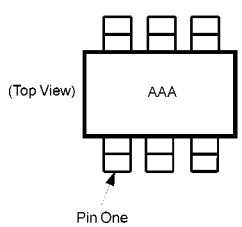

AAA represents Package Top Mark - see ordering code

Note: Orientation of Top Mark determines Pin One location. Read the Top Package Mark left to right, Pin One is the lower left pin (see diagram).

Pin Descriptions

Pin Names	Description
A_1, A_2	Data Inputs
Y_1, Y_2	Output

Function Table

Y = A

Input	Output
A	Y
L	L
H	H

H = HIGH Logic Level
L = LOW Logic Level

TinyLogic™ is a trademark of Fairchild Semiconductor Corporation.

© 1999 Fairchild Semiconductor Corporation

Absolute Maximum Ratings (Note 1)

Supply Voltage (V_{CC})	–0.5V to +7V
DC Input Voltage (V_{IN})	–0.5V to +7V
DC Output Voltage (V_{OUT})	–0.5V to +7V
DC Input Diode Current (I_{IK})	
@ V_{IN} < –0.5V	–50 mA
DC Output Diode Current (I_{OK})	
@ V_{OUT} < –0.5V	–50 mA
DC Output Current (I_{OUT})	±50 mA
DC V_{CC}/GND Current (I_{CC}/I_{GND})	±100 mA
Storage Temperature (T_{STG})	–65°C to +150°C
Junction Temperature under Bias (T_J)	150°C
Junction Lead Temperature (T_L)	
(Soldering, 10 seconds)	260°C
Power Dissipation (P_D) @ +85°C	180 mW

Recommended Operating Conditions

Supply Voltage Operating (V_{CC})	1.8V to 5.5V
Supply Voltage Data Retention (V_{CC})	1.5V to 5.5V
Input Voltage (V_{IN})	0V to 5.5V
Output Voltage (V_{OUT})	0V to V_{CC}
Operating Temperature (T_A)	–40°C to +85°C
Thermal Resistance (θ_{JA})	350°C/W

Note 1: Absolute maximum ratings are DC values beyond which the device may be damaged or have its useful life impaired. The datasheet specifications should be met, without exception, to ensure that the system design is reliable over its power supply, temperature, and output/input loading variables. Fairchild does not recommend operation outside datasheet specifications.

DC Electrical Characteristics

Symbol	Parameter	V_{CC} (V)	T_A = +25°C Min	Typ	Max	T_A = –40°C to +85°C Min	Max	Units	Conditions	
V_P	Positive Threshold Voltage	1.8	0.7	1.07	1.5	0.7	1.5	V		
		2.3	1.0	1.38	1.8	1.0	1.8			
		3.0	1.3	1.74	2.2	1.3	2.2			
		4.5	1.9	2.43	3.1	1.9	3.1			
		5.5	2.2	2.88	3.6	2.2	3.6			
V_N	Negative Threshold Voltage	1.8	0.25	0.56	0.9	0.25	0.9	V		
		2.3	0.40	0.75	1.15	0.40	1.15			
		3.0	0.6	0.98	1.5	0.6	1.5			
		4.5	1.0	1.42	2.0	1.0	2.0			
		5.5	1.2	1.68	2.3	1.2	2.3			
V_H	Hysteresis Voltage	1.8	0.15	0.51	1.0	0.15	1.0	V		
		2.3	0.25	0.62	1.1	0.25	1.1			
		3.0	0.4	0.76	1.2	0.4	1.2			
		4.5	0.6	1.01	1.5	0.6	1.5			
		5.5	0.7	1.20	1.7	0.7	1.7			
V_{OH}	HIGH Level Output Voltage	1.8	1.7	1.8		1.7		V	$V_{IN} = V_{IH}$	$I_{OH} = -100\ \mu A$
		2.3	2.2	2.3		2.2				
		3.0	2.9	3.0		2.9				
		4.5	4.4	4.5		4.4				
		2.3	1.9	2.14		1.9				$I_{OH} = -8$ mA
		3.0	2.4	2.75		2.4				$I_{OH} = -16$ mA
		3.0	2.3	2.62		2.3				$I_{OH} = -24$ mA
		4.5	3.8	4.13		3.8				$I_{OH} = -32$ mA
V_{OL}	LOW Level Output Voltage	1.8		0.0	0.1		0.1	V	$V_{IN} = V_{IL}$	$I_{OL} = 100\ \mu A$
		2.3		0.0	0.1		0.1			
		3.0		0.0	0.1		0.1			
		4.5		0.0	0.1		0.1			
		2.3		0.10	0.3		0.3			$I_{OL} = 8$ mA
		3.0		0.16	0.4		0.4			$I_{OL} = 16$ mA
		3.0		0.24	0.55		0.55			$I_{OL} = 24$ mA
		4.5		0.25	0.55		0.55			$I_{OL} = 32$ mA
I_{IN}	Input Leakage Current	0 to 5.5			±1		±10	μA	$V_{IN} = 5.5V$, GND	
I_{OFF}	Power Off Leakage Current	0.0			1		10	μA	V_{IN} or $V_{OUT} = 5.5V$	
I_{CC}	Quiescent Supply Current	1.8 to 5.5			1.0		10	μA	$V_{IN} = 5.5V$, GND	

AC Electrical Characteristics

Symbol	Parameter	V_{CC} (V)	$T_A = +25°C$ Min	Typ	Max	$T_A = -40°C$ to $+85°C$ Min	Max	Units	Conditions	Fig. No.
t_{PLH} t_{PHL}	Propagation Delay	1.8	2.0	6.9	11.9	2.0	13.1	ns	$C_L = 15$ pF, $R_L = 1$ MΩ	Figure 1 Figure 3
		2.5 ± 0.2	1.5	4.8	8.2	1.5	9.0			
		3.3 ± 0.3	1.0	3.7	5.6	1.0	6.2			
		5.0 ± 0.5	0.8	3.0	4.7	0.8	5.2			
t_{PLH} t_{PHL}	Propagation Delay	3.3 ± 0.3	1.5	4.3	6.6	1.5	7.3	ns	$C_L = 50$ pF, $R_L = 500\Omega$	Figure 1 Figure 3
		5.0 ± 0.5	1.0	3.6	5.6	1.0	6.2			
C_{IN}	Input Capacitance	0		2.5				pF		
C_{PD}	Power Dissipation Capacitance	3.3		10				pF	(Note 2)	Figure 2
		5.0		12						

Note 2: C_{PD} is defined as the value of the internal equivalent capacitance which is derived from dynamic operating current consumption (I_{CCD}) at no output loading and operating at 50% duty cycle. (See Figure 2.) C_{PD} is related to I_{CCD} dynamic operating current by the expression:
$I_{CCD} = (C_{PD})(V_{CC})(f_{IN}) + (I_{CC}static)$.

AC Loading and Waveforms

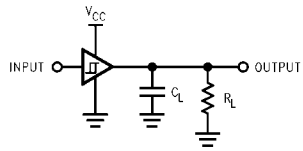

C_L includes load and stray capacitance
Input PRR = 1.0 MHz; t_W = 500 ns

FIGURE 1. AC Test Circuit

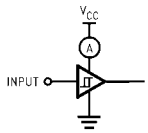

Input = AC Waveform; $t_r = t_f = 1.8$ ns;
PRR = variable; Duty Cycle = 50%

FIGURE 2. I_{CCD} Test Circuit

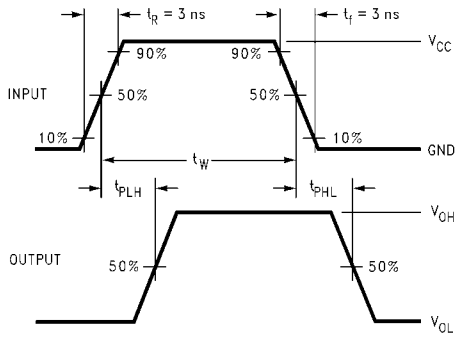

FIGURE 3. AC Waveforms

Tape and Reel Specification

TAPE FORMAT

Package Designator	Tape Section	Number Cavities	Cavity Status	Cover Tape Status
P6	Leader (Start End)	125 (typ)	Empty	Sealed
	Carrier	250	Filled	Sealed
	Trailer (Hub End)	75 (typ)	Empty	Sealed
P6X	Leader (Start End)	125 (typ)	Empty	Sealed
	Carrier	3000	Filled	Sealed
	Trailer (Hub End)	75 (typ)	Empty	Sealed

TAPE DIMENSIONS inches (millimeters)

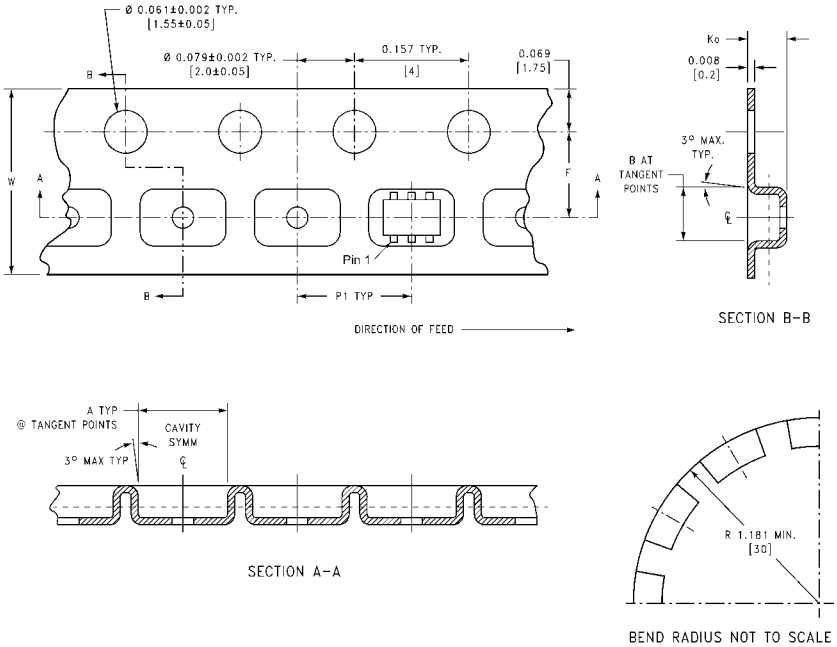

Package	Tape Size	DIM A	DIM B	DIM F	DIM K_o	DIM P1	DIM W
SC70-6	8 mm	0.093 (2.35)	0.096 (2.45)	0.138 ± 0.004 (3.5 ± 0.10)	0.053 ± 0.004 (1.35 ± 0.10)	0.157 (4)	0.315 ± 0.004 (8 ± 0.1)

REEL DIMENSIONS inches (millimeters)

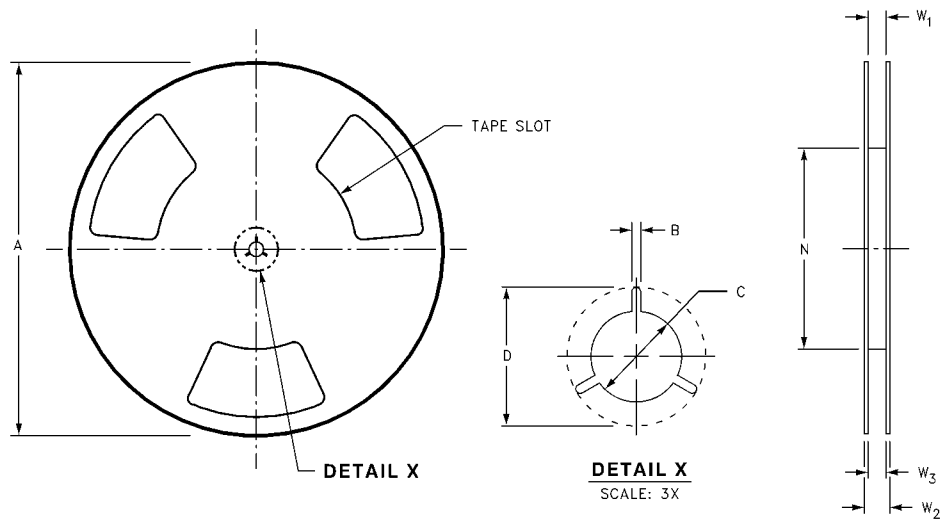

Tape Size	A	B	C	D	N	W1	W2	W3
8 mm	7.0 (177.8)	0.059 (1.50)	0.512 (13.00)	0.795 (20.20)	2.165 (55.00)	0.331 + 0.059/–0.000 (8.40 + 1.50/–0.00)	0.567 (14.40)	W1 + 0.078/–0.039 (W1 + 2.00/–1.00)

Physical Dimensions inches (millimeters) unless otherwise noted

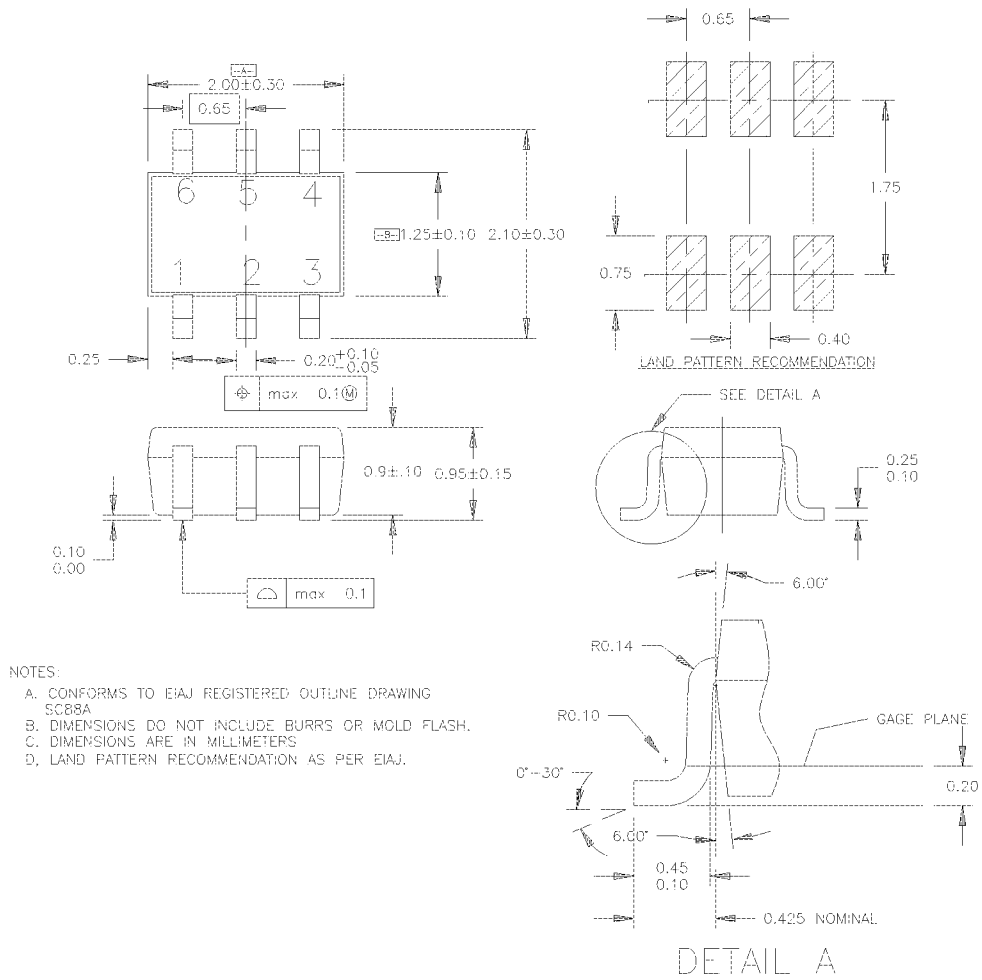

NOTES:
A. CONFORMS TO EIAJ REGISTERED OUTLINE DRAWING SC88A
B. DIMENSIONS DO NOT INCLUDE BURRS OR MOLD FLASH.
C. DIMENSIONS ARE IN MILLIMETERS
D. LAND PATTERN RECOMMENDATION AS PER EIAJ.

6-Lead SC70, EIAJ SC88, 1.25mm Wide
Package Number MAA06A

LIFE SUPPORT POLICY

FAIRCHILD'S PRODUCTS ARE NOT AUTHORIZED FOR USE AS CRITICAL COMPONENTS IN LIFE SUPPORT DEVICES OR SYSTEMS WITHOUT THE EXPRESS WRITTEN APPROVAL OF THE PRESIDENT OF FAIRCHILD SEMICONDUCTOR CORPORATION. As used herein:

1. Life support devices or systems are devices or systems which, (a) are intended for surgical implant into the body, or (b) support or sustain life, and (c) whose failure to perform when properly used in accordance with instructions for use provided in the labeling, can be reasonably expected to result in a significant injury to the user.
2. A critical component in any component of a life support device or system whose failure to perform can be reasonably expected to cause the failure of the life support device or system, or to affect its safety or effectiveness.

www.fairchildsemi.com

Fairchild does not assume any responsibility for use of any circuitry described, no circuit patent licenses are implied and Fairchild reserves the right at any time without notice to change said circuitry and specifications.