RoHS
Available on commercial versions

NPN LOW POWER SILICON TRANSISTOR

Qualified per MIL-PRF-19500/368

Qualified Levels:
JAN, JANTX, JANTXV and JANS

DESCRIPTION

This family of high-frequency, epitaxial planar transistors feature low saturation voltage. These devices are also available in TO-39 and low profile U4 and UA packaging. Microsemi also offers numerous other transistor products to meet higher and lower power ratings with various switching speed requirements in both through-hole and surface-mount packages.

Important: For the latest information, visit our website http://www.microsemi.com.

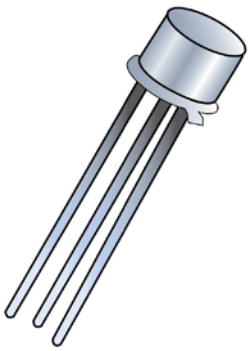

TO-39 (TO-205AD) Package

FEATURES

- JEDEC registered 2N3439 through 2N3440 series.
- JAN, JANTX, JANTXV, and JANS qualifications are available per MIL-PRF-19500/368.
- RoHS compliant versions available (commercial grade only).
- $V_{CE(sat)}$ = 0.5 V @ I_C = 50 mA.
- Turn-On time t_{on} = 1.0 µs max @ I_C = 20 mA, I_{B1} = 2.0 mA.
- Turn-Off time t_{off} = 10 µs max @ I_C = 20 mA, I_{B1} = -I_{B2} = 2.0 mA.

Datasheet Directory

APPLICATIONS / BENEFITS

- General purpose transistors for medium power applications requiring high frequency switching and low package profile.
- Military and other high-reliability applications.

Also available in:

TO-5 package
(long leaded)
2N3439L – 2N3440L

U4 package
(surface mount)
2N3439U4 – 2N3440U4

UA package
(surface mount)
2N3439UA - 2N3440UA

MAXIMUM RATINGS (T_C = +25°C unless otherwise noted)

Parameters / Test Conditions	Symbol	2N3439	2N3440	Unit
Collector-Emitter Voltage	V_{CEO}	350	250	V
Collector-Base Voltage	V_{CBO}	450	300	V
Emitter-Base Voltage	V_{EBO}	7.0		V
Collector Current	I_C	1.0		A
Total Power Dissipation @ T_A = +25°C (1) @ T_C = +25°C (2)	P_D	0.8 5.0		W
Operating & Storage Junction Temperature Range	T_J, T_{stg}	-65 to +200		°C

Notes: 1. Derate linearly @ 4.57mW/°C for T_A > +25°C.
2. Derate linearly @ 28.5mW/°C for T_C > +25°C

MSC – Lawrence
6 Lake Street,
Lawrence, MA 01841
Tel: 1-800-446-1158 or
(978) 620-2600
Fax: (978) 689-0803

MSC – Ireland
Gort Road Business Park,
Ennis, Co. Clare, Ireland
Tel: +353 (0) 65 6840044
Fax: +353 (0) 65 6822298

Website:
www.microsemi.com

©2011 Microsemi Corporation

MECHANICAL and PACKAGING

- CASE: Hermetically sealed, kovar base, nickel cap.
- TERMINALS: Tin/lead solder dip or RoHS compliant pure tin (commercial grade only) plate over gold.
- MARKING: Part number, date code, manufacturer's ID.
- POLARITY: NPN (see package outline).
- WEIGHT: Approximately 1.064 grams.
- See Package Dimensions on last page.

PART NOMENCLATURE

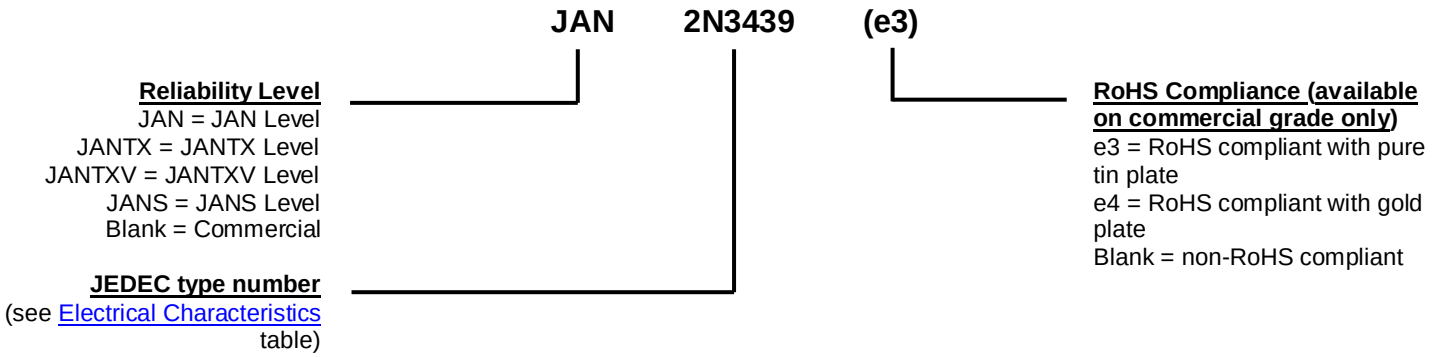

SYMBOLS & DEFINITIONS

Symbol	Definition
C_{obo}	Common-base open-circuit output capacitance.
I_{CEO}	Collector cutoff current, base open.
I_{CEX}	Collector cutoff current, circuit between base and emitter.
I_{EBO}	Emitter cutoff current, collector open.
h_{FE}	Common-emitter static forward current transfer ratio.
V_{CEO}	Collector-emitter voltage, base open.
V_{CBO}	Collector-emitter voltage, emitter open.
V_{EBO}	Emitter-base voltage, collector open.

©2011 Microsemi Corporation

ELECTRICAL CHARACTERISTICS (T_A = +25°C, unless otherwise noted)

OFF CHARACTERISTICS

Parameters / Test Conditions		Symbol	Min.	Max.	Unit
Collector-Emitter Breakdown Voltage I_C = 10 mA R_{BB1} = 470 Ω; V_{BB1} = 6 V L = 25 mH (min); f = 30 – 60 Hz	2N3439 2N3440	$V_{(BR)CEO}$	350 250		V
Collector-Emitter Cutoff Current V_{CE} = 300 V V_{CE} = 200 V	2N3439 2N3440	I_{CEO}		2.0 2.0	µA
Emitter-Base Cutoff Current V_{EB} = 7.0 V		I_{EBO}		10	µA
Collector-Emitter Cutoff Current V_{CE} = 450 V, V_{BE} = -1.5 V V_{CE} = 300 V, V_{BE} = -1.5 V	2N3439 2N3440	I_{CEX}		5.0 5.0	µA
Collector-Base Cutoff Current V_{CB} = 360 V V_{CB} = 250 V V_{CB} = 450 V V_{CB} = 300 V	2N3439 2N3440 2N3439 2N3440	I_{CBO}		2.0 2.0 5.0 5.0	µA

ON CHARACTERISTICS (1)

Parameters / Test Conditions	Symbol	Min.	Max.	Unit
Forward-Current Transfer Ratio I_C = 20 mA, V_{CE} = 10 V I_C = 2.0 mA, V_{CE} = 10 V I_C = 0.2 mA, V_{CE} = 10 V	h_{FE}	40 30 10	160	
Collector-Emitter Saturation Voltage I_C = 50 mA, I_B = 4.0 mA	$V_{CE(sat)}$		0.5	V
Base-Emitter Saturation Voltage I_C = 50 mA, I_B = 4.0 mA	$V_{BE(sat)}$		1.3	V

DYNAMIC CHARACTERISTICS

Parameters / Test Conditions	Symbol	Min.	Max.	Unit
Magnitude of Common Emitter Small-Signal Short-Circuit Forward Current Transfer Ratio I_C = 10 mA, V_{CE} = 10 V, f = 5.0 MHz	$\|h_{fe}\|$	3.0	15	
Forward Current Transfer Ratio I_C = 5.0 mA, V_{CE} = 10 V, f = 1.0 kHz	h_{fe}	25		
Output Capacitance V_{CB} = 10 V, I_E = 0, 100 kHz ≤ f ≤ 1.0 MHz	C_{obo}		10	pF
Input Capacitance V_{CB} = 5.0 V, I_E = 0, 100 kHz ≤ f ≤ 1.0 MHz	C_{ibo}		75	pF

(1) Pulse Test: Pulse Width = 300 µs, duty cycle ≤ 2.0%.

©2011 Microsemi Corporation

ELECTRICAL CHARACTERISTICS (T_A = +25°C, unless otherwise noted) continued

SWITCHING CHARACTERISTICS

Parameters / Test Conditions	Symbol	Min.	Max.	Unit
Turn-On Time V_{CC} = 200 V; I_C = 20 mA, I_{B1} = 2.0 mA	t_{on}		1.0	µs
Turn-Off Time V_{CC} = 200 V; I_C = 20 mA, I_{B1} = -I_{B2} = 2.0 mA	t_{off}		10	µs

SAFE OPERATING AREA (See graph below and also reference test method 3053 of MIL-STD-750.)

DC Tests	
T_C = +25 °C, 1 Cycle, t = 1.0 s	
Test 1	
V_{CE} = 5.0 V, I_C = 1.0 A	Both Types
Test 2	
V_{CE} = 350 V, I_C = 14 mA	2N3439
Test 3	
V_{CE} = 250 V, I_C = 20 mA	2N3440

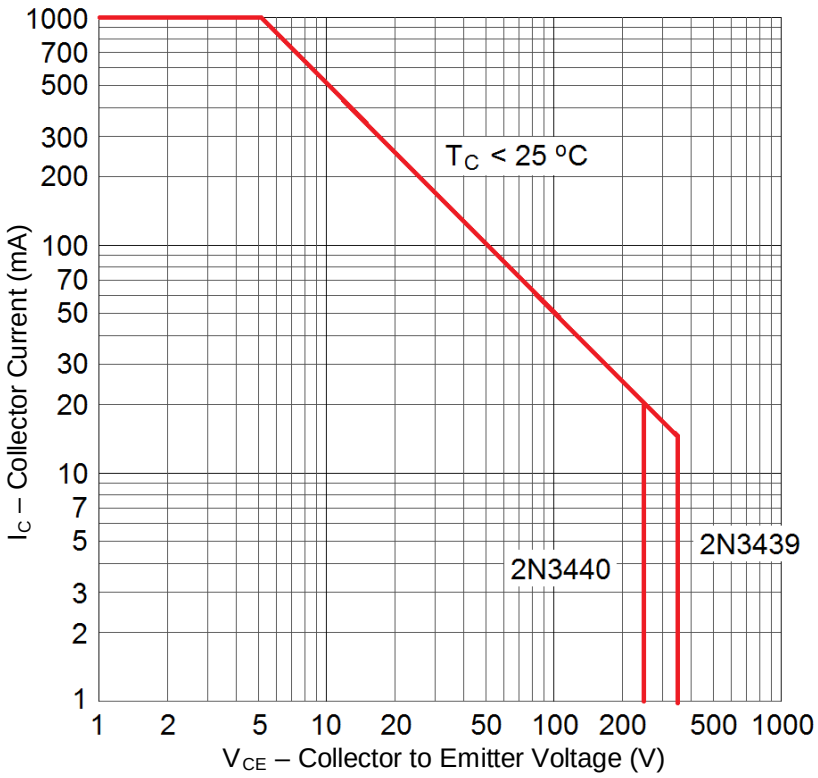

Maximum Safe Operating graph (continuous dc)

©2011 Microsemi Corporation

GRAPHS

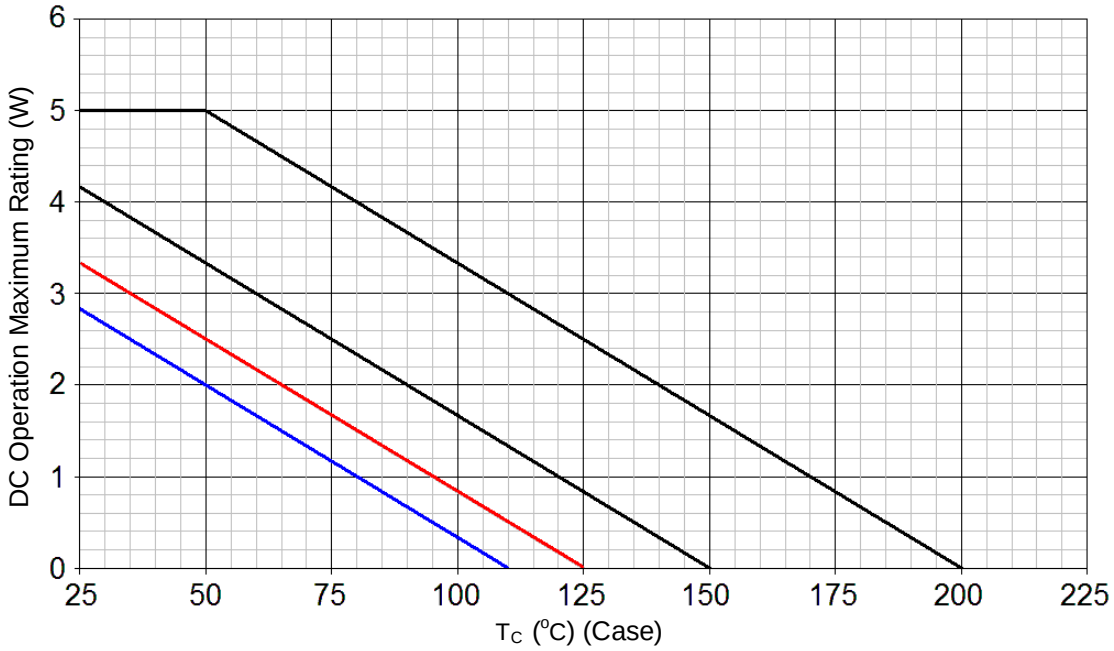

FIGURE 1
Temperature-Power Derating Curve
NOTES: Thermal Resistance Junction to Case = 30.0 °C/W
Max Finish-Alloy Temp = 175.0 °C

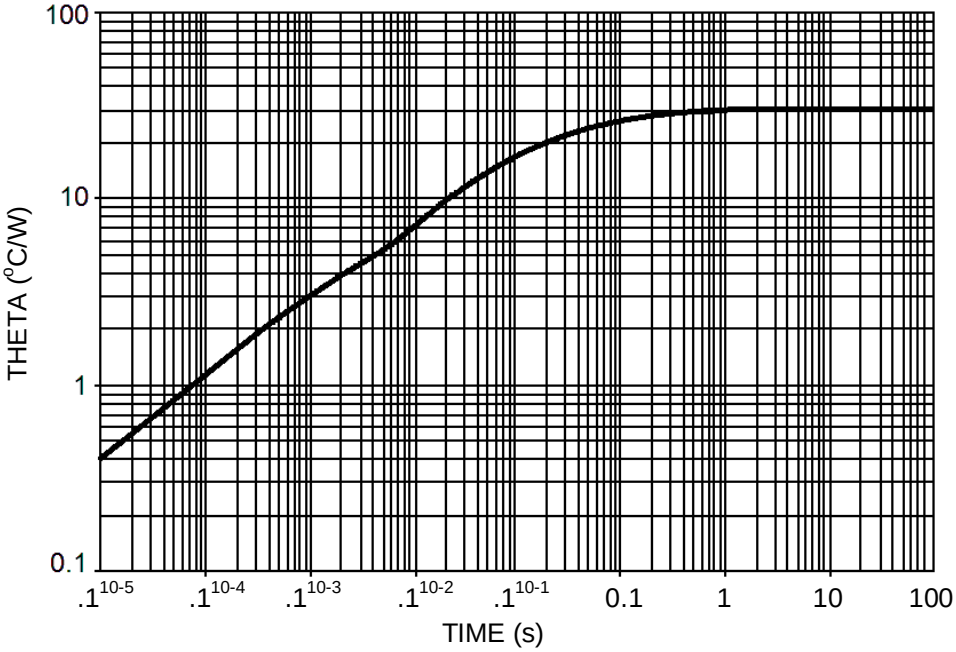

FIGURE 2
Maximum Thermal Impedance
NOTE: T_C = +25 °C, P_T = 5.0 W, thermal resistance $R_{\theta JC}$ = 30 °C/W, steel.

©2011 Microsemi Corporation

PACKAGE DIMENSIONS

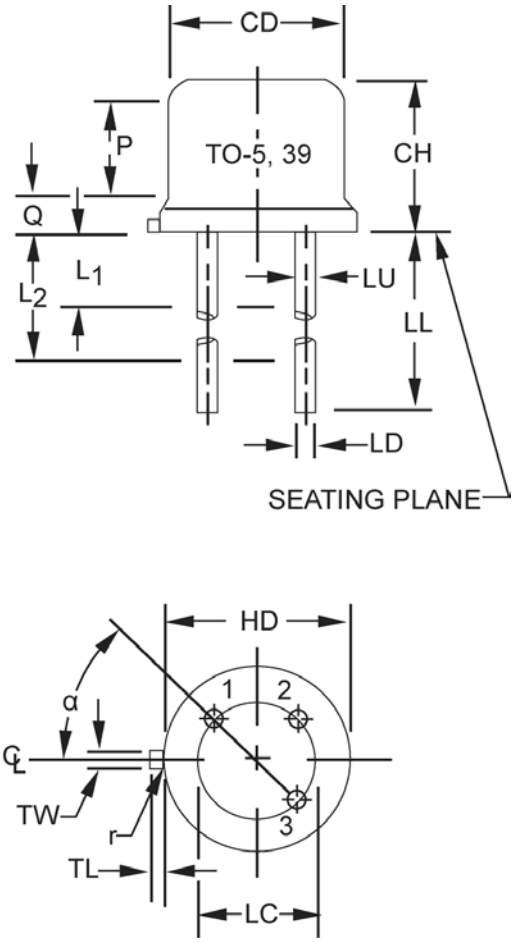

Symbol	Dimensions				Note
	Inches		Millimeters		
	Min	Max	Min	Max	
CD	.305	.335	7.75	8.51	6
CH	.240	.260	6.10	6.60	
HD	.335	.370	8.51	9.40	
LC	.200 TP		5.08 TP		7
LD	.016	.019	0.41	0.48	8,9
LL	See note 14				
LU	.016	.019	0.41	0.48	8,9
L1		.050		1.27	8,9
L2	.250		6.35		8,9
P	.100		2.54		7
Q		.030		0.76	5
TL	.029	.045	0.74	1.14	3,4
TW	.028	.034	0.71	0.86	3
r		.010		0.25	10
α	45° TP		45° TP		7

NOTES:

1. Dimensions are in inches.
2. Millimeters are given for general information only.
3. Beyond r (radius) maximum, TW shall be held for a minimum length of .011 (0.28 mm).
4. Dimension TL measured from maximum HD.
5. Body contour optional within zone defined by HD, CD, and Q.
6. CD shall not vary more than .010 inch (0.25 mm) in zone P. This zone is controlled for automatic handling.
7. Leads at gauge plane .054 +.001 -.000 inch (1.37 +0.03 -0.00 mm) below seating plane shall be within .007 inch (0.18 mm) radius of true position (TP) at maximum material condition (MMC) relative to tab at MMC. The device may be measured by direct methods or by gauging procedure.
8. Dimension LU applies between L1 and L2. Dimension LD applies between L2 and LL minimum. Diameter is uncontrolled in and beyond LL minimum.
9. All three leads.
10. The collector shall be internally connected to the case.
11. Dimension r (radius) applies to both inside corners of tab.
12. In accordance with ASME Y14.5M, diameters are equivalent to Φx symbology.
13. Lead 1 = emitter, lead 2 = base, lead 3 = collector.
14. For transistor types 2N3439 and 2N3440 (TO-39), dimension LL = .5 inch (12.70 mm) min. and .750 inch (19.05 mm) max.

©2011 Microsemi Corporation

Mouser Electronics

Authorized Distributor

Click to View Pricing, Inventory, Delivery & Lifecycle Information:

Microsemi:

2N3440 JAN2N3439 JANTXV2N3439 JANTXV2N3440 JAN2N3440 JANTX2N3439 JANTX2N3440