DIMENSIONS

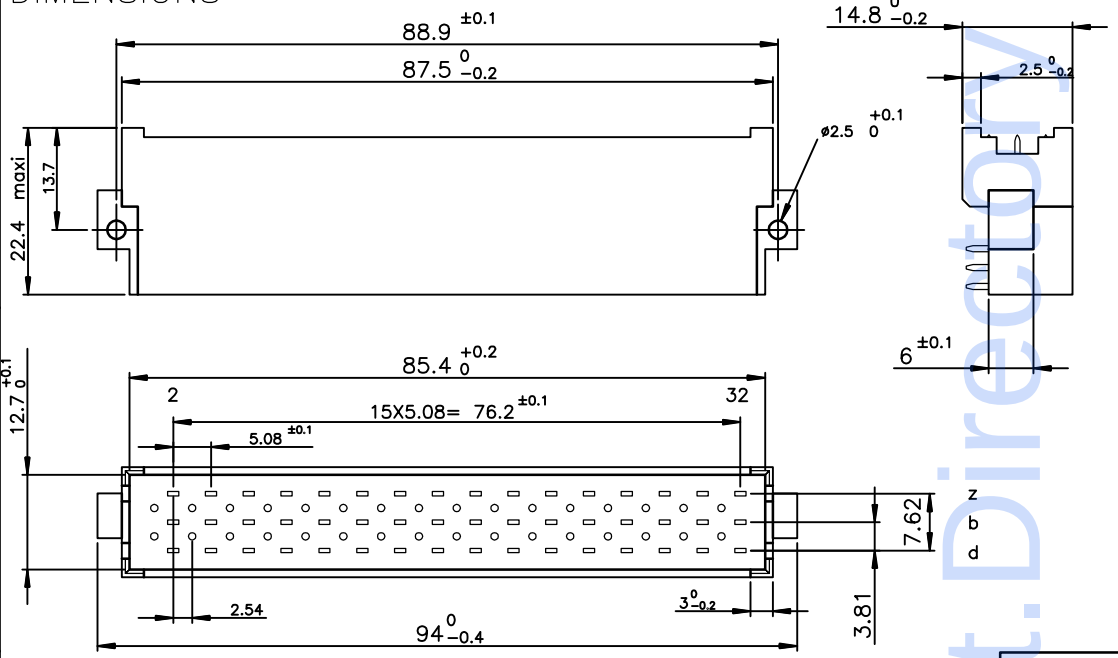

ELECTRICAL DATA

–Current at AMB.	5.5 A at 20° / 4 A at 70°
–Contact resistance	≤15mΩ according to DIN 41640 Teil 4 test 2a
–Insulation resistance	$\geq 10^6$ MΩ according to DIN 41640 teil 7 test 3a
–TEST VOLTAGE	according to DIN 41640 teil 21
contact/contact	1550 V
contact/ground	2500 V

MECHANICAL DATA

–Insertion force	≤75N
–Mechanical endurance	500 matings unmatings according to DIN41640 teil 21
–Material insulator	Thermoplastic UL94V1
–Material contacts	Copper alloy
–Finishing contact surface	Gold over nickel Lead Free
–Finishing termination	Lead–Free
–Schock	≤30mΩ according to DIN 41640 Teil 14 test 6c
–Vibration	10–2000Hz/20g according to DIN 41640 Teil 15

ENVIRONMENTAL DATA

–Climatic category	According to DIN 41612 – class 1
–Corrosion	According to DIN 41612 – class 1

ALL CONTACTS ARE IN ADVANCED POSITION
PERFORMANCES AS PER DIN 41612 STYLE F CLASS 1

TERMINATION

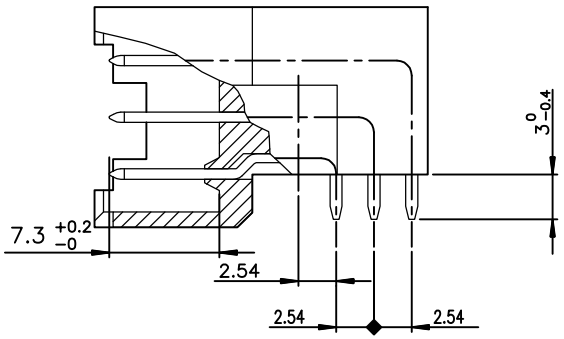

NOTE RoHS INFORMATION

– The "LF" products meet European Union Directives and other country regulations as described in GS–22–008.
– The housing will whistand exposure to 260°C peak temperature for 3.5 seconds in a wave solder application with a 1.6mm minimum thick circuit board.
– For the right angled versions , like the current leaded versions, it's recommended to use high temperature adhesive or metallic device, to protect the nearlest plastic part in contact with of the solder wave, to avoid any visual plastic deterioration.

LEAD–FREE PART–NUMBER
5159009486394AAKLF

P.C. CARD DRILLING

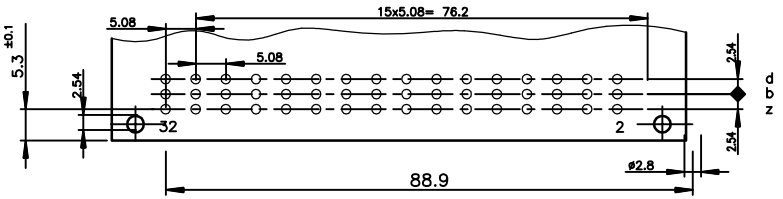

REV F – 2006–04–17

rev	ecn no	dr	date
B	LS06–0022	LGO	2006/02/21
C	LS06–0095	LGO	2006/06/26
D	LS07–0288	LGO	2007/11/19
E	F10–0214	APA	2010/10/01
F	F12–0053	APA	2012/05/07
–	–	–	–
–	–	–	–

European Views

www.fciconnect.com			surface ISO 1302	tolerance std ISO 406 ISO 1101		projection	mm
			TOLERANCES UNLESS OTHERWISE SPECIFIED				
Dr	PESSON	2006/02/21	ANGULAR	LINEAR	0.X ±0.1	size A3	Scale 1.5
Eng	PESSON	2006/02/21			0.XX ±0.1		
Chr	LEGARE	2006/02/21	0.XX° ±2°		0.XXX ±0.1	ECN	F12–0053
Appr	LEGARE	2006/02/21	Product family		DIN POWER	Spec ref	–
title	MALE CONNECTOR 3 ROW 48 CONTACTS					dwg no	C01–5159–0051 Rev. F
catalog no			–			CUSTOMER	sheet 1 of 1

PDM: Rev:F STATUS: Released Printed: May 24, 2012