Datasheet Directory

CATALOGUE 2017-2018

OPTOELECTRONIC COMPONENTS

www.everlight.com

EVERLIGHT

EVERLIGHT

THE SOURCE OF LIGHT

EVERLIGHT Electronics Co., Ltd. was founded in 1983 in Taipei, Taiwan led by Chairman Robert Yeh, EVERLIGHT Electronics Co. have over 33 years of R&D experience for reliable capability. With immediate service and an excellent brand reputation, EVERLIGHT has taken top five in the competitive LED market. Our products are manufactured and packed in-house to guarantee maximum quality and service.

EVERLIGHT provides a diverse product portfolio consisting of High Power LEDs, SMD LEDs, Lamps, Lighting Components, LED Lighting Modules, Digital Displays, Opto-couplers and Infrared Components for various applications. Today, EVERLIGHT is a global company with over 6,400 employees based in China, Hong Kong, Japan, Korea, Singapore, Malaysia, India, Germany and U.S.A.

For more information, please visit our website :
www.everlight.com

CONTENTS

Alphanumeric Index			04
Conditions of RoHS			15
Application Notice			16
Technical Data			17
Visible LED			
High Power LED			48
Driver on Board			51
Chip on Board			53
Low Middle Power LED			66
UV			77
Flash LED	High Power Flash LED	2016 Package	82
		1610 Package	85
		ELDA Series	86
		CSP Series	86
		Module Type	87
SMD LED	Subminiature LED Lamps(Leadframe)		88
	Surface Mount Chip LED (PCB)	Top View LED	90
		Top View 0402 (0.2T~0.5T)	91
		Top View 0603 (0.2T~0.8T)	92
		Top View 0805	97
		Top View 1206	99
		Top View Mono Color	100
		Top View Bi-Color	101
		Top View Full Color	104
		Side View (0.2T~1.0T)	106
		Side View Bi-Color	109
		Side View Full Color	110
		Reverse Mount	111
		Reverse Mount Bi-color	113
	Surface Mount PLCC LEDs (Reflector)	Top View LED	114
		Top View Bi-Color	115
		Top View PLCC2	116
		Top View PLCC3	117
		Side View LED	118
LED Lamps	2mm Tower Type		119
	3mm Round Type		119
	5mm Round Type		124
	3mm Cylindrical		128
	5mm Cylindrical		128
	5mm Square		128
	Rectangular		129
LED Digital Displays	Chip On Board Display	Single Digit Display	131
		Dual Digit Display	132
		Three Digit Display	135
		Four Digit Display	137
	SMD Display	Single Digit Display	138
		Dual Digit Display	140
		Three Digit Display	141
		Four Digit Display	143
	Dot Matrix Display		144
	Light Bar Display		144
Signage LED	Surface Mount Chip LED (PCB)		145
	Surface Mount PLCC LED (Reflector)		148
	Lamp Type LED	3mm Oval Type	150
		5mm Oval Type	151
		5mm Round Type	152
Automotive LED	Exterior Application	High Power LED	153
		Mid Power LED	155
		Low Power LED	156
	Interior Application	Low Power LED	159
Backlighting LED	TV/Monitor		164
	Portable		169

CONTENTS

Infrared LED, Sensors, Couplers

Infrared LED and Silicon Detector	Emitter	Lamp 3mm	174
		Lamp 5mm	175
		Piranha	179
		Side Look	180
		SMD	181
		High Power	190
	Photo Diode	DIP	191
		Side Look	192
		SMD	193
	Photo Transistor	DIP	198
		Side Look	200
		SMD	202
Infrared Receiver Module	DIP	Vout–GND–Vcc	207
		Vout–Vcc–GND	210
	SMD	Side-View	211
		Top-View	213
	Standard Burst	SMD	216
Optic-Fiber Device (Photo Link)	Receiver (PLR) Component		217
	Receiver (PLR) Module		219
	Transmitter (PLT) Component		222
	Transmitter (PLT) Module		224
Optical Sensors	Ambient Light Sensor	Analog	226
	Proximity Sensor	Digital	231
	RGB Color Sensor	Single Color Sensor (Analog)	232
	Reflective Sensor		233
	Transmissive Sensor		237
Photo Coupler	Darlington Transistor	4Pin DIP-DC	243
		4Pin SOP-DC	243
		6Pin DIP-DC	244
		8Pin DIP-DC	244
	High Speed	5Pin SOP-DC	245
		8Pin SOP-DC	246
		8Pin DIP-DC	247
		8Pin Wide Body DIP-DC	249
	High Speed Low Input Current	8Pin SOP-DC	250
	Schmitt Trigger	6Pin DIP-DC	250
	Transistor	4Pin DIP-AC	251
		4Pin DIP-DC	251
		4Pin SOP-AC	252
		4Pin SOP-DC	252
		4Pin SSOP-AC	253
		4Pin SSOP-DC	253
		4Pin LSOP-DC	254
		5Pin LSOP-DC	254
		6Pin DIP-DC	255
		6Pin DIP-AC	256
		8Pin DIP-DC	256
		8Pin SOP-DC	256
		8Pin SSOP-DC	257
		16Pin DIP-DC	258
		16Pin SSOP-AC	258
		16Pin SSOP-DC	258
	Transistor Low Input Current	4Pin DIP-DC	259
		4Pin LSOP-DC	259
	Transistor High Isolation	4Pin DIP-DC	260
	Triac	4Pin SOP-DC	261
		4Pin DIP-DC	262
		5Pin DIP-DC	263
		6Pin DIP-DC	264
	Photo Power Triac	7Pin DIP-DC	265
	Solid State Relay	4Pin DIP-DC	265
		6Pin DIP-DC	266
		8Pin DIP-DC	266

ALPHANUMERIC INDEX

VISIBLE LED

1003SUBD/S400-A6	130
1003SUGD/S400-A4	130
1003SURD/S530-A3	130
1003SYGD/S530-E2	130
103SURD/S530-A3	119
103SYGD/S530-E2	119
103UYD/S530-A3	119
12-11/BHC-ZL1M2QY/2C	106
12-21/BHC-AN1P2/2C	106
12-21/BHC-ZL1M2RY/2C	106
12-21/GHC-YR2S2/2C	106
12-21/R8C-AN1P2B/2D	106
12-21/T3D-AQ2S2M/2C	106
12-215/BHC-AN1P2/3C	107
12-215/BHC-XL1M2HY/3C	107
12-215/G6C-AL2M2B/3C	107
12-215/G6C-BP1Q2L/3C	107
12-215/R6C-AR1S1B/3C	107
12-215/T1D-ANPHY/3C	107
12-215/Y2C-BR1S1L/3C	107
12-215/Y2C-CP1Q2B/3C	107
12-215/Y2C-CQ1R1B/3C	107
12-21C/BHC-AN1P2/2C	106
12-21C/BHC-YL1M2HY/2C	106
12-21C/T3D-CP1Q2B12Y/2C	106
12-22/BHR6C-A01/2C	109
12-22/G6R8C-A30/2C	109
12-22/R6GHC-A30/2C	109
12-22/Y2G6C-A30/2C	109
12-23C/R6GHBHC-A01/2C	110
12-23C/S2GHBHC-A01/2C	110
1224SDRC/S530-A4	121
1224SUGC/S400-A5	121
1224SURC/S530-A3	121
1224SYGC/S530-E2	121
1224USOC/S530-A3	121
1224UTC/S400-A6	121
1224UYC/S530-A3	121
1254-10SDRT/S530-A3	122
1254-10SURT/S530-A3	122
1254-10SYGT/S530-E2	122
1254-10UYD/S530-A3	122
1254-10UYOT/S530-A3	122
1259-7SDRSYGW/S530-A3	122
1259-7SURSYGW/S530-A3	122
1259-7UYSYGW/S530-A3	122
1383-2SDRD/S530-A3	126
1383-2SURD/S530-A3	126
1383SYGD/S530-E2	126
1383UYD/S530-A3	126
15-11/BHC-AN1P2/2T	98
15-11/BHC-ZL2N1QY/2T	98
15-13D/R6GHBHC-A01/2T	104
15-21/B6C-YR1S2B2/2T	99
15-21/B6C-ZQ1R1N/2T	99
15-21/BHC-AN1P2/2T	99
15-21/G6C-BK1L2VY/2T	99
15-21/G6C-FM1N2B/2T	99
15-21/G6C-FP1Q1L/2T	99
15-21/GHC-R2S2/2T	99
15-21/GHC-YR1S1/2T	99
15-21/R6C-AN1P2/2T	99
15-21/R6C-FQ1R1B/2T	99
15-21/S2C-AL2M2VY/2T	99
15-21/S2C-AQ2R2B/2T	99
15-21/S3C-AP1Q2/2T	99
15-21/T1D-CP1Q2TY/2T	99
15-21/T7D-JQ2S1PY/2T	99
15-21/Y2C-AN1P2/2T	99
15-21/Y2C-CP1Q2B/2T	99
15-215/G7C-BN1P2B/2T	99
15-215/R6C-AM2P1VY/2T	99
15-215/R6C-AP1Q1L/2T	99
15-21-G6C-A0N1P2B0E-2T-AM	162
15-21-R6C-B0Q1R2B0E-2T8-AM	162
15-21-Y2SC-A0S1T1B25E-2T-AM	162
15-22/R6G6C-A32/2T	101
15-22/R6GHC-A01/2T	101
1533SURD/S530-A3	130
1533UYD/S530-A3	130
16-213/BHC-AN1P2/3T	91
16-213/BHC-ZL1M2QY/3T	91
16-213/GHC-YR1S1/3T	91
16-213/R6C-A2225VZ/3T	91
16-213/T3D-AP1Q2QY/3T	91
16-213/T7D-AQ1R1QY/3T	91
16-216/T3D-AQ1R2TY/3T	91
16-219A/T2D-AR2T1QY/3T	91
16-916/T1D-AP1Q2QY/3T	107
17-11/BHC-AN1P2/3T	97
17-21/BHC-AN1P2/3T	97
17-21/BHC-AP1Q2/3T	97
17-21/BHC-XLMJY/3T	97
17-21/G6C-AN1P1B/3T	97
17-21/G6C-AP1Q1B/3T	97
17-21/G6C-FM1N2B/3T	97
17-21/G6C-FN1P2B/3T	97
17-21/G6C-FP1Q1B/3T	97
17-21/GHC-XS1T2M/3T	97
17-21/GHC-YR1S2/3T	97
17-21/GPC-AK0M1B/3T	97
17-21/GVC-AMPB/3T	97
17-21/R6C-AN2Q1B/3T	97
17-21/R6C-AP1Q2L/3T	97
17-21/R7C-AN2Q1B/3T	97
17-21/S2C-AN1P2B/3T	97
17-21/S2C-AP1Q2B/3T	97
17-21/T1D-ANPHY/3T	97
17-21/T1D-CP2R1TY/3T	97
17-21/T1D-KN2P2HY/3T	97
17-21/Y2C-AN1P2/3T	97
17-21/Y2C-CN1P2B/3T	97
17-21/Y2C-CP2Q2B/3T	97
17-215/B6C-YP2R2/3T	98
17-215/BHC-AN1P2/3T	98
17-215/BHC-BP2Q2M/3T	98
17-215/G6C-BM1N2L/3T	98
17-215/G6C-FN2P2B/3T	98
17-215/R6C-AQ1R2B/3T	98
17-215/S2C-AQ1R2B/3T	98
17-215/S2C-CP2R1B/3T	98
17-215-G6C-F5M1N2B0E-3T-AM	163
17-215-R6C-A0Q2R2B0E-3T-AM	163
17-215-S3C-5UQ2R2B0E-3T-AM	163
17-215-Y2C-P9Q2S1B0E-3T-AM	163
17-223/BHR7C-C30/3C	109
18-032ABD/BDGAR6SY-S01/10T	147
18-035BD/BDR6GASY-S01/10T	146
18-036BD/BDR6GASY-S01/10T	145
18-038ABT/ BDGAR6S1-L40/10T	147
18-038BT/BDGAR6S1-L40/10T	145
18-039AB/BDGAR6S1-R40/10T	147
18-039B/BDR6GAS1-R40/10T	145
18-218/T1D-AN2Q1B3X/6T	100
18-225/B6R6C-C01/3T	101
18-225/R6G6C-A01/3T	101
18-225/S2G6C-A01/3T	101
18-225A/R6GHW-B01/3T	101
19-049/GABDR6GAS1-R40/4T	146
19-117/BHC-YJ2K2TX/3T	92
19-117/BHC-ZL1M2RY/3T	92
19-117/T1D-AP2Q2QY/3T	92
19-118/BHC-ZL1M2QY/3T	92
19-123/Y2ST1D-C30/2T	102
19-137/R6GHBHC-A01/2T	104
19-21/B6C-AP2Q2M/3T	93
19-21/BHC-AP1Q2/3T	93
19-21/BHC-YL1M1RY/3T	93
19-21/BHC-ZQ1R2N/3T	93
19-21/G6C-AL1M2LY/3T	93
19-21/G6C-FM1N2B/3T	93
19-21/G6C-FP1Q1L/3T	93
19-21/GHC-YN1P2QY/3T	93
19-21/GPC-FL1M2B/3T	93
19-21/R6C-AL2N1VY/3T	93
19-21/R6C-FP1Q2L/3T	93
19-21/R7C-AK1L2BY/3T	93
19-21/R7C-AN2Q1B/3T	93
19-21/R8C-FN2Q1L/3T	93
19-21/S2C-AL2M2VY/3T	93
19-21/S2C-AQ1R2B/3T	93
19-21/T1D-ANPHY/3T	93
19-21/T1D-CPQTY/3T	93
19-21/Y2C-AL1M2VY/3T	93
19-21/Y2C-CP1Q2B/3T	93
19-213 /Y2C-CQ1R2/3T	95
19-213/B7C-AQ2S1B2/3T	95
19-213/BHC-AN1P2/3T	95
19-213/G6C-AP1Q2/3T	95
19-213/G6C-BM1N2B/3T	95
19-213/G6C-FN2Q1L/3T	95
19-213/G6W-FN1P1B/3T	95
19-213/GHC-XS1T1N/3T	95
19-213/GHC-YP1Q2QY/3T	95
19-213/GHC-YR1S2/3T	95
19-213/R6C-AM2P1VY/3T	95
19-213/R6C-AN1P2/3T	95
19-213/R6C-AN2Q1B/3T	95
19-213/R6C-AP1Q2B/3T	95
19-213/R6C-AQ1R2B/3T	95

19-213/R8C-FN1P2/3T	95
19-213/S2C-AN1P2B/3T	95
19-213/S3C-AN2P2B/3T	95
19-213/T1D-ANPHY/3T	95
19-213/Y2C-AP1Q2B/3T	95
19-213/Y2C-CN1P2/3T	95
19-213/Y2C-CP1Q2L/3T	95
19-213/Y2C-CQ2R2L/3T	95
19-213A/T1D-CP2Q2HY/3T	94
19-213-G6SC-M0P1Q1B0E-3T-AM	163
19-213-R6C-A0R2S2B0E-3T-AM	163
19-213-S3SC-B0S1T1B0E-3T-AM	163
19-213-Y2SC-9AS1T1B0E-3T-AM	163
19-217/B9C-ANQE/3T	94
19-217/BHC-AN1P2/3T	94
19-217/BHC-XK1L2B11X/3T	94
19-217/BHC-YL2M2TY/3T	94
19-217/G7C-AL1M2B/3T	94
19-217/GHC-YR1S2/3T	94
19-217/R6C-P1Q2/3T	94
19-217/S2C-AL1M2VY/3T	94
19-217/S3C-AL2N1VY/3T	94
19-217/T1D-ANPHY/3T	94
19-217/T1D-JP1Q2QY/3T	94
19-217/Y5C-AM1N1VY/3T	94
19-217/Y5C-APQB/3T	94
19-217/Y5C-AQ2R2/3T	94
19-218/BHC-ZL1M2QY/3T	96
19-218/GHC-YR1S2M/3T	96
19-218/R6C-AL1M2VY/3T	96
19-218/R6C-FM2P1B7Y/3T	96
19-218/T1D-CQ2R2TY/3T	96
19-219/T3D-AQ2R2TY/3T	96
19-219/T7D-AV1W1E/3T	96
19-219/Y5C-AM1N2VY/3T	96
19-22/G6R6C-A31/2T	102
19-22/R6BHC-B01/2T	102
19-22/R6G6C-A01/2T	102
19-22/R6GHC-C02/2T	102
19-22/Y2G6C-A14/2T	102
19-223/G6S2C-A01/2T	103
19-223/R6BHC-A05/2T	103
19-223/R6G6C-A01/2T	103
19-223/R7BHC-A30/2T	103
19-223/R7G6C-A01/2T	103
19-223/S2BHC-A01/2T	103
19-223/S2T1D-C30/2T	103
19-223/Y2G6C-A01/2T	103
19-226/R6BHC-B01/2T	103
19-226/R6G7C-B02/2T	103
19-226/R6GHC-A03/2T	103
19-237/R6GHBHC-A04/2T	104
19-237A/BHR6GHCA01/2T	105
19-237B/R6GHBHCC01/2T	105
19-337/R6GHBHC-A01/2T	105
204-10SDRD/S530-A3	119
204-10SUBC/S400-A4	119
204-10SUGC/S400-A5	119
204-10SURD/S530-A3	119
204-10SYGD/S530-E3	119
204-10UYD/S530-A3	119
204-10UYOC/S530-A3	119
209SDRSYGW/S530-A3	120
209SURSYGW/S530-A3	120
22-21/BHC-AN1P2/2C	108
22-21/GHC-YR1S2/2C	108
22-23/R6GHBHC-A01/2C	110
22-23C/R6GHBHW-A01/2C	146
22-23C/R6GHBHW-C01/2C	110
23-21/G6C-AL2N1/2T	111
23-21/GHC-YR2T1/2A	111
23-21/R6C-AM1N2AY/2A	111
23-21/R8C-AN2Q1B/2T	111
23-215A/BHC-DN2P2E/5A	112
23-21B/BHC-AN1P2/2A	111
23-21B/BHC-ZM1N2TY/2A	111
23-21B/G6C-AM2P1/2A	111
23-21B/S2C-AP1Q2B/2A	111
23-21B/T1D-ANQHY/2A	111
23-21B/T1D-CP2Q2TY/2A	111
23-21B/W1D-ANQHY/2A	111
23-21C/T1D-CP2Q2TY/2A	111
23-22B/R7G6C-A30/2T	113
23-22B/S2BHC-C30/2A	113
23-22C/S2BHC-B30/2A	113
23-23B/R6GHBHC-A01/2A	113
24-21/BHC-AN1P2/2A	112
24-21/GHC-YR2T1/2A	112
264-7SDRC/S530-A3	120
264-7SUBC/S400-X9	120
264-7SUGC/S400-A5	120
264-7SURC/S400-A8	120
264-7SYGC/S530-E3	120
264-7UYC/S400-A9	120
264-7UYOC/S530-A3	120
27-21/BHC-AN1P2/3C	108
27-21/BHC-AP1Q2/3C	108
27-21/GHC-YR1S2M/3C	108
27-21/R6C-AP1Q2B/3C	108
27-21/T1D-ANPHY/3C	108
27-21/T1D-CQ1R2NW/3C	108
27-21/T3D-AP2Q2HY/3C	108
27-21/Y2C-CPQB/3D	108
28-21SDRC/S530-A3/TR8	88
28-21SURC/S530-A2/TR8	88
28-21UYC/S530-A3/TR8	88
3003UM2C/TR8-T	171
3004UM2C/TR8-T	171
3006UM2C/TR8-T	170
313-2SUBC/C470/S400-A4	124
313-2SYGC/S530-E2	124
313-2UYD/S530-A3	124
323-2SDRD/S530-A3	124
323-2SURD/S530-A3	124
323-2SYGD/S530-E2	124
3294-15SUBC/S400-A6	123
3294-15SUGC/S400-A6	123
3294-15SURC/S400-A7	123
3294-15UBGC/S400-A6	123
333/B1C1-ARUA/MS	152
333/G1C1-AWYA/MS	152
333/R7C1-AUWB/P/MS	152
333/Y7C1-ATWB/P/MS	152
333-2SDRC/S530-A4	125
333-2SUBC/C470/S400-A6	125
333-2SUGC/S400-A5	125
333-2SURC/S400-A8	125
333-2SYGC/S530-E2	125
333-2UYC/S400-A4	125
333-2UYC/S530-A3	125
333-2UYOC/S530-A3-L	125
334-15/F1C1-1XZA	125
334-15/F1C2-7VXA	125
334-15/F1C5-1RTA	125
334-15/T1C1-4WYA	125
334-15/T1C3-2TVA	125
334-15/T1C5-7QSA	125
334-15/T2C2-1TWB	125
334-15/T2C3-2TVC	125
334-15/T2C5-1QSB	125
334-15/X1C2-1UWA	125
334-15/X1C5-1QSA	125
334-15/X2C1-1WYB	125
334-15/X2C3-1TVA	125
334-15/X2C5-1PSB	125
336SURSYGW/S530-A3	124
336SYGSYGD/S530-E2	124
336UYSYGW/S530-A3	124
339-1SURSYGW/S530-A3	126
339-1UYSYGW/S530-A3	126
339-1UYUBW/S530-A4	126
3474BABR	150
3474BAGR	150
3474BARR	150
3805AUM2C/TR8-T	170
383-2SDRC/S530-A3	126
383-2SUBC/C470/S400-A6	126
383-2SUGC/S400-A4	126
383-2SURC/S530-A3	126
383-2SYGC/S530-E2	126
383-2USOC/S530-A6	126
383-2UYC/S530-A3	126
414-10SURD/S530-A3	128
414-10UYD/S530-A3	128
4204-10SURC/S530-A3	123
4204-10SYGC/S530-E4	123
42-21/BHC-AUW/1T	90
42-21A/BHC-ZV1W2N/1T	90
42-21A/GHC-YX1Y2N/1T	90
423-2SUBC/S400-X9	128
423-2SURC/S530-A3	128
423-2UYC/S530-A6	128
423-2UYOC/S530-A6	128
48-213/BHC-ZM2P1QY/3C	108
48-213/R6C-AM1N2VY/3C	108
48-213/T2D-AQ2R2QY/3C	108
48-213/T3D-AP1Q2TY/3C	108
48-213/T7D-AQ1R2QY/3C	108
484-10SURT/S530-A3	121
484-10SYGT/S530-E2	121

ALPHANUMERIC INDEX

VISIBLE LED

484-10UYOC/S530-A3 121
484-10UYT/S530-A3 121
494-10SURT/S530-A3 121
494-10SYGT/S530-E2 121
50-315Z-C80600L-C3Q6A6C42735-2T-AM 158
50-515UMRFC/1620M468C/TR8-T 165
50-615PHFC/7175M46S8C/TR8-T 164
513SURD/S530-A3 129
513SYGD/S530-E2 129
513UYD/S530-A3 129

519-1SURSYGW/S530-A3 129
523-2SDRD/S530-A3 129
523-2SUGD/S400-A6 129
523-2SURD/S530-A3 129
523-2UYD/S530-A3 129
523SYGD/S530-E2 129
5484BN/BADC-AFHA/P/MS 151
5484BN/BADC-AGJA/P/MS 151
5484BN/GADC-ALMA/P/MS 151
5484BN/GADC-AMNA/P/MS 151

5484BN/R7DC-AGJB/P/MS 151
5484BN/R7DC-AHJB/P/MS 151
57-11UTC/S827-1/TR8 118
57-21/R6C-AP1Q2B/BF 118
57-21SYGC/S530-E3/TR8 118
583SURD/S530-A3 128
583SYGD/S530-E2 128
583UYD/S530-A3 128
594SURD/S530-A3 130
594SYGD/S530-E2 130

594UYD/S530-A3 130
594UYD/S530-A3 130
62-112UHFC/2227J4E3H9C/TR8-T 166
62-113PUN2C/F90115ZN57DH-T 167
62-117B-C81000L-48A68DB7E02735-2T-AM 159
62-117B-N81000L-38A46DB7E02735-2T-AM 159
62-117B-W81000L-25A36DB7E02735-2T-AM 159
62-117D-C80650H-48A68DB4C52535-2T-AM 159
62-117D-N80650H-38A46DB4C52535-2T-AM 159
62-117D-W80650H-25A36DB4C52535-2T-AM 159

62-122UMRIC/3338LM58P8C/TR8-T 166
62-123PAUN3W/F120135VM68PBD-T 167
62-125UHBC/T7987ZM8AP9E/TR8-T 165
62-129PUHFC/T94104N47S9C-T 164
62-223PUNC/F125150ZM35SBE-T 168
62-227ET/KK7D-3M2727X2Y22530U6/2T 76
62-227ET/KK7D-3M3030X3Y32530U6/2T 76
62-227ET/KK7D-3M3535X3Y32530U6/2T 76
62-227ET/KK7D-3M4040X5Y52530U6/2T 76
62-227ET/KK7D-3M5050X6Y62530U6/2T 76

62-227ET/KK7D-3M5757X6Y62530U6/2T 76
62-227ET/KK7D-3M6565X5Y52530U6/2T 76
62-227ET/KK8D-3M2727X4Y42530U6/2T 76
62-227ET/KK8D-3M3030X5Y52530U6/2T 76
62-227ET/KK8D-3M3535X5Y52530U6/2T 76
62-227ET/KK8D-3M4040X7Y72530U6/2T 76
62-227ET/KK8D-3M5050X8Y82530U6/2T 76
62-227ET/KK8D-3M5757X8Y82530U6/2T 76
62-227ET/KK8D-3M6565X7Y72530U6/2T 76
63-119-BHD-ZM1N2TY-3T 100

63-119-T1D-AN2Q1TY-3T 100
6324-15SUBC/S400-X10 127
6324-15SUGC/S400-A5 127
6324-15SURC/S400-A9 127
6364/BADA-AHKA/P/MS 151
6364/BADA-AKMA/P/MS 151
6364/GADA-ANQA/P/MS 151
6364/GADA-AQSA/P/MS 151
6374/R7DA-AJKB/P/MS 151
6374/R7DA-AKMB/P/MS 151

6374/Y7DA-AJKB/P/MS 151
6374/Y7DA-ALNB/P/MS 151
65-11/BHC-AR1S2B2/2T 116
65-11/T2C-FV1W2E/2T 116
65-11-C70200H-PM0FK0ABCA2737-2T-AM 161
65-11-IB0100L-CM5CA0S2U22737-2T-AM 161
65-11-SB0100L-JA16JA5S2U12737-2T-AM 161
65-11-UB0200L-6375S2U12737-2T-AM 161
65-11-UG0200H-2035V1AA2737-2T-AM 161
65-21/G6C-AN2Q1/3T 116

65-21/Y2C-CJ2L2X/3T 116
65-21/Y2SC-AR1S2B/2T 116
65-21/Y2SC-FR2S1B/2T 116
65-21-UR0200H-1827V1AA1727-2T-AM 161
65-21-UY0200H-8594V1AA1727-2T-AM 161
67-01/Y2W-MV1W1/2T/MS 148
67-03A/R6GHBHW-A01/2T/MS 148
67-11/BHC-FQ2S1F/2T 116
67-11/W1C-ES1T2N/2T 116
67-11/W1C-FV1W2F/2T 116

67-11-C70200H-PM0FK0ABCA2737-2T-AM 160
67-11-C70201H-PM0FK0ABCA2737-2T-AM 157
67-11-IB0100L-CM5CA0S2U22737-2T-AM 160
67-11-SB0100L-JA16JA5S2U12737-2T-AM 160
67-11S-C80600L-48A68DA2C02735-2T-AM 160
67-11S-N80600L-38A46DA2C02735-2T-AM 160
67-11S-W80600L-25A36DA2C02735-2T-AM 160
67-11-UB0200H-6375S2U12737-2T-AM 160
67-11-UG0200H-2035V1AA2737-2T-AM 160
67-21/B3C-BN1Q2N/2T 117

67-21/B7C-AS2U1N/2T 117
67-21/GBC-YV2W2N/2T 117
67-21/GHC-AS2U1B17Z/2T 117
67-21/GHC-BV1/2T 117
67-21/R6C-AP2R1B/2T 117
67-21/R6C-FN2Q1BZ/2T 117
67-21/R6C-FR2T1B/2T 117
67-21/R6C-FS1U1B/2T 117
67-21/RSC-FT2V1B/2T 117
67-21/S2C-FQ2R2B/2T 117

67-21/S3C-AS1T1/2T 117
67-21/T2C-ZV1W2E/2T 117
67-21/Y2C-BR2T1B/2T 117
67-21/YSC-FU1V2B/2T 117
67-21S/B3C-D5060D5D72936Z6/2T 75
67-21S/HK3C-H2727L8M42936Z6/2T 68
67-21S/HK3C-H3030L9N32936Z6/2T 68
67-21S/HK3C-H3535L9N32936Z6/2T 68
67-21S/HK3C-H4040M3N42936Z6/2T 68
67-21S/HK3C-H5050M31N42936Z6/2T 68

67-21S/HK3C-H5757M31N42936Z6/2T 68
67-21S/HK3C-H6565M31N42936Z6/2T 68
67-21S/HK4C-H2727QA1R32834Z15/2T 69
67-21S/HK4C-H3030R1R42834Z15/2T 69
67-21S/HK4C-H4040R11R42834Z15/2T 69
67-21S/HK4C-H5050R2R52834Z15/2T 69
67-21S/HK4C-H5757R2R52834Z15/2T 69
67-21S/HK4C-H6565R2R52834Z15/2T 69
67-21S/KK4C-M2727V7X72532U6/2T 68
67-21S/KK4C-M3030V8X82532U6/2T 68

67-21S/KK4C-M4040V9X92532U6/2T 68
67-21S/KK4C-M5050X0Y02532U6/2T 68
67-21S/KK4C-M5757X0Y02532U6/2T 68
67-21S/KK4C-M6565V9X92532U6/2T 68
67-21S/KK5C-H2727M42N4B2833Z6/2T 68
67-21S/KK5C-H2727R2R52834Z15/2T 69
67-21S/KK5C-H3030N3N4B2833Z6/2T 68
67-21S/KK5C-H3030R3R62834Z15/2T 69
67-21S/KK5C-H3535N3N4B2833Z6/2T 68
67-21S/KK5C-H4040N31P02833Z6/2T 68

67-21S/KK5C-H4040R3R62834Z15/2T 69
67-21S/KK5C-H5050N32P02833Z6/2T 68
67-21S/KK5C-H5050R4R72834Z15/2T 69
67-21S/KK5C-H5757N32P02833Z6/2T 68
67-21S/KK5C-H5757R4R72834Z15/2T 69
67-21S/KK5C-H6060N32P02833Z6/2T 68
67-21S/KK5C-H6565N32P02833Z6/2T 68
67-21S/KK5C-H6565R4R72834Z15/2T 69
67-21S/KK6C-H2727R3R62834Z15/2T 69
67-21S/KK6C-H3030R4R72834Z15/2T 69

67-21S/KK6C-H4040R4R72834Z15/2T 69
67-21S/KK6C-H5050R5R82834Z15/2T 69
67-21S/KK6C-H5757R5R82834Z15/2T 69
67-21S/KK6C-H6565R5R82834Z15/2T 69
67-21S/NDR2C-P5080B2C12029Z6/2T 75
67-21S/NFR2C-P2050A3B21522Z6/2T 75
67-21S/R2C-D2030B8L31926Z6/2T 75
67-21S/Y2C-D8595B7L32128Z6/2T 75
67-21S/YK2C-D1720L8M42833Z6/2T 75
67-21-UR0200H-1827V1AA1727-2T-AM 160

67-21-UR0200L-1830R2T21727-2T-AM 160
67-21-UR0201H-1224V1AA1727-2T-AM 157
67-21-UY0200H-8594V1AA1727-2T-AM 160
67-21-UY0200L-8294R2T21727-2T-AM 160
67-21-UY0201H-8594V1AA1727-2T-AM 157
67-22/G3G3C-B45/2T 115
67-22/R6BHC-B07/2T 115
67-22/R6G6C-B09/2T 115
67-22/R6Y2C-B31/2T 115
67-22S/B2C-D6075D4D73037Z6/2T 75

67-22S/G2C-D1525L4L82934Z6/2T 75
67-22ST/B2C-P3545D2D92936Z6/2T 75
67-22ST/HK4C-H2727R8S25868Z15/2T 72
67-22ST/HK4C-H3030R8BS35868Z15/2T 72
67-22ST/HK4C-H4040S1S45868Z15/2T 72
67-22ST/HK4C-H5050S1S45868Z15/2T 72
67-22ST/HK4C-H5757S1S45868Z15/2T 72
67-22ST/HK4C-H6565S1S45868Z15/2T 72
67-22ST/KK4C-H2727R2R55670Z8/2T 71
67-22ST/KK4C-H2727R4R7A7A9Z3/2T 71

67-22ST/KK4C-H3030R3R65670Z8/2T	71
67-22ST/KK4C-H3030R5R8A7A9Z3/2T	71
67-22ST/KK4C-H3535R5R8A7A9Z3/2T	71
67-22ST/KK4C-H4040R3R65670Z8/2T	71
67-22ST/KK4C-H4040R5R8A7A9Z3/2T	71
67-22ST/KK4C-H5050R4R75670Z8/2T	71
67-22ST/KK4C-H5050R5BR8A7A9Z3/2T	71
67-22ST/KK4C-H5757R4R75670Z8/2T	71
67-22ST/KK4C-H5757R5BR8A7A9Z3/2T	71
67-22ST/KK4C-H6565R4R75670Z8/2T	71
67-22ST/KK4C-H6565R5R8A7A9Z3/2T	71
67-22ST/KK5C-H2727S3S75668Z15/2T	72
67-22ST/KK5C-H3030S3BS75668Z15/2T	72
67-22ST/KK5C-H3535S3BS75668Z15/2T	72
67-22ST/KK5C-H4040S3BS75668Z15/2T	72
67-22ST/KK5C-H5050S4S85668Z15/2T	72
67-22ST/KK5C-H6565S4S85668Z15/2T	72
67-22ST/KK6C-M2727X0Y02530U6/2T	70
67-22ST/KK6C-M3030X1Y12530U6/2T	70
67-22ST/KK6C-M3535X1Y12530U6/2T	70
67-22ST/KK6C-M4040X2Y22530U6/2T	70
67-22ST/KK6C-M5050X3Y32530U6/2T	70
67-22ST/KK6C-M5757X3Y32530U6/2T	70
67-22ST/KK6C-M6565X2Y22530U6/2T	70
67-22SURSYGC/ S530-A2/TR8	115
67-22UYSYGC/ S530-A5/TR8	115
67-23/R6GHBHC-B05/2T	114
67-235-BJRQGCC-A01E-2T8-CS	114
67-23SDRSYGUBC/TR8	114
67-23ST/KK3C-H2727S2S59099Z10/2T	73
67-23ST/KK3C-H3030S2BS59099Z10/2T	73
67-23ST/KK3C-H3535S2BS59099Z10/2T	73
67-23ST/KK3C-H4040S2BS59099Z10/2T	73
67-23ST/KK3C-H5050S3S69099Z10/2T	73
67-23ST/KK3C-H5757S3S69099Z10/2T	73
67-23ST/KK3C-H6565S3S69099Z10/2T	73
67-23ST/KK4C-H2727R5R88496Z6/2T	73
67-23ST/KK4C-H2727S2BS59099Z10/2T	73
67-23ST/KK4C-H3030R5BR88496Z6/2T	73
67-23ST/KK4C-H3030S3S69099Z10/2T	73
67-23ST/KK4C-H3535S3S69099Z10/2T	73
67-23ST/KK4C-H4040R6S18496Z6/2T	73
67-23ST/KK4C-H4040S3S69099Z10/2T	73
67-23ST/KK4C-H5050R6S18496Z6/2T	73
67-23ST/KK4C-H5050S3BS69099Z10/2T	73
67-23ST/KK4C-H5757R6S18496Z6/2T	73
67-23ST/KK4C-H5757S3BS69099Z10/2T	73
67-23ST/KK4C-H6060R6S18496Z6/2T	73
67-23ST/KK4C-H6565R6S18496Z6/2T	73
67-23ST/KK4C-H6565S3BS69099Z10/2T	73
67-24ST/KK4C-H27115130Z8/2T	74
67-24ST/KK4C-H30120130Z8/2T	74
67-24ST/KK4C-H35120130Z8/2T	74
67-24ST/KK4C-H40125130Z8/2T	74
67-24ST/KK4C-H50125130Z8/2T	74
67-24ST/KK4C-H57125130Z8/2T	74
67-24ST/KK4C-H65125130Z8/2T	74
67-31A/B7C-AT1U2MZ3/2T	117
67-31A/GHC-YV1W2EZ3/2T	117
67-31A/SAC-AW1X2B9Z5/2T	117
67-31-C70301H-53A64DBBCB2737-2T-AM	156
67-31E/RSC-AV1W2B9Z5/2T	118
67-31EP3-UR0500H-1224DBFB1727-BT-AM	158
67-31EP3-UY0500H-8294DBFB1727-BT-AM	158
67-31EP6-UR0500H-1224CBEB1727-BT-AM	157
67-31EP6-UY0500H-8294CAEA1727-BT-AM	157
67-31-UR0501H-1224BACA1727-2T-AM	156
67-31-UY0501H-8594ABBB1727-2T-AM	156
67-41-C70301H-53A64DBBCB2737-2T-AM	156
67-41-SR0501H-2436AAAB1727-2T-AM	156
67-41-UR0501H-1224BACA1727-2T-AM	156
67-41-UY0501H-8594ABBB1727-2T-AM	156
67-63-RGB0201H-A00-2T-AM	162
7343/BAD5-AGJA/P/MS	152
7343/GAD5-ANQA/P/MS	152
7343/R7C2-AQSB/P/MS	152
7343/R7D5-AHKB/P/MS	152
7343/Y7C2-AQSB/P/MS	152
7343-2SURC/S530-A3	127
7343-2SURC/S530-A3	127
7343-2SYGC/S530-E2	127
7343-2USOC/S530-A3	127
7344/V7C2-ASVA/P/MS	152
7344-15SUBC/C470/S400-A6	127
7344-15SUGC/S400-A5	127
7344-15SUGC/S400-X6	127
7383/BAC3-ANQA/P/MS	152
7383/G1C3-ATVA/P/MS	152
7383/R7C3-AQSB/P/MS	152
7383/R7C3-ARUB/P/MS	152
7383/V7C3-ARTA/P/MS	152
7383/Y7C3-AQSB/P/MS	152
7383/Y7C3-ARUB/P/MS	152
91-21SUBC/S400-A6/TR7	88
91-21SUGC/S400-A4/TR7	88
91-21SURC/S530-A6/TR7	88
91-21SYGC/S530-E4/TR7	88
91-21USRC/S530-A4/TR7	88
95-21SDRC/S530-A3/TR10	89
95-21SUBC/S400-A5/TR10	89
95-21SUGC/S400-A4/TR7	89
95-21SYGC/S530-E2/TR7	89
95-21USRD/S357/TR7	89
95-21UYC/S530-A5/TR7	89
99-218GUM2C/TR8-T	170
99-235/RSGHB7S1-S01/2T	149
99-616LM2C/TR8-T	169
99-713LM2C/TR8-T	169
99-826LM2C/TR8-T	169
A09K-C71501H-53A64DEAFA2737-1T-AM	155
A09K-PA1501H-YAYBDBEB2737-1T-AM	155
A09K-SR1501H-2439CADB1727-1T-AM	155
A09K-UR1501H-0921DAEA1727-1T-AM	155
A09K-UY1501H-8294CBDB1727-1T-AM	155
ALFS2A-C710001H1-64D53AL7M7-2T-AM	153
ALFS3A-C710001H1-64D53AN9O7-2T-AM	153
ALFS4A-C710001H1-64D53AP4P7-2T-AM	153
ALFS5A-C710001H1-64D53AQ2Q8-2T-AM	153
ALFSM2A-C710001H1-64D53AL7M7-1P-AM	153
ALFSM3A-C710001H1-64D53AN9O7-1P-AM	153
ALFSM4A-C710001H1-64D53AP4P7-1P-AM	153
ALFSM5A-C710001H1-64D53AQ2Q8-1P-AM	153
B1001SYGWA/S530-E2	144
B1001USOWA/S530-A4	144
B1010SURD/S530-A3	144
B1010SYGD/S530-E3	144
CH2016-C07001H-53A64DJ6K23037-2T-AM	154
CH2016-PA7001H-YAYBJ1J72941-2T-AM	154
CH2016-UR7001H-1426F6J32133-2T-AM	154
CH3535E-C03501H-53A64DF9J43040-2T-AM	154
CH3535E-PA3501H-YAYBF6F82535-2T-AM	154
CH3535E-UR3501H-1020F6F71925-2T-AM	154
CHI2024-KHAH4NG-24609-3G0T	63
CHI3030-KHAH4P7-27E19-3K0T	64
CHI3030-KHAH4S2-27L29-3Q0T	64
CHI3030-PMMB4P9-27E19-3K0T	63
D305SDRWB/S530-A3	132
D305SURWA/S530-A3	132
D306SURWA/S530-A3	132
D306USOWA/S530-A3	132
D425SDRWA/S530-A4	133
D425SURWA/S530-A3	133
D425SYGWA/S530-E2	133
D425USOWA/S530-A4	133
D426SURWB/S530-A3	133
D426SYGWA/S530-E2	133
D426USOWA/S530-A3	133
D426UYOWB/S530-A3	133
D511SURWB/S530-A3	133
D511SYGWB/S530-E2	133
D512SDRWB/S530-A3	134
D512SURWB/S530-A3	134
D512SYGWA/S530-E2	134
D512UBWA/C470	134
D515SURWA/S530-A3	134
D516SURWA/S530-A3	134
D525SURWA/S530-A3	134
D525SYGWA/S530-E2	134
D526SURWA/S530-A3	135
D526USOWA/S530-A4	135
ELAT07-KB4050J5J7293910-F1S	85
ELAT07-NB1924J4J6293910-F1M	85
ELAT07-NB5060J6J7293910-F1S	85
ELCH03-KB4050F6F8284103-N1S	84
ELCH04-NF5070F9J3294105-N1S	83
ELCH05-NB1924J3J6294310-N1S	82
ELCH05-NB5060J4J6294310-N1S	82
ELCH05-NB5065J4J6294310-N1S	83
ELCH07-NB1924J5J7283910-FCM	82
ELCH07-NB5060J6J8283910-FCS	82
ELCH07-NB5060J6J8283910-FCS	83
ELCH08-HB3545J5J7283910-FIS	85
ELCH08-KB4050J6J8283910-F1S	84
ELCH08-NB1924J6J8283910-FDM	82
ELCH08-NB5060J7J9283910-FDS	82
ELCH08-NB5060J7J9283910-FDS	83
ELCS14B-NB2025J5J7283910-F4Z	86
ELCS14B-NB5060J7J9283910-F4Z	86
ELCU02-5070J5J7294310-N1	87
ELCU03-NF5060J3J5294110-E1S	87

ALPHANUMERIC INDEX

VISIBLE LED

ELCU03-NF5060J6J8294110-E1S	87
ELDA06-HB2555J3J8293910-FCX	86
ELEM-2025F3F82838Z15-T4BN	82
ELEM-5060F4F92838Z15-T4BN	82
ELEM-5070E6F22838Z6-T2W	83
ELEM-5070F3F82838Z15-T4W	83
ELEM-KB4060E6F22838Z6-T2S	84
ELEM-KB4060F2F72838Z15-T4S	84
ELSW-E91B1-0EPNM-CB7B8	48
ELSW-F51Y1-0EPNM-AA3A6	48
ELSW-F61R1-0PPNM-AR5R6	48
ELSW-F61Y1-0EPNM-AA3A*	48
ELSW-F81O1-0EPNM-AR3R4	48
ELSW-F91O1-0EPNM-AR3R4*	48
ELSWF-J41M1-5FPHS-C2700	49
ELSWF-J41M1-5FPHS-C2700	49
ELSWF-J41M1-5FPHS-C2700	50
ELSWF-J41M1-5FPHS-C2700	50
ELSWF-J41M1-5FPHS-C3000	49
ELSWF-J41M1-5FPHS-C3000	49
ELSWF-J41M1-5FPHS-C3000	50
ELSWF-J41M1-5FPHS-C3000	50
ELSWF-J41M1-5FPHS-C3500	49
ELSWF-J41M1-5FPHS-C3500	49
ELSWF-J41M1-5FPHS-C3500	50
ELSWF-J41M1-5FPHS-C3500	50
ELSWF-J51N1-5FPHS-C4000	49
ELSWF-J51N1-5FPHS-C4000	49
ELSWF-J51N1-5FPHS-C4000	50
ELSWF-J51N1-5FPHS-C4000	50
ELSWF-J61C1-5FPHS-C5000	49
ELSWF-J61C1-5FPHS-C5000	49
ELSWF-J61C1-5FPHS-C5000	50
ELSWF-J61C1-5FPHS-C5000	50
ELSWF-J61C1-5FPHS-C5700	49
ELSWF-J61C1-5FPHS-C5700	49
ELSWF-J61C1-5FPHS-C5700	50
ELSWF-J61C1-5FPHS-C5700	50
ELSWF-J61C1-5FPHS-C6500	49
ELSWF-J61C1-5FPHS-C6500	49
ELSWF-J61C1-5FPHS-C6500	50
ELSWF-J61C1-5FPHS-C6500	50
ELSWF-J61N1-5FPGS-C4000	49
ELSWF-J61N1-5FPGS-C4000	49
ELSWF-J61N1-5FPGS-C4000	50
ELSWF-J61N1-5FPGS-C4000	50
ELSWF-J71C1-5FPGS-C5000	49
ELSWF-J71C1-5FPGS-C5000	49
ELSWF-J71C1-5FPGS-C5000	50
ELSWF-J71C1-5FPGS-C5000	50
ELSWF-J71C1-5FPGS-C5700	49
ELSWF-J71C1-5FPGS-C5700	49
ELSWF-J71C1-5FPGS-C5700	50
ELSWF-J71C1-5FPGS-C5700	50
ELSWF-J71C1-5FPGS-C6500	49
ELSWF-J71C1-5FPGS-C6500	49
ELSWF-J71C1-5FPGS-C6500	50
ELSWF-J71C1-5FPGS-C6500	50
ELSWF-JH1C1-5FPGS-C5000	49
ELSWF-JH1C1-5FPGS-C5000	49
ELSWF-JH1C1-5FPGS-C5000	50
ELSWF-JH1C1-5FPGS-C5000	50
ELSWF-JH1C1-5FPGS-C5700	49
ELSWF-JH1C1-5FPGS-C5700	49
ELSWF-JH1C1-5FPGS-C5700	50
ELSWF-JH1C1-5FPGS-C5700	50
ELSWF-JH1C1-5FPGS-C6500	49
ELSWF-JH1C1-5FPGS-C6500	49
ELSWF-JH1C1-5FPGS-C6500	50
ELSWF-JH1C1-5FPGS-C6500	50
ELSW-J21G1-0LPNM-CG1G2	48
ELSW-J31G1-0LPNM-CG1G2*	48
ELSW-Q81F1-0EPNM-HF3F8	48
ELSW-Q91F1-0EPNM-HF3F8*	48
ELSW-R11E1-0EPNM-AD3D8	48
ELSW-R21E1-0EPNM-AD3D8*	48
ELSW-R41L1-0EPNM-CB4B6	48
ELSW-R51L1-0EPNM-CB4B6*	48
ELUA-2835TGB-P6080R83240100-V21M	79
ELUC6464LUB-P7080Q45272350-SD1Q	81
ELUFA-Q30U1-0VPNE-DP2P3	77
ELUFA-Q40U1-0VPNE-DP5P6	77
ELUFA-Q40U1-0VPNE-DP7P8	77
ELUFA-Q40U1-0VPNE-DP9P0	77
ELUFA-R30U1-0VPNE-DP2P3	78
ELUFA-R40U1-0VPNE-CP5P6	78
ELUFA-R50U1-0VPNE-CP7P8	78
ELUFA-R50U1-0VPNE-CP9P0	78
ELULA-Q40U1-0VPNE-DP2P3	78
ELULA-Q50U1-0VPNE-DP5P6	78
ELULA-Q50U1-0VPNE-DP7P8	78
ELULA-Q50U1-0VPNE-DP9P0	78
ELUM3A-R51U1-0VPNE-DP2P3	80
ELUM3A-R71U1-0VPNE-CP5P6	80
ELUM3A-R71U1-0VPNE-CP7P8	80
ELUM3A-R71U1-0VPNE-CP9P0	80
ELUM5A-R51U1-0VPNE-DP2P3	80
ELUM5A-R71U1-0VPNE-CP5P6	80
ELUM5A-R71U1-0VPNE-CP7P8	80
ELUM5A-R71U1-0VPNE-CP9P0	80
ELUMA- R71U1-0VPNE-CP7P8	79
ELUMA- R71U1-0VPNE-CP9P0	79
ELUMA-R51U1-0VPNE-DP2P3	79
ELUMA-R71U1-0VPNE-CP5P6	79
ELUMFA-Q60U0-OUPNE-DP2P3(ZR)	77
ELYU03-5060J5J7294310-N0	87
ELYU03-5070J5J7294310-N0	87
F415SURWA/S530-A3	137
F415SURWB/S530-A3	137
F416SURWA/S530-A3	137
F416SURWB/S530-A3	137
F416SYGWA/S530-E3	137
F416USRWA/S530-A3	137
F511SURWA/S530-A3	137
F511SURWB/S530-A3	137
F511SYGWA/S530-E2	137
F512SDRWB/S530-A3	138
F512SURWA/S530-A3	138
F512SYGWA/S530-E2	138
GJU1215-KM27327-36106-490T	60
GJU1215-KM27327-36208-490T	60
GJU1215-KM27327-36312-490T	60
GJU1215-KM30330-36106-490T	60
GJU1215-KM30330-36208-490T	60
GJU1215-KM30330-36312-490T	60
GJU1215-KM40340-36106-490T	60
GJU1215-KM40340-36208-490T	60
GJU1215-KM40340-36312-490T	60
GJU1215-PM27327-36106-490T	60
GJU1215-PM27327-36208-490T	60
GJU1215-PM27327-36312-490T	60
GJU1215-PM30330-36106-490T	60
GJU1215-PM30330-36208-490T	60
GJU1215-PM30330-36312-490T	60
GJU1215-PM40340-36106-490T	60
GJU1215-PM40340-36208-490T	60
GJU1215-PM40340-36312-490T	60
GJU2024-KM27327-36517-4G0T	61
GJU2024-KM27327-36725-4G0T	61
GJU2024-KM27327-36A35-4G0T	62
GJU2024-KM27327-48A50-4G0T	62
GJU2024-KM30330-36517-4G0T	61
GJU2024-KM30330-36725-4G0T	61
GJU2024-KM30330-36A35-4G0T	62
GJU2024-KM30330-48A50-4G0T	62
GJU2024-KM35335-36517-4G0T	61
GJU2024-KM35335-36725-4G0T	61
GJU2024-KM35335-36A35-4G0T	62
GJU2024-KM35335-48A50-4G0T	62
GJU2024-KM40340-36517-4G0T	61
GJU2024-KM40340-36725-4G0T	61
GJU2024-KM40340-36A35-4G0T	62
GJU2024-KM40340-48A50-4G0T	62
GJU2024-PM27327-36517-4G0T	61
GJU2024-PM27327-36725-4G0T	61
GJU2024-PM27327-36A35-4G0T	62
GJU2024-PM27327-48A50-4G0T	62
GJU2024-PM30330-36517-4G0T	61
GJU2024-PM30330-36725-4G0T	61
GJU2024-PM30330-36A35-4G0T	62
GJU2024-PM30330-48A50-4G0T	62
GJU2024-PM35335-36517-4G0T	61
GJU2024-PM35335-36725-4G0T	61
GJU2024-PM35335-36A35-4G0T	62
GJU2024-PM35335-48A50-4G0T	62
GJU2024-PM40340-36517-4G0T	61
GJU2024-PM40340-36725-4G0T	61
GJU2024-PM40340-36A35-4G0T	62
GJU2024-PM40340-48A50-4G0T	62
GXUAN1313-KM27327-36103-492T	53
GXUAN1313-KM27327-36206-492T	53
GXUAN1313-KM27327-36310-492T	54
GXUAN1313-KM27327-36413-492T	54
GXUAN1313-KM30330-36103-492T	53
GXUAN1313-KM30330-36206-492T	53
GXUAN1313-KM30330-36310-492T	54
GXUAN1313-KM30330-36413-492T	54
GXUAN1313-KM35335-36103-492T	53
GXUAN1313-KM35335-36206-492T	53
GXUAN1313-KM35335-36310-492T	54

GXUAN1313-KM35335-36413-492T	54
GXUAN1313-KM40340-36103-492T	53
GXUAN1313-KM40340-36206-492T	53
GXUAN1313-KM40340-36310-492T	54
GXUAN1313-KM40340-36413-492T	54
GXUAN1313-KT50550-36103-492T	53
GXUAN1313-KT50550-36206-492T	53
GXUAN1313-KT50550-36310-492T	54
GXUAN1313-KT50550-36413-492T	54
GXUAN1313-KT57557-36103-492T	53
GXUAN1313-KT57557-36206-492T	53
GXUAN1313-KT57557-36310-492T	54
GXUAN1313-KT57557-36413-492T	54
GXUAN1313-KT65565-36103-492T	53
GXUAN1313-KT65565-36206-492T	53
GXUAN1313-KT65565-36310-492T	54
GXUAN1313-KT65565-36413-492T	54
GXUAN1313-PM27327-36103-492T	53
GXUAN1313-PM27327-36206-492T	53
GXUAN1313-PM27327-36310-492T	54
GXUAN1313-PM27327-36413-492T	54
GXUAN1313-PM30330-36103-492T	53
GXUAN1313-PM30330-36206-492T	53
GXUAN1313-PM30330-36310-492T	54
GXUAN1313-PM30330-36413-492T	54
GXUAN1313-PM35335-36103-492T	53
GXUAN1313-PM35335-36206-492T	53
GXUAN1313-PM35335-36310-492T	54
GXUAN1313-PM35335-36413-492T	54
GXUAN1313-PM40340-36103-492T	53
GXUAN1313-PM40340-36206-492T	53
GXUAN1313-PM40340-36310-492T	54
GXUAN1313-PM40340-36413-492T	54
GXUAN1919-KM27327-36516-4E2T	55
GXUAN1919-KM27327-36619-4E2T	55
GXUAN1919-KM27327-36826-4E2T	56
GXUAN1919-KM30330-36516-4E2T	55
GXUAN1919-KM30330-36619-4E2T	55
GXUAN1919-KM30330-36826-4E2T	56
GXUAN1919-KM35335-36516-4E2T	55
GXUAN1919-KM35335-36619-4E2T	55
GXUAN1919-KM35335-36826-4E2T	56
GXUAN1919-KM40340-36516-4E2T	55
GXUAN1919-KM40340-36619-4E2T	55
GXUAN1919-KM40340-36826-4E2T	56
GXUAN1919-KT50550-36516-4E2T	55
GXUAN1919-KT50550-36619-4E2T	55
GXUAN1919-KT50550-36826-4E2T	56
GXUAN1919-KT57557-36516-4E2T	55
GXUAN1919-KT57557-36619-4E2T	55
GXUAN1919-KT57557-36826-4E2T	56
GXUAN1919-KT65565-36516-4E2T	55
GXUAN1919-KT65565-36619-4E2T	55
GXUAN1919-KT65565-36826-4E2T	56
GXUAN1919-PM27327-36516-4E2T	55
GXUAN1919-PM27327-36619-4E2T	55
GXUAN1919-PM27327-36826-4E2T	56
GXUAN1919-PM30330-36516-4E2T	55
GXUAN1919-PM30330-36619-4E2T	55
GXUAN1919-PM30330-36826-4E2T	56
GXUAN1919-PM35335-36516-4E2T	55
GXUAN1919-PM35335-36619-4E2T	55
GXUAN1919-PM35335-36826-4E2T	56
GXUAN1919-PM40340-36516-4E2T	55
GXUAN1919-PM40340-36619-4E2T	55
GXUAN1919-PM40340-36826-4E2T	56
GXUAN2828-KM27327-36C38-4M2T	57
GXUAN2828-KM27327-54C58-4M2T	57
GXUAN2828-KM27327-54I86-4M2T	58
GXUAN2828-KM30330-36C38-4M2T	57
GXUAN2828-KM30330-54C58-4M2T	57
GXUAN2828-KM30330-54I86-4M2T	58
GXUAN2828-KM35335-36C38-4M2T	57
GXUAN2828-KM35335-54C58-4M2T	57
GXUAN2828-KM35335-54I86-4M2T	58
GXUAN2828-KM40340-36C38-4M2T	57
GXUAN2828-KM40340-54C58-4M2T	57
GXUAN2828-KM40340-54I86-4M2T	58
GXUAN2828-KT50550-36C38-4M2T	57
GXUAN2828-KT50550-54C58-4M2T	57
GXUAN2828-KT50550-54I86-4M2T	58
GXUAN2828-KT57557-36C38-4M2T	57
GXUAN2828-KT57557-54C58-4M2T	57
GXUAN2828-KT57557-54I86-4M2T	58
GXUAN2828-KT65565-36C38-4M2T	57
GXUAN2828-KT65565-54C58-4M2T	57
GXUAN2828-KT65565-54I86-4M2T	58
GXUAN2828-PM27327-36C38-4M2T	57
GXUAN2828-PM27327-54C58-4M2T	57
GXUAN2828-PM27327-54I86-4M2T	58
GXUAN2828-PM30330-36C38-4M2T	57
GXUAN2828-PM30330-54C58-4M2T	57
GXUAN2828-PM30330-54I86-4M2T	58
GXUAN2828-PM35335-36C38-4M2T	57
GXUAN2828-PM35335-54C58-4M2T	57
GXUAN2828-PM35335-54I86-4M2T	58
GXUAN2828-PM40340-36C38-4M2T	57
GXUAN2828-PM40340-54C58-4M2T	57
GXUAN2828-PM40340-54I86-4M2T	58
GXUAN2828-PT50550-36C38-4M2T	57
GXUAN2828-PT50550-54C58-4M2T	57
GXUAN2828-PT50550-54I86-4M2T	58
GXUAN2828-PT57557-36C38-4M2T	57
GXUAN2828-PT57557-54C58-4M2T	57
GXUAN2828-PT57557-54I86-4M2T	58
GXUAN2828-PT65565-36C38-4M2T	57
GXUAN2828-PT65565-54C58-4M2T	57
GXUAN2828-PT65565-54I86-4M2T	58
GXUAN3838-KM27327-B0IH3-4W2T	59
GXUAN3838-KM30330-B0IH3-4W2T	59
GXUAN3838-KM35335-B0IH3-4W2T	59
GXUAN3838-KM40340-B0IH3-4W2T	59
GXUAN3838-KT50550-B0IH3-4W2T	59
GXUAN3838-KT57557-B0IH3-4W2T	59
GXUAN3838-KT65565-B0IH3-4W2T	59
GXUAN3838-PM27327-B0IH3-4W2T	59
GXUAN3838-PM30330-B0IH3-4W2T	59
GXUAN3838-PM35335-B0IH3-4W2T	59
GXUAN3838-PM40340-B0IH3-4W2T	59
GXUAN3838-PT50550-B0IH3-4W2T	59
GXUAN3838-PT57557-B0IH3-4W2T	59
GXUAN3838-PT65565-B0IH3-4W2T	59
HN0507	148
HNB1921W-OS01	150
HNB2727W-OS01	150
HNB3535W-OS01	149
JHU4001-KM277J1-72101-400T	65
M2881SURWA/S530-A3	144
M2881SYGWA/S530-E2	144
M2881UYWA/S530-A3	144
S1006SDRDB/A3/S660	131
S1006SURWA/S530-A3	131
S1006SYGWA/S530-E2	131
S2326SURWA/S530-A3	132
S2326SYGWA/S530-E2	132
S2326UBWA/C470	132
S2326USOWA/S530-A4	132
S3030FPBUD2C/F120145N37BF-T	168
S315SYGWA/S530-E2	131
S321SURWA/S530-A3	131
S321USOWA/S530-A4	131
SD405SURWA/S530-A3/S290	140
SD405SYGWA/S530-E2	140
SD406SURWA/S530-A4/S290	141
SD406SYGWA/S530-E2/S290	141
SD511SYGWA/S530-E2/S290	141
SF405SURWA/S530-A3/S290	143
SF405UYOWA/A3/S290	143
SF511SURWA/S530-A3/S290	143
SF511SYGWA/S530-E2/S796	143
SF512SURWA/S530-A3/S290	143
SS205SURWA/S530-A4/S290	138
SS205SYGWA/S530-E2/S290	138
SS205UYOWA/S530-A3/S290	138
SS205UYWA/S530-A3/S290	138
SS206SYGWA/S530-E2/S290	138
SS206USRWA/S530-A3/S290	138
SS206UYWA/S530-A3/S290	138
SS405SYGWA/S530-E2	139
SS406SYGWA/S530-E2	139
SS406UBWA/C470/S290	139
SS406USRWA/S530-A3/S290	139
SS406UWWA/S290	139
SS506SURWA/S530-A4/S290	139
SS506SYGWA/S530-E2	139
SS511SURWA/S530-A3/S290	140
SS511SYGWA/S530-E2/S290	140
SS511UBWA/C470	140
SS512SURWA/S530-A3/S290	140
SS512SYGWA/S530-E2	140
ST405SUGWA/S530-A4/S290	141
ST405SURWA/S530-A3/S290	141
ST405SYGWA/S530-E2	141
ST405UYOWA/S530-A3/S290	141
ST406SURWA/S530-A3/S290	142
ST406SYGWA/S530-E2	142
ST505SYGWA/S530-E2/S290	142
ST512SURWA/S530-A3/S290	142
ST512SYGWA/S530-E2/S290	142

ALPHANUMERIC INDEX

VISIBLE LED

ST512UBWA/C470/S290	142
T315SDRWA/S530-A3	135
T315SURWA/S530-A2	135
T315SYGWA/S530-E2	135
T315UYOWA/S530-A3	135
T316SDRWA/S530-A3	135
T316SURWA/S530-A3	135
T316SYGWA/S530-E2	135
T511SUGWB/S400-A4/S800	136
T511SURWA/S530-A3	136
T511SYGWA/S530-E2	136
T511UYOWA/S530-A3	136
T512SURWA/S530-A3	136
T512SURWB/S530-A3	136
T512SYGWA/S530-E2	136
T512SYGWB/S530-E2	136
T512USOWA/S530-A4	136
T512UYOWA/S530-A3	136
TSAN0303-M-K277-EU010-D001T	51
TSAN0303-M-K307-EU010-D001T	51
TSAN0303-M-K407-EU010-D001T	51
TSAN0303-M-K507-EU010-E001T	51
TSAN0303-M-K577-EU010-E001T	51
TSAN0303-M-K657-EU010-E001T	51
TSAN0505-M-K277-EU016-D001T	52
TSAN0505-M-K307-EU016-D001T	52
TSAN0505-M-K407-EU016-D001T	52
TSAN0505-M-K507-EU016-E001T	52
TSAN0505-M-K577-EU016-E001T	52
TSAN0505-M-K657-EU016-E001T	52
TSAN33DI-M-K277-EU008-D001T	51
TSAN33DI-M-K307-EU008-D001T	51
TSAN33DI-M-K407-EU008-D001T	51
TSAN33DI-M-K507-EU008-E001T	51
TSAN33DI-M-K577-EU008-E001T	51
TSAN33DI-M-K657-EU008-E001T	51
TSAN4FFA-M-K277-EU016-E001C	52
TSAN4FFA-M-K307-EU016-E001C	52
TSAN4FFA-M-K407-EU016-E001C	52
TSAN4FFA-M-K507-EU016-F001C	52
TSAN4FFA-M-K577-EU016-F001C	52
TSAN4FFA-M-K657-EU016-F001C	52
XI3030-C03501H-53A64DJ1J62535-2T-AM	155
XI3030P/B3C-D5060T2T524322Z15/2N	67
XI3030P/D3C-P4575R4R715231Z15/2N	67
XI3030P/F3C-P1545S2S520281Z15/2N	67
XI3030P/KK5C-3M2727N41PB24301U6/2N	66
XI3030P/KK5C-3M3030N41PB24301U6/2N	66
XI3030P/KK5C-3M3535N41PB24301U6/2N	66
XI3030P/KK5C-3M4040N42PB24301U6/2N	66
XI3030P/KK5C-3M5050N42PB24301U6/2N	66
XI3030P/KK5C-3M5757N42PB24301U6/2N	66
XI3030P/KK5C-3M6565N42PB24301U6/2N	66
XI3030P/KK5C-H2727S32S756661Z15/2N	67
XI3030P/KK5C-H3030S41S756661Z15/2N	67
XI3030P/KK5C-H3535S41S756661Z15/2N	67
XI3030P/KK5C-H4040S41S756661Z15/2N	67
XI3030P/KK5C-H5050S42S856661Z15/2N	67
XI3030P/KK5C-H5757S42S856661Z15/2N	67
XI3030P/KK5C-H6565S41S856661Z15/2N	67
XI3030-PA3501H-YAYBF5F92535-2T-AM	155
XI3030-UR3501H-0621F4F81730-2T-AM	155

ALPHANUMERIC INDEX

INFRARED LED, SENSORS, COUPLERS

4N25	255
4N26	255
4N27	255
4N28	255
4N29	244
4N30	244
4N31	244
4N32	244
4N33	244
4N35	255
4N36	255
4N37	255
4N38	255
6N135	247
6N136	247
6N137	248
6N138	248
6N139	248
ALS-PD50-42C/TR8	230
ALS-PD70-01C/L664/TR7	229
ALS-PD70-01C/TR7	229
ALS-PDIC144-6C/L378	227
ALS-PDIC15-21B/TR8	228
ALS-PDIC15-21C/L230/TR8	228
ALS-PDIC17-55C/TR8	228
ALS-PDIC17-77B/TR8	229
ALS-PDIC17-77C/TR8	229
ALS-PDIC243-3B	227
ALS-PDIC243-3B/L525	227
ALS-PDIC243-3C	227
ALS-PT17-51C/L177/TR8	230
ALS-PT17-51NB/L369/TR8	230
ALS-PT19-315C/L177/TR8	230
ALS-PT204-6C/L177	226
ALS-PT243-3C/L177	226
ALS-PT333-3C/L177	226
APM-12D23-20-DF8/TR8	231
APM-16D18-00-DF8/TR8	231
BR15-22C/L586/TR8	189
CLS15-22C/L213B/TR8	232
CLS15-22C/L213G/TR8	232
CLS15-22C/L213R/TR8	232
CNY17-1	255
CNY17-2	255
CNY17-3	255
CNY17-4	255
CNY17F-1	255
CNY17F-2	255
CNY17F-3	255
CNY17F-4	255
CNY64	260
CNY65	260
EL0452	246
EL0453	246
EL0500	246
EL0501	246
EL050L	246
EL0530	246
EL0531	246
EL0600	246
EL0601	246
EL060L	246
EL0611	246
EL0630	246
EL0631	246
EL0700	247
EL0701	247
EL1010-G	254
EL1012-G	254
EL1013-G	254
EL1014-G	254
EL1017-G	254
EL1018-G	254
EL1019-G	254
EL1110-G	254
EL1112-G	254
EL1113-G	254
EL1114-G	254
EL1116-G	254
EL1117-G	254
EL1118-G	254
EL1119-G	254
EL121N	252
EL205	256
EL206	256
EL207	256
EL208	256
EL211	256
EL212	256
EL213	256
EL215	256
EL216	256
EL217	256
EL2200	250
EL2201	250
EL2202	250
EL2530	247
EL2531	247
EL2601	248
EL260L	248
EL2611	248
EL2630	248
EL2631	248
EL3010	264
EL3010(P5)	263
EL3011	264
EL3011(P5)	263
EL3012	264
EL3012(P5)	263
EL3021	264
EL3021(P5)	263
EL3022	264
EL3022(P5)	263
EL3023	264
EL3023(P5)	263
EL3031	264
EL3031(P5)	263
EL3032	264
EL3032(P5)	263
EL3033	264
EL3033(P5)	263
EL3041	264
EL3041(P5)	263
EL3042	264
EL3042(P5)	263
EL3043	264
EL3043(P5)	263
EL3051	264
EL3051(P5)	263
EL3052	264
EL3052(P5)	263
EL3053	264
EL3053(P5)	263
EL3061	264
EL3061(P5)	263
EL3062	264
EL3062(P5)	263
EL3063	264
EL3063(P5)	263
EL3081	264
EL3081(P5)	263
EL3082	264
EL3082(P5)	263
EL3083	264
EL3083(P5)	263
EL354N-G	252
EL357L	259
EL357L(A)	259
EL357L(B)	259
EL357N-G	252
EL3H4-G	253
EL3H7-G	253
EL406A	265
EL425A	265
EL440A	265
EL4502	247
EL4503	247
EL4504	247
EL452-G	243
EL460A	265
EL606A	266
EL617	251
EL625A	266
EL640A	266
EL660A	266
EL814	251
EL815	243
EL816	251
EL817	251
EL8171	259
EL817-G	251
EL825	244
EL827	256
EL840A	266
EL847	258
EL851	251
EL852	243
EL860A	266
ELD205	257
ELD206	257

ALPHANUMERIC INDEX

INFRARED LED, SENSORS, COUPLERS

ELD207	257
ELD211	257
ELD213	257
ELD217	257
ELD3H7	257
ELM3022	261
ELM3023	261
ELM3024	261
ELM3042	261
ELM3043	261
ELM3044	261
ELM3052	261
ELM3053	261
ELM3054	261
ELM3062	261
ELM3063	261
ELM3064	261
ELM3082	261
ELM3083	261
ELM3084	261
ELM452	245
ELM453	245
ELM453L	245
ELM600	245
ELM601	245
ELM611	245
ELQ3H4	258
ELQ3H7	258
ELR0223	265
ELR3223	265
ELT3021	262
ELT3022	262
ELT3023	262
ELT3041	262
ELT3042	262
ELT3043	262
ELT3051	262
ELT3052	262
ELT3053	262
ELT3061	262
ELT3062	262
ELT3063	262
ELT3081	262
ELT3082	262
ELT3083	262
ELW135	249
ELW136	249
ELW137	249
ELW2601	249
ELW2611	249
ELW4503	249
H11A1	255
H11A2	255
H11A3	255
H11A4	255
H11A5	255
H11AA1	256
H11AA2	256
H11AA3	256
H11AA4	256
H11B1	244
H11B2	244
H11B255	244
H11B3	244
H11L1	250
H11L2	250
H11L3	250
HIR11-21C/L11/TR8	181
HIR12-21C/TR8	181
HIR15-21C/TR8	181
HIR17-21C/L289/TR8	182
HIR17-21C/TR8	182
HIR19-21C/L11/TR8	182
HIR19-21C/L289/TR8	182
HIR204	174
HIR204/H0	174
HIR204C	174
HIR204C/H0	174
HIR234C	174
HIR25-21C/L423/2T	183
HIR25-21C/L423/TR8	183
HIR26-21C/L289/CT	184
HIR26-21C/L423/CT	184
HIR30-01C/S16	179
HIR323C	175
HIR323C/H0	175
HIR333/H0	175
HIR333C/H0	175
HIR36-01C/S32	179
HIR38-01C	179
HIR383C/L289	175
HIR42-21C/L289/TR8	186
HIR42-21C/TR8	186
HIR67-21C/L11/TR8	186
HIR67-21C/L289/TR8	186
HIR7323C/L599	177
HIR7373B/L289	176
HIR7373C	176
HIR7393B/L289	176
HIR7393C	176
HIR83-01B/TR8	187
HIR8323/C16	177
HIR89-01C/1R	187
HIR91-01C/L297/2T	188
HIR-C19D/090A/L682-P01/TR	190
HIR-C19D/N150/L649-P03/TR	190
HIR-C19D-1N90/L649-P03/TR	190
IR11-21C/L491/TR8	181
IR11-21C/TR8	181
IR12-206C/L268/TR8	188
IR12-21C/TR8	181
IR15-21C/TR8	181
IR16-213C/L510/TR8	182
IR17-21C/TR8	182
IR19-217C/TR8	183
IR19-21C/TR8	182
IR19-315C/TR8	183
IR204/H16/L10	174
IR204/H60	174
IR204-A	174
IR204C/H16/L10	174
IR204C-A	174
IR25-21C/TR8	183
IR26-21C/L110/TR8	184
IR26-51C/L110/TR8	184
IR26-61C/L302/TR8	184
IR26-61C/L447/TR8	184
IR26-61C/L675/TR8	184
IR26-71C/L302/TR8	185
IR26-71C/L447/S63/TR8	185
IR26-91C/L510/2D	190
IR28-01C/L491/2R	185
IR323	175
IR323/H0-A	175
IR333/H0	175
IR333/H0/L10	175
IR333-A	175
IR333C	175
IR333C/H0/L10	175
IR333C/H2	175
IR383	175
IR42-21C/TR8	186
IR533C	176
IR5443-14C/L527	178
IR57-21C/TR8	186
IR67-21C/TR8	186
IR7373C	176
IR7393C	176
IR83-01C/L491/TR8	187
IR8353-14C	177
IR8394-20C	178
IR89-01C/L447/1R	187
IR91-01C/L491/2R	188
IR91-21C	187
IR91-21C/TR10	187
IR91-21C/TR7	187
IR928-6C-F	180
IR95-21C/TR7	188
IR-C19D-N90/L562-P03/TR	190
IR-C19-N/L482-P01/TR	190
IRM-36xx(A	207
IRM-36xxJ(A	207
IRM-36xxJ2(A	207
IRM-36xxM(A	207
IRM-36xxM2(A	207
IRM-36xxM2-X(B	207
IRM-36xxM3(A	207
IRM-36xxM3-X(B	207
IRM-36xxM6(A	207
IRM-36xxM-X(B	207
IRM-36xxN3(A	207
IRM-36xxT(A	207
IRM-36xxT-X(B	207
IRM-36xxZ(A	207
IRM-37xx	210
IRM-37xxM	210
IRM-37xxM2	210
IRM-37xxM3	210
IRM-37xxN3	210
IRM-37xxT	210

INFRARED LED, SENSORS, COUPLERS

IRM-37xxZ	210
IRM-66xx	208
IRM-66xxJ	208
IRM-66xxM	208
IRM-66xxM2	208
IRM-66xxM3	208
IRM-66xxN3	208
IRM-66xxT	208
IRM-76xxN3	208
IRM-86xxM2-M	209
IRM-88xxM3	210
IRM-H2xxM2	213
IRM-H2xxM3	213
IRM-H2xxT	213
IRM-H2xxZ	213
IRM-H3xxJ	213
IRM-H3xxM3	213
IRM-H5xx	214
IRM-H5xxM	214
IRM-H5xxM3	214
IRM-H5xxT	214
IRM-H6xx	214
IRM-H6xxM	214
IRM-H6xxM3	214
IRM-H6xxT	214
IRM-H8xxJ	215
IRM-H8xxM	215
IRM-H8xxM3	215
IRM-H8xxM3-C	215
IRM-H8xxZ-C	215
IRM-H9xx	216
IRM-H9xxM3	216
IRM-H9xxT	216
IRM-V3xxM3	211
IRM-V5xx	211
IRM-V5xxM	211
IRM-V5xxM2	211
IRM-V5xxM3	211
IRM-V5xxT	211
IRM-V8xxJ	212
IRM-V8xxJ2	212
IRM-V8xxM	212
IRM-V8xxM2	212
IRM-V8xxM3	212
IRM-V8xxM3-C	212
IRM-V8xxT	212
IRR15-22C/L491/TR8	189
IRR60-48C/TR8	189
IRRG25-16C/L491/TR8	190
ITR1201SR10AR/TR	234
ITR1203DT50A/TB	237
ITR1205ST11A/TR	237
ITR1502SR40A/TR8	233
ITR1504SR10A/TR	233
ITR20001/T	236
ITR20002	236
ITR20005-F	241
ITR20402	242
ITR20403	242
ITR20501	237
ITR8010	238
ITR8102	238
ITR8104	238
ITR8105	239
ITR8307	234
ITR8307/F43	234
ITR8307/L24	234
ITR8307/L24/F43	234
ITR8307/L24/TR8	235
ITR8307/TR8	235
ITR8402-F-A	239
ITR9606-F	239
ITR9608-F	240
ITR9702-F	240
ITR9707	240
ITR9809-F/T	241
ITR9813	241
ITR9904	235
ITR9908	235
ITR9909	236
MCT2E	255
PD12-206B/L512/TR8	193
PD12-21B/L458/TR8	194
PD15-21B/TR8	194
PD15-22C/TR8	194
PD19-217B/TR8	195
PD204-6B	191
PD204-6C/L3	191
PD26-91B/L458/2C	197
PD28-01B/L609/2R	195
PD333-3B/H0/L2	192
PD333-3C/H0/L2	191
PD42-21B/TR8	196
PD42-21C/TR8	196
PD438B	193
PD438B/L1	193
PD438B/S46	193
PD438C	192
PD438C/S46	192
PD5443-3B/L2	192
PD60-48C/TR8	197
PD638B	193
PD70-01B/TR10	196
PD70-01B/TR7	195
PD70-01C/TR10	196
PD70-01C/TR7	195
PD83-01B/L458/TR8	196
PD95-21B/TR10	197
PLR135	217
PLR135/T	219
PLR135/T10	221
PLR135/T2	219
PLR135/T5	219
PLR135/T7	220
PLR135/T8	220
PLR135/T9	221
PLR137	217
PLR155	217
PLR162	218
PLR162M	218
PLR233	217
PLR237	217
PLR253	217
PLR262	218
PLT132	222
PLT133	222
PLT133/T	224
PLT133/T10B	225
PLT133/T10W	225
PLT133/T2	224
PLT133/T5P	224
PLT133/T8B	225
PLT133/T9	225
PLT137	222
PLT232/L5	222
PLT237	222
PLT262	223
PLT262M	223
PLT272/L5	223
PM-8D23-20-DF8/TR8	231
PT11-21C/L41/TR8	202
PT12-21B/TR8	202
PT12-21C/TR8	202
PT1504-6B	200
PT15-21B/TR8	202
PT15-21C/TR8	202
PT17-21B/L41/TR8	203
PT17-21C/L41/TR8	203
PT19-21B/L41/TR8	203
PT19-21C/L41/TR8	203
PT204-6B	198
PT204-6C	198
PT2559B/L2/H2-F	201
PT2559B/L2-F	201
PT26-21B/TR8	203
PT26-21C/TR8	203
PT26-51B/TR8	204
PT26-71B/TR8	204
PT28-21B/TR8	204
PT333-3B	199
PT333-3C	198
PT334-6B	199
PT334-6C	199
PT42-21B/TR8	204
PT534-6B	200
PT5529B/L2/H2-F	201
PT5529B/L2-F	201
PT57-21B/TR8	205
PT67-21B/C14/TR8	205
PT67-21C/L41/TR8	205
PT908-7B-F	200
PT908-7C-F	200
PT91-21B	206
PT91-21B/TR10	206
PT91-21B/TR7	206
PT91-21B/TR9	206
PT91-21C	206
PT91-21C/TR10	206
PT91-21C/TR7	206
PT928-6B-F	201

ALPHANUMERIC INDEX

INFRARED LED, SENSORS, COUPLERS

PT928-6C-F	201
PT968-8C	201
R908-7C-F	180
R968-8C	180
SIR11-21C/L294/TR8	181
SIR12-21C/TR8	181
SIR19-21C/TR8	182
SIR204-A	174
SIR204C	174
SIR234	174
SIR323-5	175
SIR333-A	175
SIR383C	175
SIR67-21C/TR8	186
SIR91-21C/TR7	187
SIR95-21C/TR10	188
TIL111	255
TIL113	244
TIL117	255

CONDITIONS OF RoHS

From July 1st, 2006, RoHS requires that all electrical equipment should not contain lead, mercury, cadmium, hexavalent chromium, polybrominated biphenyls (PBBs) or poly brominated diphenyl ethers (PBDEs), and the elements are restricted to certain amount (such as mercury in a wound lighting tube <5 mg, lead in CRT glass, soldering tin, etc.). Before the date every member of European Union must obey of environment on chemical regulation.

- According to RoHS part, the norm of restrict and limit used substance adopted by EVERLIGHT.

Name	Description	Criteria
Cadmium	Cadmium and its compounds must not be present in parts, components, materials or products. Cadmium and its compounds must not used as stabilizers, coloring agent or as a surface coating treatment in parts, components, materials or products.	< 5 ppm (Plastics) < 75 ppm (Metals)
Lead restrictions	Lead and/or lead compounds shall not be present in hardware components or parts, however, except solder, electrical components and interconnect materials. Lead carbonates and sulfates must not be used in any paint applied to parts, component, or products.	< 100 ppm (Plastics) < 1000 ppm (Others)
Mercury restrictions	Mercury must not be contained in any part, material, components or product, including, but not limited to switches, relays or electrical contacts. This restriction does not apply to lamps with less than 10 mg if mercury.	< 5 ppm
Hexavalent chromium (chromium VI) and hexavalent chromium compounds	Hexavalent chromium (chromium VI) and hexavalent chromium compounds must not be present in parts, components, materials or products.	< 2 ppm
Polybrominated Biphenyls (PBBs)	Plastics parts, pomponents, materials and products must not contain Polybrominated Biphenyls as flame retardants, specific PBBs, but are not limited to those listed in attachment item.	< 5 ppm
Polybrominated Diphenyl Ethers (PBDEs)	Plastic parts, components, materials and products must not contain Polybrominated Biphenyl Ethers, known as flame retardants, specific PBBEs, including, but are not limited to, those listed in attachment item.	< 5 ppm

Compliant with the following condition :

- Please visit EVERLIGHT website for more updated information about third party test reports and RoHS declarations. (www.everlight.com)

APPLICATION NOTICE

Since we are continuously improving all of our products, the information listed in this Catalogue, which includes specifications, characteristics, data, materials used, structure, etc., are subject to change without prior notice. It is necessary that you request the newest specification sheet from EVERLIGHT when you place any inquiry or purchase order.

Please carefully read the specification sheet, and confirm your acceptance of the content. EVERLIGHT does not accept any liabilities for damages occurred due to the customer's lack of confirming the newest product specification.

It is important to strictly follow the maximum limit and other important instructions listed on the specifications sheet when using EVERLIGHT's products. The following is a list of special notes for products used in specific applications. It is recommended that customers read the instructions carefully before installing the products. Again, EVERLIGHT does not accept any liabilities for any improper use of EVERLIGHT's product or failure to follow the instructions listed herein:

Special Instruction:

1. Products listed in this Catalogue are designed primarily for the application listed below:
   A : Calculators
   B : Measurement equipment
   C : AV machines
   D : QA machines
   E : Operating machines
   F : Consumer electronics
   G : Telecommunications

While products meet the application listed above, additional attention is required when products are to be utilized in the instruments listed under Special Instruction Notes 2 and 3.

2. When high reliability and safety concerns are required, it is very important that the design be made to focus on safety and long term reliability. Special care should be given to assure that EVERLIGHT's products integrate and function properly with all other parts of the instrument. Instruments fall into these categories include:

   A : Instruments attached to transportation tools (aircraft, train, automobile)
   B : Traffic signs
   C : Gas leaking detectors and gas shutters
   D : Fire detectors
   E : Other safety detectors

3. When extremely high reliability and safety concerns are required, it is necessary that you contact EVERLIGHT for additional information before use. Instruments fall into these categories include:

   A : Aerospace instruments
   B : Telecommunication tools (main line)
   C : Nuclear weapon controls
   D : Medical instruments

4. Should you have any additional questions, please contact EVERLIGHT for details.

本資料所記載之製品的規格、特性、DATA、使用原料、構造...等，有時為了改良製品，無法事前通知，而逕行與予變更。因此請務必使用最新的規格書，並請針對內容加以確認。若因未確認規格書，導致使用次製品之機器或其他應用產品發生瑕疵時，敝公司將不負此責任。

使用本資料所記載之製品時，請遵守規格書所記載之絕對最大定格，使用上之注意事項，以及下列之注意點，若因不遵守規格書所記載之絕對最大定格，使用上之注意事項，以及下述之注意點，而導致發生損害問題時，敝公司將不負此責任。

注意項目：

1. 本資料所記載之製品，原則上是為了下述之用途而製造出來的產品
   A: 電算機
   B: OA機器
   C: 通信機器
   D: 計測機器
   E: 工作機器
   F: AV機器
   G: 家電製品

若雖合乎上述用途，但是屬於下述2或3所記載之機器時，則需遵守個別產品之使用注意事項。

2. 若本資料所記載之製品用於下述講求高信賴信與安全性之用途時，因牽涉到機能與精度方面，為了維持這類機器的信賴性與安全性，請務必注重安全設計與長期性設計，並且需考慮整體機構間的關係，依機器整體之安全設計來使用。
   A: 運送機器(飛機、火車、汽車)與控制安全性等相關之產品
   B: 交通信號機
   C: 瓦斯漏氣檢測關閉機
   D: 防災裝置
   E: 各種安全裝置

3. 若本資料所記載之製品用於下述講求高信賴性與安全性之用途時，因牽涉到機能與精度方面，請事先與敝公司聯絡。
   A: 太空機器(航太儀器)
   B: 通信機器(幹線)
   C: 原子彈控制機器
   D: 醫療機器

4. 涉及上述注意事項之任何一項時，如有疑問，請和敝公司業務人員聯絡。

HIGH POWER LED (SHUEN 炫, SHWO 爍, SHWO (D) 爍 (D),SHWO (N) 爍 (N), HV, JU 炬, XUAN 煊, A22, B05)

CIE BINNING RANKS

Cool-White Bin Coordinates

5000K				
Bin	50K-1	50K-2	50K-3	50K-4
CIE X	0.346	0.338	0.337	0.345
	0.345	0.337	0.337	0.344
	0.353	0.345	0.344	0.352
	0.355	0.346	0.345	0.353
CIE Y	0.369	0.362	0.349	0.356
	0.356	0.349	0.337	0.343
	0.362	0.356	0.343	0.349
	0.376	0.369	0.356	0.362

5700K				
Bin	57K-1	57K-2	57K-3	57K-4
CIE X	0.329	0.321	0.321	0.329
	0.329	0.321	0.322	0.329
	0.337	0.329	0.329	0.337
	0.338	0.329	0.329	0.337
CIE Y	0.354	0.346	0.335	0.342
	0.342	0.335	0.324	0.331
	0.349	0.342	0.331	0.337
	0.362	0.354	0.342	0.349

6500K				
Bin	65K-1	65K-2	65K-3	65K-4
CIE X	0.312	0.303	0.305	0.313
	0.313	0.305	0.307	0.315
	0.321	0.313	0.315	0.322
	0.321	0.312	0.313	0.321
CIE Y	0.339	0.330	0.321	0.329
	0.329	0.321	0.311	0.319
	0.337	0.329	0.319	0.326
	0.348	0.339	0.329	0.337

Warm-White Bin Coordinates

2700K				
Bin	27K-1	27K-2	27K-3	27K-4
CIE X	0.469	0.456	0.447	0.459
	0.459	0.447	0.437	0.448
	0.470	0.459	0.448	0.459
	0.481	0.469	0.459	0.470
CIE Y	0.429	0.426	0.408	0.410
	0.410	0.408	0.389	0.392
	0.413	0.410	0.392	0.394
	0.432	0.429	0.410	0.413

3000K				
Bin	30K-1	30K-2	30K-3	30K-4
CIE X	0.443	0.430	0.422	0.435
	0.435	0.422	0.415	0.426
	0.447	0.435	0.426	0.437
	0.456	0.443	0.435	0.447
CIE Y	0.421	0.417	0.399	0.403
	0.403	0.399	0.381	0.385
	0.408	0.403	0.385	0.389
	0.426	0.421	0.403	0.408

3500K				
Bin	35K-1	35K-2	35K-3	35K-4
CIE X	0.415	0.400	0.394	0.408
	0.408	0.394	0.389	0.402
	0.422	0.408	0.402	0.415
	0.430	0.415	0.408	0.422
CIE Y	0.409	0.402	0.385	0.392
	0.392	0.385	0.369	0.375
	0.399	0.392	0.375	0.381
	0.417	0.409	0.392	0.399

Natural-White Bin Coordinates

4000K				
Bin	40K-1	40K-2	40K-3	40K-4
CIE X	0.387	0.374	0.370	0.383
	0.383	0.370	0.367	0.378
	0.395	0.383	0.378	0.390
	0.401	0.387	0.383	0.395
CIE Y	0.396	0.387	0.373	0.380
	0.380	0.373	0.358	0.365
	0.388	0.380	0.365	0.372
	0.404	0.396	0.380	0.388

4500K				
Bin	45K-1	45K-2	45K-3	45K-4
CIE X	0.364	0.355	0.353	0.362
	0.362	0.353	0.351	0.359
	0.370	0.362	0.359	0.367
	0.374	0.364	0.362	0.370
CIE Y	0.381	0.374	0.360	0.366
	0.366	0.360	0.347	0.352
	0.373	0.366	0.352	0.358
	0.387	0.381	0.366	0.373

■ White Color Bin Structure

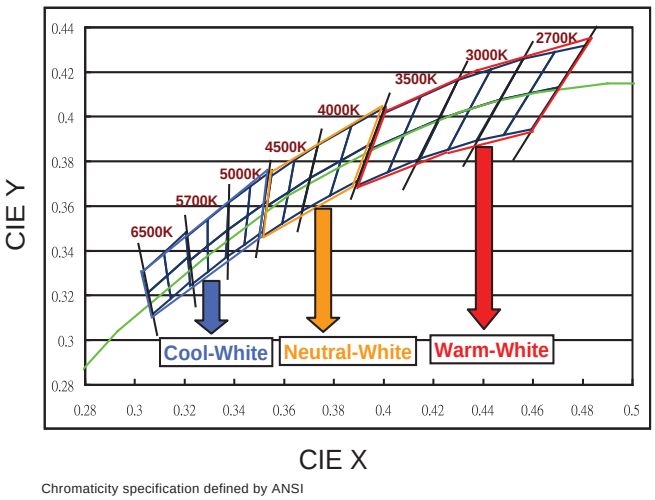

Chromaticity specification defined by ANSI

HIGH POWER LED (SHUEN 炫, SHWO 爍, SHWO (D) 爍 (D),SHWO (N) 爍 (N), HV, JU 炬, XUAN 煊, A22, B05)

BRIGHTNESS BINNING RANKS

Shuen, Shwo, Shwo (D), HV Brightness (lm)

Luminous Flux Bins

Group	Binning	Minimum Photometric Flux (lm)	Maximum Photometric Flux (lm)
E	1	4	5
	2	5	6
	3	6	8
	4	8	10
	5	10	13
	6	13	17
	7	17	20
	8	20	23
	9	23	27
F	1	27	33
	2	33	39
	3	39	45
	4	45	52
	5	52	60
	6	60	70
	7	70	80
	8	80	90
	9	90	100
J	1	100	110
	2	110	120
	3	120	130
	4	130	140
	5	140	150
	6	150	160
	7	160	180
	8	180	200
	9	200	225
K	1	225	250
	2	250	275
	3	275	300
	4	300	325
	5	325	350
	6	350	375
	7	375	400
	8	400	425
	9	425	450
N	1	450	475
	2	475	500
	3	500	525
	4	525	550

Shuen, Shwo Wavelength (nm)

Group	Binning	Minimum Dominant Wavelength (nm)	Maximum Dominant Wavelength (nm)
B Blue/ Royal-Blue	1	430	435
	2	435	440
	3	440	445
	4	445	450
	5	450	455
	6	455	460
	7	460	465
	8	465	470
G Green	1	520	525
	2	525	530
	3	530	535
	4	535	540
	5	540	545
	6	545	550
A Amber	1	580	582.5
	2	582.5	585
	3	585	587.5
	4	587.5	590
	5	590	592.5
	6	592.5	595
R Red	3	610	615
	4	615	620
	5	620	625
	6	625	630
	7	630	635
D Deep-Red	1	635	640
	2	640	645
	3	645	650
	4	650	655
	5	655	660
	6	660	665
	7	665	670
	8	670	675
F Far-Red	1	700	710
	2	710	715
	3	715	720
	4	720	725
	5	725	730
	6	730	735
	7	735	740
	8	740	745

Ju, XUAN Brightness (lm)

Luminous Flux Bins

Group	Binning	Minimum Photometric Flux (lm)	Maximum Photometric Flux (lm)
F	1	27	33
	2	33	39
	3	39	45
	4	45	52
	5	52	60
	6	60	70
	7	70	80
	8	80	90
	9	90	100
J	1	100	110
	2	110	120
	3	120	130
	4	130	140
	5	140	150
	6	150	160
	7	160	180
	8	180	200
	9	200	225
K	1	225	250
	2	250	275
	3	275	300
	4	300	325
	5	325	350
	6	350	375
	7	375	400
	8	400	425
	9	425	450
N	1	450	475
	2	475	500
	3	500	550
	4	550	600
	5	600	650
	6	650	700
	7	700	750
	8	750	800
	9	800	900
P	1	900	1000
	2	1000	1100
	3	1100	1200
	4	1200	1350
	5	1350	1500
	6	1500	1650
	7	1650	1800
	8	1800	2000
	9	2000	2200

Group	Binning	Minimum Photometric Flux (lm)	Maximum Photometric Flux (lm)
S	1	2200	2400
	2	2400	2600
	3	2600	2800
	4	2800	3000
	5	3000	3200
	6	3200	3400
	7	3400	3600
	8	3600	3800
	9	3800	4000
M	1	4000	4200
	2	4200	4400
	3	4400	4600
	4	4600	4800
	5	4800	5000
	6	5000	5200
	7	5200	5400
	8	5400	5600
	9	5600	5800
Q	1	5800	6000
	2	6000	6200
	3	6200	6400
	4	6400	6600
	5	6600	6800
	6	6800	7000
	7	7000	7200
	8	7200	7400
	9	7400	7600

HIGH POWER LED (SHUEN 炫, SHWO 爍, SHWO (D) 爍 (D), SHWO (N) 爍 (N),A22 , B05)

FORWARD VOLTAGE BINNING RANKS

A22, B05

Brightness (lm)

Luminous Flux Bins

Group	Binning	Minimum Photometric Flux (lm)	Maximum Photometric Flux (lm)
E	1	1.5	3
	2	3	4
	3	4	5
	4	5	6
	5	6	8
F	1	8	10
	2	10	13
	3	13	17
	4	17	20
	5	20	23
J	1	23	27
	2	27	33
	3	33	39
	4	39	45
	5	45	52
K	1	52	60
	2	60	70
	31	70	75
	32	75	80
	33	80	85
	41	85	90
	42	90	95
	43	95	100
	51	100	110
	52	110	120
	53	120	130
N	11	130	140
	12	140	150
	13	150	160
	21	160	180
	22	180	200
	31	200	225
	32	225	250
	41	250	275
	42	275	300
	51	300	350
	52	350	400
R	11	400	450
	12	450	500
	21	500	550
	22	550	600
	31	600	650
	32	650	700
	33	700	750
	4	750	1000
	5	1000	1300

Shuen & Shwo

Forward Voltage Bins

Group Name	Bins
A	U1+U2+U3
B	U2+U3+U4
C	V1+V2+V3
D	V2+V3+V4
E	V3+V4+V5
F	V1+V2
G	V1

Bin	Minimum Forward Voltage (V)	Maximum Forward Voltage (V)
U1	1.75	2.05
U2	2.05	2.35
U3	2.35	2.65
U4	2.65	2.95
V1	2.95	3.25
V2	3.25	3.55
V3	3.55	3.85
V4	3.85	4.15
V5	4.15	4.45

A22 (1W)

Forward Voltage Bins

Bin		Minimum Forward Voltage (V)	Maximum Forward Voltage (V)
VD		13.5	14.7
VE		14.7	15.9
VF	VF-1	15.9	16.2
	VF-2	16.2	16.5
	VF-3	16.5	16.8
	VF-4	16.8	17.1
VG	VG-1	17.1	17.4
	VG-2	17.4	17.7
	VG-3	17.7	18.0
	VG-4	18.0	18.3

Shwo (D)

Forward Voltage Bins

Group Name	Bins
A	U1+U2+U3+U4
B	U2+U3+U4+V1
C	V1+V2+V3
D	V1+V2+V3+V4

Bin	Minimum Forward Voltage (V)	Maximum Forward Voltage (V)
U1	1.75	2.05
U2	2.05	2.35
U3	2.35	2.65
U4	2.65	2.95
V1	2.95	3.25
V2	3.25	3.55
V3	3.55	3.85
V4	3.85	4.15

A22 (0.5W)

Forward Voltage Bins

Bin	Minimum Forward Voltage (V)	Maximum Forward Voltage (V)
V1	2.95	3.25
V2	3.25	3.55
V3	3.55	3.85
V4	3.85	4.15

B05

Forward Voltage Bins

Bin	Minimum Forward Voltage (V)	Maximum Forward Voltage (V)
O1	4.5	5.0
O2	5.0	5.5
O3	5.5	6.0
O4	6.0	6.5
O5	6.5	7.0
O6	7.0	7.5
O7	7.5	8.0
R1	8.0	9.0
R2	9.0	10.0
R3	10.0	11.0
R4	11.0	12.0

HIGH POWER LED (HV, JU SERIES)
FORWARD VOLTAGE BINNING RANKS

HV (1W)

Forward Voltage Bins For 110V

Group Name	Bins
A	A3+A4
B	A4+A5
C	A5+A6
D	A3+A4+A5
E	A4+A5+A6
F	A3+A4+A5+A6

Bin	Production Line	
	Minimum Voltage (V)	Maximum Voltage (V)
A1	43	45
A2	45	47
A3	47	49
A4	49	51
A5	51	53
A6	53	55
A7	55	57
A8	57	59
A9	59	61

HV (2W)

Forward Voltage Bins For 110V

Group Name	Bins
A	B3+B4
B	B4+B5
C	B5+B6
D	B3+B4+B5
E	B4+B5+B6
F	B3+B4+B5+B6

Bin	Production Line	
	Minimum Voltage (V)	Maximum Voltage (V)
B1	87	91
B2	91	95
B3	95	99
B4	99	103
B5	103	107
B6	107	111
B7	111	115
B8	115	119
B9	119	123

Ju (1215, 2024)

Forward Voltage Bins

Group	Binning	Minimum Forward Voltage(V)	Maximum Forward Voltage(V)
R	R1	9	10
	R2	10	11
	R3	11	12
	R4	12	13
	R5	13	14
	R6	14	15
	R7	15	16
	R8	16	17
	R9	17	18
T	T1	18	19
	T2	19	20
	T3	20	21
	T4	21	22
	T5	22	23
	T6	23	24
	T7	24	25
	T8	25	26
	T9	26	27
W	W1	27	29
	W2	29	31
	W3	31	33
	W4	33	35
	W5	35	37
	W6	37	39
	W7	39	41
	W8	41	43
	W9	43	45
X	X1	45	47
	X2	47	50
	X3	50	53
	X4	53	56
	X5	56	59
	X6	59	63
	X7	63	67
	X8	67	71
	X9	71	75
Y	Y1	75	79
	Y2	79	83
	Y3	83	88
	Y4	88	93
	Y5	93	98
	Y6	98	103
	Y7	103	108
	Y8	108	113

For Lighting Application Only

LOW MIDDLE POWER LED - SMD TYPE
CIE BINNING RANKS

Cool-White Bin Coordinates

5000K						
Bin	A	B	C	D	F	G
CIE X	0.3551	0.3464	0.3371	0.3533	0.3487	0.3482
	0.3464	0.3376	0.3366	0.3482	0.3425	0.3422
	0.3456	0.3371	0.3441	0.3477	0.3422	0.3418
	0.3487	0.3422	0.3448	0.3448	0.3482	0.3477
	0.3482	0.3425	0.3418	0.3441	--	--
	0.3533	0.3456	0.3422	0.3515	--	--
CIE Y	0.3760	0.3688	0.3493	0.3624	0.3629	0.3583
	0.3688	0.3616	0.3369	0.3583	0.3579	0.3533
	0.3604	0.3493	0.3428	0.3530	0.3533	0.3483
	0.3629	0.3533	0.3507	0.3507	0.3583	0.3530
	0.3583	0.3579	0.3483	0.3428	--	--
	0.3624	0.3604	0.3533	0.3487	--	--

5700K						
Bin	A	B	C	D	F	G
CIE X	0.3376	0.3292	0.3215	0.3371	0.3321	0.3321
	0.3292	0.3207	0.3222	0.3321	0.3261	0.3262
	0.3292	0.3215	0.3294	0.3320	0.3262	0.3263
	0.3321	0.3262	0.3293	0.3293	0.3321	0.3320
	0.3321	0.3261	0.3263	0.3294	--	--
	0.3371	0.3292	0.3262	0.3366	--	--
CIE Y	0.3616	0.3539	0.3353	0.3493	0.3490	0.3447
	0.3539	0.3462	0.3243	0.3447	0.3436	0.3395
	0.3464	0.3353	0.3306	0.3401	0.3395	0.3350
	0.3490	0.3395	0.3377	0.3377	0.3447	0.3401
	0.3447	0.3436	0.3350	0.3306	--	--
	0.3493	0.3464	0.3395	0.3369	--	--

6500K						
Bin	A	B	C	D	F	G
CIE X	0.3205	0.3117	0.3048	0.3213	0.3157	0.3161
	0.3117	0.3028	0.3068	0.3161	0.3093	0.3100
	0.3125	0.3048	0.3145	0.3166	0.3100	0.3106
	0.3157	0.3100	0.3136	0.3136	0.3161	0.3166
	0.3161	0.3093	0.3106	0.3145	--	--
	0.3213	0.3125	0.3100	0.3221	--	--
CIE Y	0.3481	0.3393	0.3209	0.3371	0.3360	0.3320
	0.3393	0.3304	0.3113	0.3320	0.3297	0.3259
	0.3328	0.3209	0.3187	0.3281	0.3259	0.3222
	0.3360	0.3259	0.3251	0.3251	0.3320	0.3281
	0.3320	0.3297	0.3222	0.3187	--	--
	0.3371	0.3328	0.3259	0.3261	--	--

Warm-White Bin Coordinates

2700K						
Bin	A	B	C	D	F	G
CIE X	0.4813	0.4687	0.4465	0.4700	0.4667	0.4627
	0.4687	0.4562	0.4373	0.4627	0.4576	0.4539
	0.4621	0.4465	0.4483	0.4588	0.4539	0.4502
	0.4667	0.4539	0.4544	0.4544	0.4627	0.4588
	0.4627	0.4576	0.4502	0.4483	--	--
	0.4700	0.4621	0.4539	0.4593	--	--
CIE Y	0.4319	0.4289	0.4071	0.4126	0.4180	0.4109
	0.4289	0.4260	0.3893	0.4109	0.4158	0.4088
	0.4169	0.4071	0.3919	0.4041	0.4088	0.4020
	0.4180	0.4088	0.4030	0.4030	0.4109	0.4041
	0.4109	0.4158	0.4020	0.3919	--	--
	0.4126	0.4169	0.4088	0.3944	--	--

3000K						
Bin	A	B	C	D	F	G
CIE X	0.4562	0.4430	0.4221	0.4465	0.4422	0.4388
	0.4430	0.4299	0.4147	0.4388	0.4328	0.4297
	0.4375	0.4221	0.4259	0.4355	0.4297	0.4267
	0.4422	0.4297	0.4311	0.4311	0.4388	0.4355
	0.4388	0.4328	0.4267	0.4259	--	--
	0.4465	0.4375	0.4297	0.4373	--	--
CIE Y	0.4260	0.4212	0.3984	0.4071	0.4113	0.4043
	0.4212	0.4165	0.3814	0.4043	0.4079	0.4011
	0.4096	0.3984	0.3853	0.3977	0.4011	0.3946
	0.4113	0.4011	0.3962	0.3962	0.4043	0.3977
	0.4043	0.4079	0.3946	0.3853	--	--
	0.4071	0.4096	0.4011	0.3893	--	--

3500K						
Bin	A	B	C	D	F	G
CIE X	0.4299	0.4148	0.3943	0.4221	0.4159	0.4134
	0.4148	0.3996	0.3889	0.4134	0.4051	0.4029
	0.4106	0.3943	0.4018	0.4108	0.4029	0.4006
	0.4159	0.4029	0.4057	0.4057	0.4134	0.4108
	0.4134	0.4051	0.4006	0.4018	--	--
	0.4221	0.4106	0.4029	0.4147	--	--
CIE Y	0.4165	0.4090	0.3853	0.3984	0.4007	0.3943
	0.4090	0.4015	0.3690	0.3943	0.3954	0.3893
	0.3981	0.3853	0.3752	0.3878	0.3893	0.3829
	0.4007	0.3893	0.3853	0.3853	0.3943	0.3878
	0.3943	0.3954	0.3829	0.3752	--	--
	0.3984	0.3981	0.3893	0.3814	--	--

Natural-White Bin Coordinates

4000K						
Bin	A	B	C	D	F	G
CIE X	0.4006	0.3871	0.3703	0.3952	0.3890	0.3873
	0.3871	0.3736	0.3670	0.3873	0.3793	0.3779
	0.3843	0.3703	0.3784	0.3854	0.3779	0.3764
	0.3890	0.3779	0.3810	0.3810	0.3873	0.3854
	0.3873	0.3793	0.3764	0.3784	--	--
	0.3952	0.3843	0.3779	0.3898	--	--
CIE Y	0.4044	0.3959	0.3726	0.3880	0.3887	0.3831
	0.3959	0.3874	0.3578	0.3831	0.3828	0.3773
	0.3858	0.3726	0.3647	0.3768	0.3773	0.3713
	0.3887	0.3773	0.3741	0.3741	0.3831	0.3768
	0.3831	0.3828	0.3713	0.3647	--	--
	0.3880	0.3858	0.3773	0.3716	--	--

4500K						
Bin	A	B	C	D	F	G
CIE X	0.3736	0.3642	0.3530	0.3703	0.3658	0.3648
	0.3642	0.3548	0.3512	0.3648	0.3592	0.3584
	0.3626	0.3530	0.3591	0.3637	0.3584	0.3575
	0.3658	0.3584	0.3607	0.3607	0.3648	0.3637
	0.3648	0.3592	0.3575	0.3591	--	--
	0.3703	0.3626	0.3584	0.3670	--	--
CIE Y	0.3874	0.3805	0.3601	0.3726	0.3738	0.3686
	0.3805	0.3736	0.3465	0.3686	0.3689	0.3640
	0.3714	0.3601	0.3522	0.3630	0.3640	0.3585
	0.3738	0.3640	0.3608	0.3608	0.3686	0.3630
	0.3686	0.3689	0.3585	0.3522	--	--
	0.3726	0.3714	0.3640	0.3578	--	--

■ White Color Bin Structure

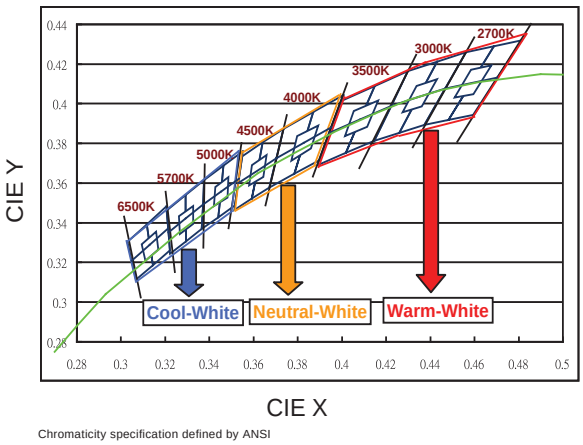

Chromaticity specification defined by ANSI

For Lighting Application Only

LOW MIDDLE POWER LED - SURFACE MOUNT PLCC TYPE LED BRIGHTNESS BINNING RANKS

Luminous Flux Bins

Unit : lm

Bin code	Range	
	Min.	Max.
D1	0.5	1.0
D2	1.0	1.5
D3	1.5	2.0
D4	2.0	2.5
D5	2.5	3.0
D6	3.0	3.5
D7	3.5	4.0
D8	4.0	4.5
D9	4.5	5.0
BA	5.0	5.5
B1	5.5	6.0
B2	6.0	6.5
B3	6.5	7.0
B4	7.0	7.5
B5	7.5	8.0
B6	8.0	8.5
B7	8.5	9.0
B8	9.0	9.5
B9	9.5	10.0
L1	10.0	11.0
L2	11.0	12.0
L3	12.0	13.0
L4	13.0	14.0
L5	14.0	15.0
L6	15.0	16.0
L7	16.0	17.0
L8	17.0	18.0
L9	18.0	19.0
M3	19.0	21.0
M4	21.0	24.0
N3	24.0	27.0
N4	27.0	33.0
P3	33.0	39.0
P4	39.0	45.0
Q3	45.0	52.0
NB	32.0	36.0
PA	36.0	40.0
PB	40.0	45.0
QA	45.0	50.0
R1	50.0	55.0
R2	55.0	60.0
R3	60.0	65.0
R4	65.0	70.0
R5	70.0	76.0
R6	76.0	83.0
R7	83.0	90.0
R8	90.0	100.0
S1	100.0	110.0
S2	110.0	120.0
S3	120.0	130.0
S4	130.0	140.0
S5	140.0	150.0
S6	150.0	160.0
S7	160.0	170.0

VF Group Bin Code

Unit : V

Forward Voltage Group		Bin	Min.	Max.
B2	B42	35	2.80	2.90
		36	2.90	3.00
		37	3.00	3.10
		38	3.10	3.20
		39	3.20	3.30
		40	3.30	3.40
		41	3.40	3.50
		42	3.50	3.60

Forward Voltage Group	Bin	Min.	Max.
5670	5#6	5.6	5.7
	5#7	5.7	5.8
	5#8	5.8	5.9
	5#9	5.9	6.0
	6#0	6.0	6.1
	6#1	6.1	6.2
	6#2	6.2	6.3
	6#3	6.3	6.4
	6#4	6.4	6.5
	6#5	6.5	6.6
	6#6	6.6	6.7
	6#7	6.7	6.8
	6#8	6.8	6.9
	6#9	6.9	7.0

Forward Voltage Group	Bin	Min.	Max.
8499	84C	8.4	8.7
	87C	8.7	9.0
	90C	9.0	9.3
	93C	9.3	9.6
	96C	9.6	9.9

SMD LED : SURFACE MOUNT CHIP LED (PCB TYPE)
BRIGHTNESS BIN SELECTION

Luminous Intensity Groups

Unit : mcd

	C0: 0.28 ... 0.45	Q ►	Q1: 72.0 ... 90.0
	D0: 0.45 ... 0.70		Q2: 90.0 ... 112
	E0: 0.70 ... 1.1	R ►	R1: 112 ... 140
	F0: 1.1 ... 1.8		R2: 140 ... 180
	G0: 1.8 ... 2.8	S ►	S1: 180 ... 225
	H0: 2.8 ... 4.5		S2: 225 ... 285
	J0: 4.5 ... 7.2	T ►	T1: 285 ... 360
	K0: 7.2 ... 11.5		T2: 360 ... 450
L ►	L1: 11.5 ... 14.5	U ►	U1: 450 ... 565
	L2: 14.5 ... 18.0		U2: 565 ... 715
M ►	M1: 18.0 ... 22.5		V0: 715 ... 1120
	M2: 22.5 ... 28.5		W0: 1120 ... 1800
N ►	N1: 28.5 ... 36.0		X0: 1800 ... 2850
	N2: 36.0 ... 45.0		Y0: 2850 ... 4500
P ►	P1: 45.0 ... 57.0		
	P2: 57.0 ... 72.0		

Note: The luminous intensity data did not include ±15% testing tolerance.

V_F (Forward Voltage Spec. Setup)

Unit : V

Forward Voltage Groups	Bin	Min.	Max.
	00	1.55	1.75
	0	1.75	1.95
C	1	1.95	2.15
C	2	2.15	2.35
C	3	2.35	2.55
	4	2.55	2.75
C	5	2.75	3.05
C	6	3.05	3.35
C	7	3.35	3.65
C	8	3.65	3.95
N K	10	2.70	2.90
N K	11	2.90	3.10
N K	12	3.10	3.30
N K	13	3.30	3.50
N	14	3.50	3.70
	15	2.70	2.85
	16	2.85	3.00
	17	3.00	3.15
	18	3.15	3.30

Note: The forward voltage data did not include ±0.1V testing tolerance.

Bin Coordinate

Group	Bin Code	CIE_X	CIE_Y
A	1	0.274	0.226
		0.274	0.258
		0.294	0.286
		0.294	0.254
	2	0.274	0.258
		0.274	0.291
		0.294	0.319
		0.294	0.286
	3	0.294	0.254
		0.294	0.286
		0.314	0.315
		0.314	0.282
	4	0.294	0.286
		0.294	0.319
		0.314	0.347
		0.314	0.315
	5	0.314	0.282
		0.314	0.315
		0.334	0.343
		0.334	0.311
	6	0.314	0.315
		0.314	0.347
		0.334	0.376
		0.334	0.343

Bin Structure (White Light)

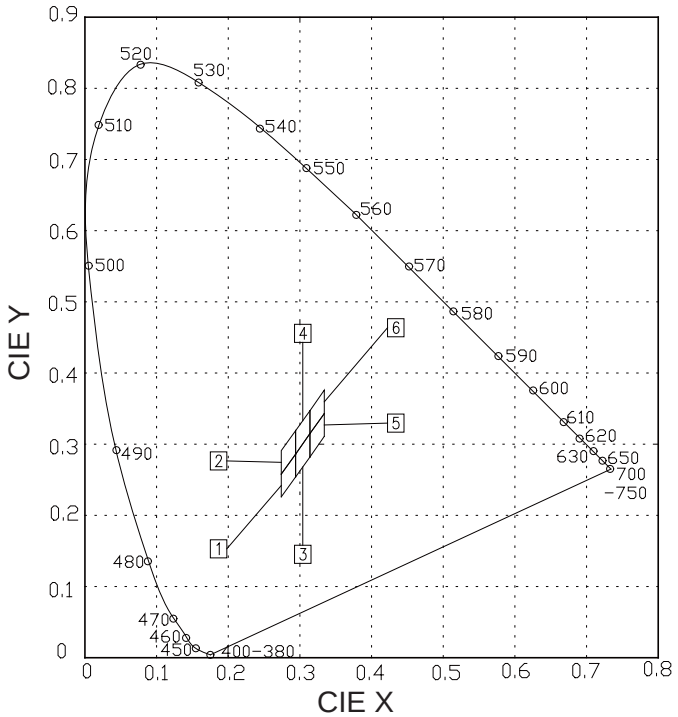

TECHNICAL DATA

For Lighting Application Only

SMD LED : SURFACE MOUNT PLCC LED (REFLECTOR) / LOW POWER LED
BRIGHTNESS BIN SELECTION

Luminous Intensity Groups

Unit : mcd

Bin Code	Min.	Max.
D1	0.5	1.0
D2	1.0	1.5
D3	1.5	2.0
D4	2.0	2.5
D5	2.5	3.0
D6	3.0	3.5
D7	3.5	4.0
D8	4.0	4.5
D9	4.5	5.0
BA	5.0	5.5
B1	5.5	6.0
B2	6.0	6.5
B3	6.5	7.0
B4	7.0	7.5
B5	7.5	8.0
B6	8.0	8.5
B7	8.5	9.0
B8	9.0	9.5
B9	9.5	10.0
L1	10.0	11.0
L2	11.0	12.0
L3	12.0	13.0
L4	13.0	14.0
L5	14.0	15.0
L6	15.0	16.0
L7	16.0	17.0
L8	17.0	18.0
L9	18.0	19.0
M3	19.0	21.0
M4	21.0	24.0
N3	24.0	27.0
N4	27.0	33.0
P3	33.0	39.0
P4	39.0	45.0
Q3	45.0	52.0

Bin Code	Min.	Max.
NB	32.0	36.0
PA	36.0	40.0
PB	40.0	45.0
QA	45.0	50.0
R1	50.0	55.0
R2	55.0	60.0
R3	60.0	65.0
R4	65.0	70.0
R5	70.0	76.0
R6	76.0	83.0
R7	83.0	90.0
R8	90.0	100.0
S1	100.0	110.0
S2	110.0	120.0
S3	120.0	130.0
S4	130.0	140.0
S5	140.0	150.0
S6	150.0	160.0
S7	160.0	170.0
S8	170.0	180.0
T1	180.0	190.0
T2	190.0	200.0
T3	200.0	220.0
T4	220.0	240.0
T5	240.0	260.0
T6	260.0	280.0
T7	280.0	300.0
T8	300.0	320.0

V_F (Forward Voltage Spec. Setup)

Unit : V (I_F=150mA)

Bin Group		Bin Code	Min.	Max.
B42		35	2.8	2.9
	B2	36	2.9	3.0
		37	3.0	3.1
		38	3.1	3.2
		39	3.2	3.3
		40	3.3	3.4
		41	3.4	3.5
		42	3.5	3.6

Table of Color Rendering Index

Symbol	Description
M	CRI(Min.) : 60
N	CRI(Min.) : 65
L	CRI(Min.) : 70
Q	CRI(Min.) : 75
K	CRI(Min.) : 80
P	CRI(Min.) : 85
H	CRI(Min.) : 90

Bin Structure

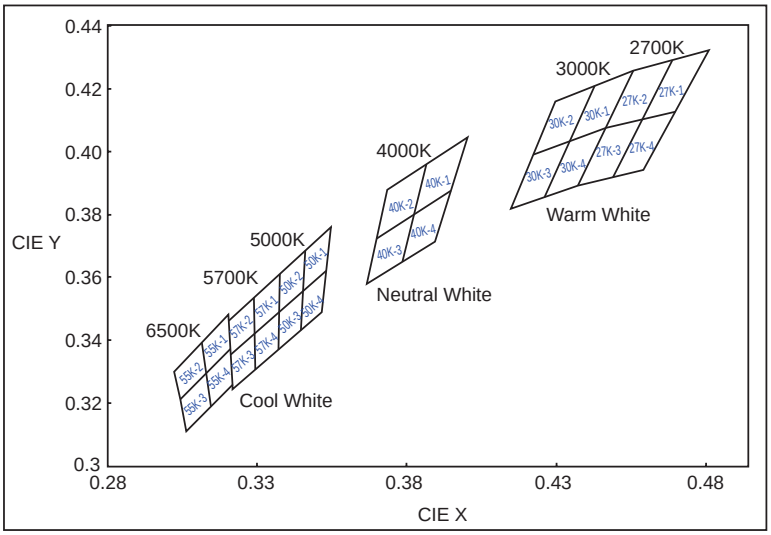

Bin Coordinate

CCT	Bin Code	CIE_x	CIE_y	Bin Code	CIE_x	CIE_y
6500K	65K-1	0.3205	0.3481	65K-3	0.3131	0.3290
		0.3117	0.3393		0.3048	0.3209
		0.3131	0.3290		0.3068	0.3113
		0.3213	0.3371		0.3145	0.3187
	65K-2	0.3117	0.3393	65K-4	0.3213	0.3371
		0.3028	0.3304		0.3131	0.3290
		0.3048	0.3209		0.3145	0.3187
		0.3131	0.3290		0.3221	0.3261
5700K	57K-1	0.3376	0.3616	57K-3	0.3293	0.3423
		0.3292	0.3539		0.3215	0.3353
		0.3293	0.3423		0.3222	0.3243
		0.3371	0.3493		0.3294	0.3306
	57K-2	0.3292	0.3539	57K-4	0.3371	0.3493
		0.3207	0.3462		0.3293	0.3423
		0.3215	0.3353		0.3294	0.3306
		0.3293	0.3423		0.3366	0.3369
5000K	50K-1	0.3551	0.3760	50K-3	0.3452	0.3558
		0.3464	0.3688		0.3371	0.3493
		0.3452	0.3558		0.3366	0.3369
		0.3533	0.3624		0.3441	0.3428
	50K-2	0.3464	0.3688	50K-4	0.3533	0.3624
		0.3376	0.3616		0.3452	0.3558
		0.3371	0.3493		0.3441	0.3428
		0.3452	0.3558		0.3515	0.3487
4000K	40K-1	0.4006	0.4044	40K-3	0.3828	0.3803
		0.3871	0.3959		0.3703	0.3726
		0.3828	0.3803		0.3670	0.3578
		0.3952	0.3880		0.3784	0.3647
	40K-2	0.3871	0.3959	40K-4	0.3952	0.3880
		0.3736	0.3874		0.3828	0.3803
		0.3703	0.3726		0.3784	0.3647
		0.3828	0.3803		0.3898	0.3716
3000K	30K-1	0.4562	0.4260	30K-3	0.4345	0.4033
		0.4431	0.4213		0.4223	0.3990
		0.4345	0.4033		0.4147	0.3814
		0.4468	0.4077		0.4260	0.3854
	30K-2	0.4431	0.4213	30K-4	0.4468	0.4077
		0.4299	0.4165		0.4345	0.4033
		0.4223	0.3990		0.4260	0.3854
		0.4345	0.4033		0.4373	0.3893
2700K	27K-1	0.4813	0.4319	27K-3	0.4585	0.4104
		0.4688	0.4290		0.4468	0.4077
		0.4585	0.4104		0.4373	0.3893
		0.4703	0.4132		0.4483	0.3919
	27K-2	0.4688	0.4290	27K-4	0.4703	0.4132
		0.4562	0.4260		0.4585	0.4104
		0.4468	0.4077		0.4483	0.3919
			0.4104			0.3944

SMD LED (99-616, 99-826, 45-21, 50-215 SERIES)
BRIGHTNESS BIN SELECTION

Chromaticity Diagram

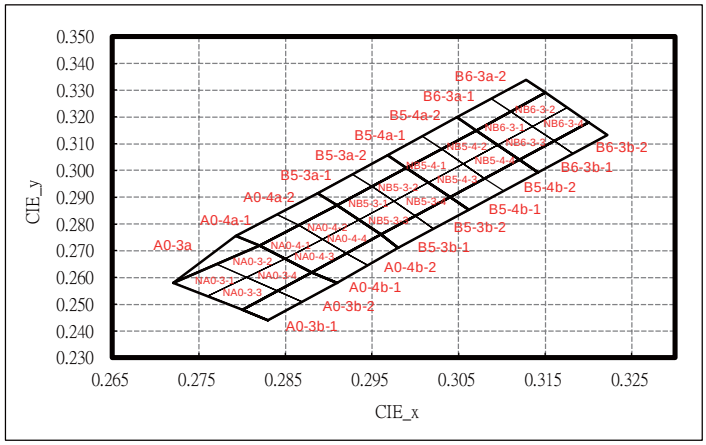

Bin Code of Chromaticity Coordinates

Bin Code	CIE_x	CIE_y	Bin Code	CIE_x	CIE_y	Bin Code	CIE_x	CIE_y	Bin Code	CIE_x	CIE_y
NA0-3-1	0.2760	0.2530	NA0-3-2	0.2805	0.2600	NA0-4-1	0.2850	0.2670	NA0-4-2	0.2893	0.2743
	0.2720	0.2580		0.2770	0.2650		0.2820	0.2720		0.2865	0.2795
	0.2770	0.2650		0.2820	0.2720		0.2865	0.2795		0.2910	0.2870
	0.2805	0.2600		0.2850	0.2670		0.2893	0.2743		0.2935	0.2815
NA0-3-3	0.2800	0.2480	NA0-3-4	0.2840	0.2550	NA0-4-3	0.2880	0.2620	NA0-4-4	0.2920	0.2690
	0.2760	0.2530		0.2805	0.2600		0.2850	0.2670		0.2893	0.2743
	0.2805	0.2600		0.2850	0.2670		0.2893	0.2743		0.2935	0.2815
	0.2840	0.2550		0.2880	0.2620		0.2920	0.2690		0.2960	0.2760
A0-3b-1	0.2830	0.2440	A0-3b-2	0.2870	0.2510	A0-4b-1	0.2910	0.2580	A0-4b-2	0.2945	0.2645
	0.2800	0.2480		0.2840	0.2550		0.2880	0.2620		0.2920	0.2690
	0.2840	0.2550		0.2880	0.2620		0.2920	0.2690		0.2960	0.2760
	0.2870	0.2510		0.2910	0.2580		0.2945	0.2645		0.2980	0.2710
A0-4a-1	0.2820	0.2720	A0-4a-2	0.2865	0.2795	B5-3a-1	0.2910	0.2870	B5-3a-2	0.2950	0.2940
	0.2793	0.2755		0.2840	0.2836		0.2887	0.2916		0.2928	0.2987
	0.2840	0.2836		0.2887	0.2916		0.2928	0.2987		0.2968	0.3058
	0.2865	0.2795		0.2910	0.2870		0.2950	0.2940		0.2990	0.3010
A0-3a	0.2720	0.2580				NB5-3-1	0.2935	0.2815	NB5-3-2	0.2975	0.2885
	0.2793	0.2755					0.2910	0.2870		0.2950	0.2940
	0.2820	0.2720					0.2950	0.2940		0.2990	0.3010
	0.2720	0.2580					0.2975	0.2885		0.3015	0.2955
Bin Code	CIE_x	CIE_y	Bin Code	CIE_x	CIE_y	Bin Code	CIE_x	CIE_y	Bin Code	CIE_x	CIE_y
NB5-3-3	0.2960	0.2760	NB5-3-4	0.3000	0.2830	B5-4b-1	0.3062	0.2853	B5-4b-2	0.3102	0.2923
	0.2935	0.2815		0.2975	0.2885		0.3040	0.2900		0.3080	0.2970
	0.2975	0.2885		0.3015	0.2955		0.3080	0.2970		0.3120	0.3040
	0.3000	0.2830		0.3040	0.2900		0.3102	0.2923		0.3142	0.2993
B5-3b-1	0.2980	0.2710	B5-3b-2	0.3021	0.2782	B6-3a-1	0.3070	0.3150	B6-3a-2	0.3110	0.3220
	0.2960	0.2760		0.3000	0.2830		0.3048	0.3198		0.3088	0.3268
	0.3000	0.2830		0.3040	0.2900		0.3088	0.3268		0.3128	0.3338
	0.3021	0.2782		0.3062	0.2853		0.3110	0.3220		0.3150	0.3290
B5-4a-1	0.2990	0.3010	B5-4a-2	0.3030	0.3080	NB6-3-1	0.3095	0.3095	NB6-3-2	0.3135	0.3165
	0.2968	0.3058		0.3008	0.3128		0.3070	0.3150		0.3110	0.3220
	0.3008	0.3128		0.3048	0.3198		0.3110	0.3220		0.3150	0.3290
	0.3030	0.3080		0.3070	0.3150		0.3135	0.3165		0.3175	0.3235
NB5-4-1	0.3015	0.2955	NB5-4-2	0.3055	0.3025	NB6-3-3	0.3120	0.3040	NB6-3-4	0.3160	0.3110
	0.2990	0.3010		0.3030	0.3080		0.3095	0.3095		0.3135	0.3165
	0.3030	0.3080		0.3070	0.3150		0.3135	0.3165		0.3175	0.3235
	0.3055	0.3025		0.3095	0.3095		0.3160	0.3110		0.3200	0.3180
NB5-4-3	0.3040	0.2900	NB5-4-4	0.3080	0.2970	B6-3b-1	0.3142	0.2993	B6-3b-2	0.3182	0.3063
	0.3015	0.2955		0.3055	0.3025		0.3120	0.3040		0.3160	0.3110
	0.3055	0.3025		0.3095	0.3095		0.3160	0.3110		0.3200	0.3180
	0.3080	0.2970		0.3120	0.3040		0.3182	0.3063		0.3222	0.3133

Luminous Intensity Groups

Unit : mcd

Bin	Min.	Max.	Bin	Min.	Max.	Bin	Min.	Max.
01	500	600	23	1250	1300	45	2500	2600
02	600	630	24	1300	1350	46	2600	2700
03	630	660	25	1350	1400	47	2700	2800
04	660	690	26	1400	1450	48	2800	2900
05	690	720	27	1450	1500	49	2900	3000
06	720	750	28	1500	1550	50	3000	3100
07	750	780	29	1550	1600	51	3100	3200
08	780	810	30	1600	1650			
09	810	840	31	1650	1700			
10	840	870	32	1700	1750			
11	870	900	33	1750	1800			
12	900	930	34	1800	1850			
13	930	960	35	1850	1900	H42	2200	2250
14	960	990	36	1900	1950	H43	2250	2300
15	990	1020	37	1950	2000	H44	2300	2350
16	1020	1050	38	2000	2050	H45	2350	2400
17	1050	1080	39	2050	2100	H46	2400	2450
18	1080	1110	40	2100	2150	H47	2450	2500
19	1110	1140	41	2150	2200	H48	2500	2550
20	1140	1170	42	2200	2300	H49	2550	2600
21	1170	1200	43	2300	2400	H50	2600	2650
22	1200	1250	44	2400	2500	H51	2650	2700

Note: Tolerance of Luminous Intensity: ±7%.

Luminous Flux

Unit : lm

Bin	Min.	Max.
40	4.00	4.25
42	4.25	4.50
45	4.50	4.75
47	4.75	5.00
50	5.00	5.25
52	5.25	5.50
55	5.50	5.75
57	5.75	6.00
60	6.00	6.25
62	6.25	6.50
65	6.50	6.75
67	6.75	7.00
70	7.00	7.25
72	7.25	7.50
75	7.50	7.75
77	7.75	8.00
80	8.00	8.25
82	8.25	8.50

V_F (Forward Voltage Spec. Setup)

Unit : V

Groups	Bin	Min.	Max.	Groups	Bin	Min.	Max.	Groups	Bin	Min.	Max.
0 2 3 4 5 6 7	6-1	2.95	3.05		6-1-1	2.95	3.00		6-11	3.00	3.05
	6-2	3.05	3.15		6-1-2	3.00	3.05		6-2	3.05	3.15
	7-1	3.15	3.25		6-2-1	3.05	3.10		7-1	3.15	3.25
	7-2	3.25	3.35		6-2-2	3.10	3.15		7-2	3.25	3.35
	8-1	3.35	3.45		7-1-1	3.15	3.20		8-1	3.35	3.45
	8-2	3.45	3.55		7-1-2	3.20	3.25		8-11	3.45	3.50
	9-1	3.55	3.65		7-2-1	3.25	3.30				
	9-2	3.65	3.75		7-2-2	3.30	3.35				
					8-1-1	3.35	3.40				
					8-1-2	3.40	3.45				

Groups	Bin	Min.	Max.
W N K C	4-2-3	2.7	2.8
	5-1-3	2.8	2.9
	5-2-3	2.9	3.0
	6-1-3	3.0	3.1
	6-2-3	3.1	3.2
	7-1-3	3.2	3.3
	7-2-3	3.3	3.4
	8-1-3	3.4	3.5

Note: Tolerance of Forward Voltage: ±0.05V.

SMD LED (99-713 SERIES)
BRIGHTNESS BIN SELECTION

Chromaticity Diagram

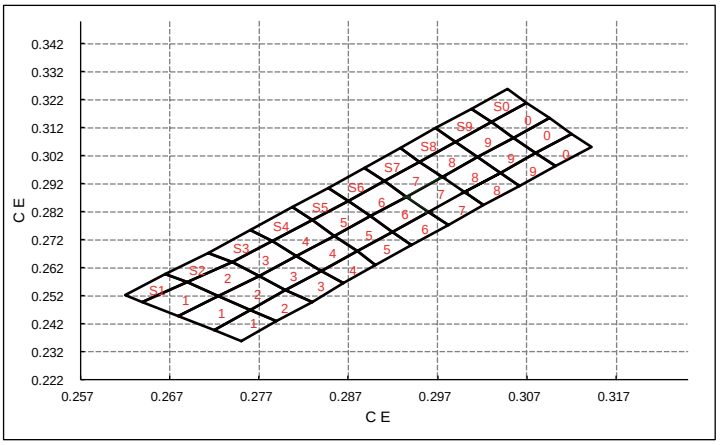

Bin Code of Chromaticity Coordinates

Bin	CIE_x	CIE_y	Bin	CIE_x	CIE_y	Bin	CIE_x	CIE_y	Bin	CIE_x	CIE_y	Bin	CIE_x	CIE_y
S1	0.2665	0.2600	S2	0.2713	0.2675	S3	0.2740	0.2640	S4	0.2785	0.2715	S5	0.2830	0.2790
	0.2690	0.2570		0.2740	0.2640		0.2713	0.2675		0.2760	0.2756		0.2807	0.2836
	0.2640	0.2500		0.2690	0.2570		0.2760	0.2756		0.2807	0.2836		0.2848	0.2907
	0.2620	0.2525		0.2665	0.2600		0.2785	0.2715		0.2830	0.2790		0.2870	0.2860
T1	0.2680	0.2450	T2	0.2725	0.2520	T3	0.2770	0.2590	T4	0.2813	0.2663	T5	0.2855	0.2735
	0.2640	0.2500		0.2690	0.2570		0.2740	0.2640		0.2785	0.2715		0.2830	0.2790
	0.2690	0.2570		0.2740	0.2640		0.2785	0.2715		0.2830	0.2790		0.2870	0.2860
	0.2725	0.2520		0.2770	0.2590		0.2813	0.2663		0.2855	0.2735		0.2895	0.2805
U1	0.2720	0.2400	U2	0.2760	0.2470	U3	0.2800	0.2540	U4	0.2840	0.2610	U5	0.2880	0.2680
	0.2680	0.2450		0.2725	0.2520		0.2770	0.2590		0.2813	0.2663		0.2855	0.2735
	0.2725	0.2520		0.2770	0.2590		0.2813	0.2663		0.2855	0.2735		0.2895	0.2805
	0.2760	0.2470		0.2800	0.2540		0.2840	0.2610		0.2880	0.2680		0.2920	0.2750
V1	0.2750	0.2360	V2	0.2790	0.2430	V3	0.2830	0.2500	V4	0.2865	0.2565	V5	0.2900	0.2630
	0.2720	0.2400		0.2760	0.2470		0.2800	0.2540		0.2840	0.2610		0.2880	0.2680
	0.2760	0.2470		0.2800	0.2540		0.2840	0.2610		0.2880	0.2680		0.2920	0.2750
	0.2790	0.2430		0.2830	0.2500		0.2865	0.2565		0.2900	0.2630		0.2941	0.2702
Bin	CIE_x	CIE_y	Bin	CIE_x	CIE_y	Bin	CIE_x	CIE_y	Bin	CIE_x	CIE_y	Bin	CIE_x	CIE_y
S6	0.2870	0.2860	S7	0.2910	0.2930	S8	0.2950	0.3000	S9	0.2990	0.3070	S0	0.3030	0.3140
	0.2848	0.2907		0.2888	0.2978		0.2928	0.3048		0.2968	0.3118		0.3008	0.3188
	0.2888	0.2978		0.2928	0.3048		0.2968	0.3118		0.3008	0.3188		0.3048	0.3258
	0.2910	0.2930		0.2950	0.3000		0.2990	0.3070		0.3030	0.3140		0.3070	0.3210
T6	0.2895	0.2805	T7	0.2935	0.2875	T8	0.2975	0.2945	T9	0.3015	0.3015	T0	0.3055	0.3085
	0.2870	0.2860		0.2910	0.2930		0.2950	0.3000		0.2990	0.3070		0.3030	0.3140
	0.2910	0.2930		0.2950	0.3000		0.2990	0.3070		0.3030	0.3140		0.3070	0.3210
	0.2935	0.2875		0.2975	0.2945		0.3015	0.3015		0.3055	0.3085		0.3095	0.3155
U6	0.2920	0.2750	U7	0.2960	0.2820	U8	0.3000	0.2890	U9	0.3040	0.2960	U0	0.3080	0.3030
	0.2895	0.2805		0.2935	0.2875		0.2975	0.2945		0.3015	0.3015		0.3055	0.3085
	0.2935	0.2875		0.2975	0.2945		0.3015	0.3015		0.3055	0.3085		0.3095	0.3155
	0.2960	0.2820		0.3000	0.2890		0.3040	0.2960		0.3080	0.3030		0.3120	0.3100
V6	0.2941	0.2702	V7	0.2982	0.2773	V8	0.3000	0.2890	V9	0.3062	0.2913	V0	0.3102	0.2983
	0.2920	0.2750		0.2960	0.2820		0.3040	0.2960		0.3040	0.2960		0.3080	0.3030
	0.2960	0.2820		0.3000	0.2890		0.3062	0.2913		0.3080	0.3030		0.3120	0.3100
	0.2982	0.2773		0.3022	0.2843		0.3022	0.2843		0.3102	0.2983		0.3142	0.3053

Luminous Intensity Groups

Unit : mcd

Bin	Min.	Max.	Bin	Min.	Max.	Bin	Min.	Max.
01	500	600	1	0	50	45	0	100
02	600	630	2	50	100	46	100	200
03	630	660	3	100	150	47	200	300
04	660	690	4	150	200	48	300	400
05	690	720	5	200	250	49	400	500
06	720	750	28	250	300	50	500	600
07	750	780	29	300	350	51	600	700
08	780	810	30	350	400	52	700	800
09	810	840	31	400	450	H40	2100	2150
10	840	870	32	450	500	H41	2150	2200
11	870	900	33	500	550	H42	2200	2250
12	900	930	34	550	600	H43	2250	2300
13	930	960	35	600	650	H44	2300	2350
14	960	990	36	650	700	H45	2350	2400
15	990	1020	37	700	750	H46	2400	2450
16	1020	1050	38	750	800	H47	2450	2500
17	1050	1080	39	800	850	H48	2500	2550
18	1080	1110	40	850	900	H49	2550	2600
19	1110	1140	41	900	950	H50	2600	2650
20	1140	1170	42	950	1050	H51	2650	2700
21	1170	1200	43	1050	1150	H52	2700	2750

Note: Tolerance of Luminous Intensity: ±7%.

Luminous Flux

Unit : lm

Bin	Min.	Max.
40	4.00	4.25
42	4.25	4.50
45	4.50	4.75
47	4.75	5.00
50	5.00	5.25
52	5.25	5.50
55	5.50	5.75
57	5.75	6.00
60	6.00	6.25
62	6.25	6.50
65	6.50	6.75
67	6.75	7.00
70	7.00	7.25
72	7.25	7.50
75	7.50	7.75
77	7.75	8.00
80	8.00	8.25
82	8.25	8.50

V_F (Forward Voltage Spec. Setup)

Unit : V

Bin	Min.	Max.
A	2.70	2.75
B	2.75	2.80
C	2.80	2.85
D	2.85	2.90
E	2.90	2.95
F	2.95	3.00
G	3.00	3.05
H	3.05	3.10
I	3.10	3.15
J	3.15	3.20
K	3.20	3.25
L	3.25	3.30
M	3.30	3.35
N	3.35	3.40
O	3.40	3.45
P	3.45	3.50
Q	3.50	3.55
R	3.55	3.60
S	3.60	3.65
T	3.65	3.70
U	3.70	3.75
V	3.75	3.80

Note: Tolerance of Forward Voltage: ±0.05V.

SMD LED (50-315 SERIES)
BRIGHTNESS BIN SELECTION

Chromaticity Diagram

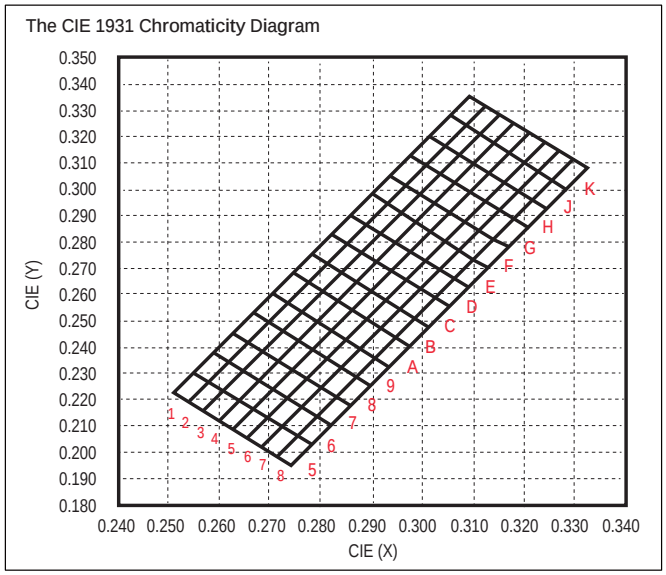

Bin Code of Chromaticity Coordinates

Bin	CIE_x	CIE_y	Bin	CIE_x	CIE_y	Bin	CIE_x	CIE_y
A1	0.2731	0.2569	B1	0.2770	0.2644	C1	0.2809	0.2719
	0.2702	0.2603		0.2741	0.2678		0.2780	0.2753
	0.2741	0.2678		0.2780	0.2753		0.2819	0.2828
	0.2770	0.2644		0.2809	0.2719		0.2848	0.2794
A2	0.2760	0.2535	B2	0.2799	0.2610	C2	0.2838	0.2685
	0.2731	0.2569		0.2770	0.2644		0.2809	0.2719
	0.2770	0.2644		0.2809	0.2719		0.2848	0.2794
	0.2799	0.2610		0.2838	0.2685		0.2877	0.2760
A3	0.2789	0.2501	B3	0.2828	0.2576	C3	0.2867	0.2651
	0.2760	0.2535		0.2799	0.2610		0.2838	0.2685
	0.2799	0.2610		0.2838	0.2685		0.2877	0.2760
	0.2828	0.2576		0.2867	0.2651		0.2906	0.2726
A4	0.2818	0.2467	B4	0.2856	0.2539	C4	0.2895	0.2614
	0.2789	0.2501		0.2828	0.2576		0.2867	0.2651
	0.2828	0.2576		0.2867	0.2651		0.2906	0.2726
	0.2856	0.2539		0.2895	0.2614		0.2934	0.2689
A5	0.2847	0.2433	B5	0.2885	0.2505	C5	0.2924	0.2580
	0.2818	0.2467		0.2856	0.2539		0.2895	0.2614
	0.2856	0.2539		0.2895	0.2614		0.2934	0.2689
	0.2885	0.2505		0.2924	0.2580		0.2963	0.2655
A6	0.2876	0.2399	B6	0.2915	0.2474	C6	0.2954	0.2549
	0.2847	0.2433		0.2885	0.2505		0.2924	0.2580
	0.2885	0.2505		0.2924	0.2580		0.2963	0.2655
	0.2915	0.2474		0.2954	0.2549		0.2992	0.2621
A7	0.2905	0.2365	B7	0.2944	0.2440	C7	0.2983	0.2515
	0.2876	0.2399		0.2915	0.2474		0.2954	0.2549
	0.2915	0.2474		0.2954	0.2549		0.2992	0.2621
	0.2944	0.2440		0.2983	0.2515		0.3021	0.2587
A8	0.2934	0.2331	B8	0.2973	0.2406	C8	0.3012	0.2481
	0.2905	0.2365		0.2944	0.2440		0.2983	0.2515
	0.2944	0.2440		0.2983	0.2515		0.3021	0.2587
	0.2973	0.2406		0.3012	0.2481		0.3051	0.2556

Bin	CIE_x	CIE_y	Bin	CIE_x	CIE_y	Bin	CIE_x	CIE_y	Bin	CIE_x	CIE_y	Bin	CIE_x	CIE_y	Bin	CIE_x	CIE_y	Bin	CIE_x	CIE_y
D1	0.2848	0.2794	E1	0.2887	0.2869	F1	0.2926	0.2944	G1	0.2965	0.3019	H1	0.3004	0.3094	J1	0.3043	0.3169	K1	0.3082	0.3244
	0.2819	0.2828		0.2858	0.2903		0.2897	0.2978		0.2936	0.3053		0.2975	0.3128		0.3014	0.3203		0.3053	0.3278
	0.2858	0.2903		0.2897	0.2978		0.2936	0.3053		0.2975	0.3128		0.3014	0.3203		0.3053	0.3278		0.3092	0.3353
	0.2887	0.2869		0.2926	0.2944		0.2965	0.3019		0.3004	0.3094		0.3043	0.3169		0.3082	0.3244		0.3121	0.3319
D2	0.2877	0.2760	E2	0.2916	0.2835	F2	0.2955	0.2910	G2	0.2994	0.2985	H2	0.3033	0.3060	J2	0.3072	0.3135	K2	0.3111	0.3210
	0.2848	0.2794		0.2887	0.2869		0.2926	0.2944		0.2965	0.3019		0.3004	0.3094		0.3043	0.3169		0.3082	0.3244
	0.2887	0.2869		0.2926	0.2944		0.2965	0.3019		0.3004	0.3094		0.3043	0.3169		0.3082	0.3244		0.3121	0.3319
	0.2916	0.2835		0.2955	0.2910		0.2994	0.2985		0.3033	0.3060		0.3072	0.3135		0.3111	0.3210		0.3150	0.3285
D3	0.2906	0.2726	E3	0.2945	0.2801	F3	0.2984	0.2876	G3	0.3023	0.2951	H3	0.3062	0.3026	J3	0.3101	0.3101	K3	0.3140	0.3176
	0.2877	0.2760		0.2916	0.2835		0.2955	0.2910		0.2994	0.2985		0.3033	0.3060		0.3072	0.3135		0.3111	0.3210
	0.2916	0.2835		0.2955	0.2910		0.2994	0.2985		0.3033	0.3060		0.3072	0.3135		0.3111	0.3210		0.3150	0.3285
	0.2945	0.2801		0.2984	0.2876		0.3023	0.2951		0.3062	0.3026		0.3101	0.3101		0.3140	0.3176		0.3179	0.3251
D4	0.2934	0.2689	E4	0.2973	0.2764	F4	0.3012	0.2839	G4	0.3051	0.2914	H4	0.3090	0.2989	J4	0.3129	0.3064	K4	0.3168	0.3139
	0.2906	0.2726		0.2945	0.2801		0.2984	0.2876		0.3023	0.2951		0.3062	0.3026		0.3101	0.3101		0.3140	0.3176
	0.2945	0.2801		0.2984	0.2876		0.3023	0.2951		0.3062	0.3026		0.3101	0.3101		0.3140	0.3176		0.3179	0.3251
	0.2973	0.2764		0.3012	0.2839		0.3051	0.2914		0.3090	0.2989		0.3129	0.3064		0.3168	0.3139		0.3207	0.3214
D5	0.2963	0.2655	E5	0.3002	0.2730	F5	0.3041	0.2805	G5	0.3080	0.2880	H5	0.3119	0.2955	J5	0.3158	0.3030	K5	0.3197	0.3105
	0.2934	0.2689		0.2973	0.2764		0.3012	0.2839		0.3051	0.2914		0.3090	0.2989		0.3129	0.3064		0.3168	0.3139
	0.2973	0.2764		0.3012	0.2839		0.3051	0.2914		0.3090	0.2989		0.3129	0.3064		0.3168	0.3139		0.3207	0.3214
	0.3002	0.2730		0.3041	0.2805		0.3080	0.2880		0.3119	0.2955		0.3158	0.3030		0.3197	0.3105		0.3236	0.3180
D6	0.2992	0.2621	E6	0.3031	0.2696	F6	0.3070	0.2771	G6	0.3109	0.2846	H6	0.3148	0.2921	J6	0.3187	0.2996	K6	0.3226	0.3071
	0.2963	0.2655		0.3002	0.2730		0.3041	0.2805		0.3080	0.2880		0.3119	0.2955		0.3158	0.3030		0.3197	0.3105
	0.3002	0.2730		0.3041	0.2805		0.3080	0.2880		0.3119	0.2955		0.3158	0.3030		0.3197	0.3105		0.3236	0.3180
	0.3031	0.2696		0.3070	0.2771		0.3109	0.2846		0.3148	0.2921		0.3187	0.2996		0.3226	0.3071		0.3265	0.3146
D7	0.3021	0.2587	E7	0.3060	0.2662	F7	0.3099	0.2737	G7	0.3138	0.2812	H7	0.3177	0.2887	J7	0.3216	0.2962	K7	0.3255	0.3037
	0.2992	0.2621		0.3031	0.2696		0.3070	0.2771		0.3109	0.2846		0.3148	0.2921		0.3187	0.2996		0.3226	0.3071
	0.3031	0.2696		0.3070	0.2771		0.3109	0.2846		0.3148	0.2921		0.3187	0.2996		0.3226	0.3071		0.3265	0.3146
	0.3060	0.2662		0.3099	0.2737		0.3138	0.2812		0.3177	0.2887		0.3216	0.2962		0.3255	0.3037		0.3294	0.3112
D8	0.3051	0.2556	E8	0.3090	0.2631	F8	0.3129	0.2706	G8	0.3168	0.2781	H8	0.3207	0.2856	J8	0.3246	0.2931	K8	0.3285	0.3006
	0.3021	0.2587		0.3060	0.2662		0.3099	0.2737		0.3138	0.2812		0.3177	0.2887		0.3216	0.2962		0.3255	0.3037
	0.3060	0.2662		0.3099	0.2737		0.3138	0.2812		0.3177	0.2887		0.3216	0.2962		0.3255	0.3037		0.3294	0.3112
	0.3090	0.2631		0.3129	0.2706		0.3168	0.2781		0.3207	0.2856		0.3246	0.2931		0.3285	0.3006			0.3081

Bin Code of Chromaticity Coordinates

Bin	CIE_x	CIE_y	Bin	CIE_x	CIE_y	Bin	CIE_x	CIE_y	Bin	CIE_x	CIE_y	Bin	CIE_x	CIE_y
51	0.2507	0.2228	61	0.2575	0.2269	71	0.2585	0.2378	81	0.2653	0.2419	91	0.2692	0.2494
	0.2536	0.2194		0.2546	0.2303		0.2614	0.2344		0.2624	0.2453		0.2663	0.2528
	0.2575	0.2269		0.2585	0.2378		0.2653	0.2419		0.2663	0.2528		0.2702	0.2603
	0.2546	0.2303		0.2614	0.2344		0.2624	0.2453		0.2692	0.2494		0.2731	0.2569
52	0.2536	0.2194	62	0.2604	0.2235	72	0.2614	0.2344	82	0.2682	0.2385	92	0.2721	0.2460
	0.2565	0.2160		0.2575	0.2269		0.2643	0.2310		0.2653	0.2419		0.2692	0.2494
	0.2604	0.2235		0.2614	0.2344		0.2682	0.2385		0.2692	0.2494		0.2731	0.2569
	0.2575	0.2269		0.2643	0.2310		0.2653	0.2419		0.2721	0.2460		0.2760	0.2535
53	0.2565	0.2160	63	0.2633	0.2201	73	0.2643	0.2310	83	0.2711	0.2351	93	0.2750	0.2426
	0.2594	0.2126		0.2604	0.2235		0.2672	0.2276		0.2682	0.2385		0.2721	0.2460
	0.2633	0.2201		0.2643	0.2310		0.2711	0.2351		0.2721	0.2460		0.2760	0.2535
	0.2604	0.2235		0.2672	0.2276		0.2682	0.2385		0.2750	0.2426		0.2789	0.2501
54	0.2594	0.2126	64	0.2662	0.2167	74	0.2672	0.2276	84	0.2740	0.2317	94	0.2779	0.2392
	0.2623	0.2092		0.2633	0.2201		0.2701	0.2242		0.2711	0.2351		0.2750	0.2426
	0.2662	0.2167		0.2672	0.2276		0.2740	0.2317		0.2750	0.2426		0.2789	0.2501
	0.2633	0.2201		0.2701	0.2242		0.2711	0.2351		0.2779	0.2392		0.2818	0.2467
55	0.2623	0.2092	65	0.2691	0.2133	75	0.2701	0.2242	85	0.2769	0.2283	95	0.2808	0.2358
	0.2652	0.2058		0.2662	0.2167		0.2730	0.2208		0.2740	0.2317		0.2779	0.2392
	0.2691	0.2133		0.2701	0.2242		0.2769	0.2283		0.2779	0.2392		0.2818	0.2467
	0.2662	0.2167		0.2730	0.2208		0.2740	0.2317		0.2808	0.2358		0.2847	0.2433
56	0.2652	0.2058	66	0.2720	0.2099	76	0.2730	0.2208	86	0.2798	0.2249	96	0.2837	0.2324
	0.2681	0.2024		0.2691	0.2133		0.2759	0.2174		0.2769	0.2283		0.2808	0.2358
	0.2720	0.2099		0.2730	0.2208		0.2798	0.2249		0.2808	0.2358		0.2847	0.2433
	0.2691	0.2133		0.2759	0.2174		0.2769	0.2283		0.2837	0.2324		0.2876	0.2399
57	0.2681	0.2024	67	0.2749	0.2065	77	0.2759	0.2174	87	0.2827	0.2215	97	0.2866	0.2290
	0.2710	0.1990		0.2720	0.2099		0.2788	0.2140		0.2798	0.2249		0.2837	0.2324
	0.2749	0.2065		0.2759	0.2174		0.2827	0.2215		0.2837	0.2324		0.2876	0.2399
	0.2720	0.2099		0.2788	0.2140		0.2798	0.2249		0.2866	0.2290		0.2905	0.2365
58	0.2710	0.1990	68	0.2778	0.2031	78	0.2788	0.2140	88	0.2856	0.2181	98	0.2895	0.2256
	0.2739	0.1956		0.2749	0.2065		0.2817	0.2106		0.2827	0.2215		0.2866	0.2290
	0.2778	0.2031		0.2788	0.2140		0.2856	0.2181		0.2866	0.2290		0.2905	0.2365
	0.2749	0.2065		0.2817	0.2106		0.2827	0.2215		0.2895	0.2256		0.2934	0.2331

Luminous Flux

Unit : lm

Bin	Min.	Max.
L11	11.00	12.00
L12	12.00	13.00
L13	13.00	14.00
L14	14.00	15.00
L15	15.00	16.00
L16	16.00	17.00
L17	17.00	18.00
L18	18.00	19.00
L19	19.00	20.00
L20	20.00	21.00
L21	21.00	22.00

Note: Tolerance of Luminous Intensity: ±7%.

V_F (Forward Voltage Spec. Setup)

Unit : V

Groups	Bin	Min.	Max.
	4-2-3	2.7	2.8
	5-1-3	2.8	2.9
K	5-2-3	2.9	3.0
	6-1-3	3.0	3.1
	6-2-3	3.1	3.2
	7-1-3	3.2	3.3
	7-2-3	3.3	3.4

SMD LED (62 SERIES)
BRIGHTNESS BIN SELECTION

Chromaticity Diagram

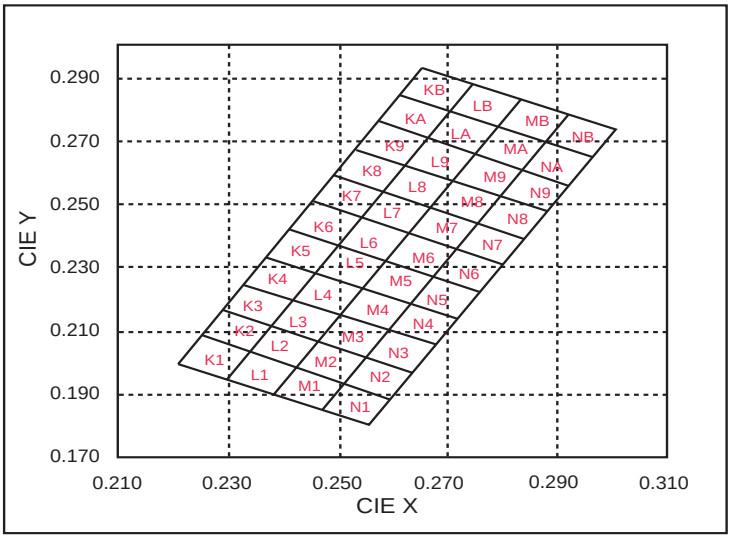

Bin Code of Chromaticity Coordinates

Bin	CIE_x	CIE_y	Bin	CIE_x	CIE_y	Bin	CIE_x	CIE_y	Bin	CIE_x	CIE_y	Bin	CIE_x	CIE_y	Bin	CIE_x	CIE_y	Bin	CIE_x	CIE_y
K1	0.2247	0.2082	K2	0.2288	0.2166	K3	0.2329	0.2250	K4	0.2457	0.2287	K5	0.2410	0.2419	K6	0.2451	0.2504	K7	0.2492	0.2588
	0.2206	0.1997		0.2247	0.2082		0.2288	0.2166		0.2416	0.2202		0.2370	0.2335		0.2410	0.2419		0.2451	0.2504
	0.2293	0.1949		0.2334	0.2034		0.2375	0.2118		0.2329	0.2250		0.2457	0.2288		0.2497	0.2371		0.2538	0.2456
	0.2334	0.2034		0.2375	0.2118		0.2416	0.2202		0.2370	0.2335		0.2497	0.2371		0.2538	0.2456		0.2579	0.2540
L1	0.2334	0.2034	L2	0.2375	0.2118	L3	0.2416	0.2202	L4	0.2544	0.2239	L5	0.2497	0.2371	L6	0.2538	0.2456	L7	0.2579	0.2540
	0.2293	0.1949		0.2334	0.2034		0.2375	0.2118		0.2503	0.2154		0.2457	0.2287		0.2497	0.2371		0.2538	0.2456
	0.2380	0.1901		0.2421	0.1986		0.2462	0.2070		0.2416	0.2202		0.2544	0.2239		0.2584	0.2323		0.2625	0.2408
	0.2421	0.1986		0.2462	0.2070		0.2503	0.2154		0.2457	0.2287		0.2584	0.2323		0.2625	0.2408		0.2666	0.2492
M1	0.2421	0.1986	M2	0.2462	0.2070	M3	0.2503	0.2154	M4	0.2631	0.2191	M5	0.2584	0.2323	M6	0.2625	0.2408	M7	0.2666	0.2492
	0.2380	0.1901		0.2421	0.1986		0.2462	0.2070		0.2590	0.2106		0.2544	0.2239		0.2584	0.2323		0.2625	0.2408
	0.2467	0.1853		0.2508	0.1938		0.2549	0.2022		0.2503	0.2154		0.2631	0.2191		0.2671	0.2275		0.2712	0.2360
	0.2508	0.1938		0.2549	0.2022		0.2590	0.2106		0.2544	0.2239		0.2671	0.2275		0.2712	0.2360		0.2753	0.2444
N1	0.2508	0.1938	N2	0.2549	0.2022	N3	0.2590	0.2106	N4	0.2718	0.2143	N5	0.2671	0.2275	N6	0.2712	0.2360	N7	0.2753	0.2444
	0.2467	0.1853		0.2508	0.1938		0.2549	0.2022		0.2677	0.2058		0.2631	0.2191		0.2671	0.2275		0.2712	0.2360
	0.2554	0.1805		0.2595	0.1890		0.2636	0.1974		0.2590	0.2106		0.2718	0.2143		0.2758	0.2227		0.2799	0.2312
	0.2595	0.1890		0.2636	0.1974		0.2677	0.2058		0.2631	0.2191		0.2758	0.2227		0.2799	0.2312		0.2840	0.2396

Bin	CIE_x	CIE_y	Bin	CIE_x	CIE_y	Bin	CIE_x	CIE_y	Bin	CIE_x	CIE_y
K8	0.2533	0.2672	K9	0.2574	0.2757	KA	0.2615	0.2842	KB	0.2656	0.2927
	0.2492	0.2588		0.2533	0.2672		0.2574	0.2757		0.2615	0.2842
	0.2579	0.2540		0.2620	0.2624		0.2661	0.2709		0.2702	0.2794
	0.2620	0.2624		0.2661	0.2709		0.2702	0.2794		0.2743	0.2879
L8	0.2620	0.2624	L9	0.2661	0.2709	LA	0.2702	0.2794	LB	0.2743	0.2879
	0.2579	0.2540		0.2620	0.2624		0.2661	0.2709		0.2702	0.2794
	0.2666	0.2492		0.2707	0.2576		0.2748	0.2661		0.2789	0.2746
	0.2707	0.2576		0.2748	0.2661		0.2789	0.2746		0.2830	0.2831
M8	0.2707	0.2576	M9	0.2748	0.2661	MA	0.2789	0.2746	MB	0.2830	0.2831
	0.2666	0.2492		0.2707	0.2576		0.2748	0.2661		0.2789	0.2746
	0.2753	0.2444		0.2794	0.2528		0.2835	0.2613		0.2876	0.2698
	0.2794	0.2528		0.2835	0.2613		0.2876	0.2698		0.2917	0.2783
N8	0.2794	0.2528	N9	0.2835	0.2613	NA	0.2876	0.2698	NB	0.2917	0.2783
	0.2753	0.2444		0.2794	0.2528		0.2835	0.2613		0.2876	0.2698
	0.2840	0.2396		0.2881	0.2480		0.2922	0.2565		0.2963	0.2650
	0.2881	0.2480		0.2922	0.2565		0.2963	0.2650		0.3004	0.2735

Luminous Flux

Unit : lm

1 lm / Bin									2 lm / Bin					
Bin	CIE_x	CIE_y	Bin	CIE_x	CIE_y	Bin	CIE_x	CIE_y	Bin	CIE_x	CIE_y	Bin	CIE_x	CIE_y
18	18	19	18	18	19	18	18	19	T18	18	20	T50	50	52
19	19	20	19	19	20	19	19	20	T20	20	22	T52	52	54
20	20	21	20	20	21	20	20	21	T22	22	24	T54	54	56
21	21	22	21	21	22	21	21	22	T24	24	26	T56	56	58
22	22	23	22	22	23	22	22	23	T26	26	28	T58	58	60
23	23	24	23	23	24	23	23	24	T28	28	30	T60	60	62
24	24	25	24	24	25	24	24	25	T30	30	32	T62	62	64
25	25	26	25	25	26	25	25	26	T32	32	34	T64	64	66
26	26	27	26	26	27	26	26	27	T34	34	36	T66	66	68
27	27	28	27	27	28	27	27	28	T36	36	38	T68	68	70
28	28	29	28	28	29	28	28	29	T38	38	40	T70	70	72
29	29	30	29	29	30	29	29	30	T40	40	42	T72	72	74
30	30	31	30	30	31	30	30	31	T42	42	44	T74	74	76
31	31	32	31	31	32	31	31	32	T44	44	46	T76	76	78
32	32	33	32	32	33	32	32	33	T46	46	48	T78	78	80
33	33	34	33	33	34	33	33	34	T48	48	50	T80	80	82

Note: Tolerance of Luminous Intensity: ±7%.

V_F (Forward Voltage Spec. Setup)

Unit : V

Single Chip			Two Chips					
			Parallel			Serial		
Bin	Min.	Max.	Bin	Min.	Max.	Bin	Min.	Max.
A	2.9	3.0	PA	2.9	3.0	S8	5.8	6.0
B	3.0	3.1	PB	3.0	3.1	S9	6.0	6.2
C	3.1	3.2	PC	3.1	3.2	SA	6.2	6.4
D	3.2	3.3	PD	3.2	3.3	SB	6.4	6.6
E	3.3	3.4	PE	3.3	3.4	SC	6.6	6.8
F	3.4	3.5	PF	3.4	3.5	SD	6.8	7.0
G	3.5	3.6	PG	3.5	3.6	SE	7.0	7.2

Note: Tolerance of Forward Voltage: ±0.05V.

TECHNICAL DATA

LED LAMPs
BRIGHTNESS BIN SELECTION

Brightness Bin Selection

Unit : mcd

Item	Intensity Iv (mcd)	
Bin Code	Min.	Max.
a7	6.0	8.0
a6	8.0	10.0
a5	10.0	12.0
a4	12.0	15.0
a3	15.0	18.0
a2	18.0	22.0
a1	22.0	28.0
0	28.0	35.0
1	35.0	42.0
2	42.0	50.0
3	50.0	60.0
4	60.0	70.0
5	70.0	85.0
6	85.0	100
7	100	120
8	120	140
9	140	170
A	170	200
B	200	240
C	240	285
D	285	360
E	360	450
F	450	565
G	565	715
H	715	900
J	900	1,125
K	1,125	1,425
L	1,425	1,800
M	1,800	2,250
N	2,250	2,850
P	2,850	3,600
Q	3,600	4,500
R	4,500	5,650
S	5,650	7,150
T	7,150	9,000
U	9,000	11,250
V	11,250	14,250
W	14,250	18,000
X	18,000	22,500
Y	22,500	28,500
Z	28,500	36,000

Cool White / CIE Chromaticity Diagram

(I_F=20mA / Ta=25ºC)

Color Ranks		CIE			
A1	X	0.255	0.264	0.280	0.270
	Y	0.245	0.267	0.248	0.230
A0	X	0.264	0.283	0.296	0.280
	Y	0.267	0.305	0.267	0.248
B3	X	0.283	0.304	0.307	0.287
	Y	0.305	0.330	0.315	0.295
B4	X	0.304	0.330	0.330	0.307
	Y	0.330	0.360	0.339	0.315
B5	X	0.287	0.307	0.311	0.296
	Y	0.295	0.315	0.294	0.276
B6	X	0.307	0.330	0.330	0.311
	Y	0.315	0.339	0.318	0.294
C0	X	0.330	0.361	0.355	0.330
	Y	0.360	0.385	0.350	0.318

Note: Measurement uncertainty of the color coordinates ±0.01.

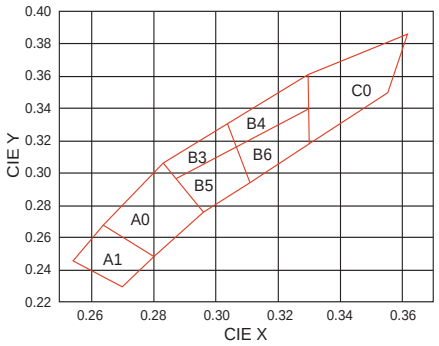

Warm White / CIE Chromaticity Diagram

(I_F=20mA / Ta=25ºC)

Color Ranks		CIE			
D1	X	0.357	0.361	0.398	0.389
	Y	0.361	0.385	0.411	0.382
D2	X	0.354	0.357	0.389	0.382
	Y	0.340	0.361	0.382	0.358
E1	X	0.389	0.398	0.439	0.425
	Y	0.382	0.411	0.431	0.400
E2	X	0.382	0.389	0.425	0.412
	Y	0.358	0.382	0.400	0.372
F1	X	0.425	0.439	0.497	0.477
	Y	0.400	0.431	0.466	0.413
F2	X	0.412	0.425	0.477	0.458
	Y	0.372	0.400	0.413	0.383

Note: Measurement uncertainty of the color coordinates ±0.01.

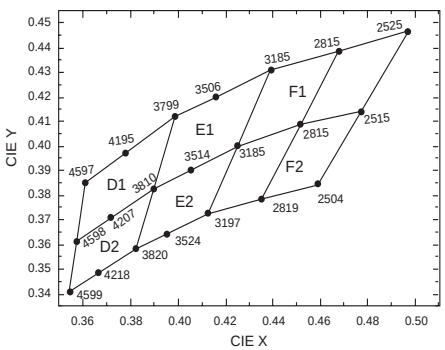

DIGITAL DISPLAY
BRIGHTNESS BIN SELECTION

Bin Code	Brightness Range (µcd)	
	Min.	Max.
C	70	140
D	110	220
E	180	360
F	280	560
G	450	900
H	750	1200
J	1050	1680
K	1400	2300
L	2000	3200
M	2800	4500
N	4000	6400
P	5600	8900
Q	7800	12500
R	11000	17600
S	15000	24000
T	21000	34000
U	30000	48000
V	42000	67000
W	59000	94000
X	83000	133000
Y	116000	186000
Z	158800	254000

AUTOMOTIVE
BIN SELECTION

Exterior White / Cool-White Bin Structure

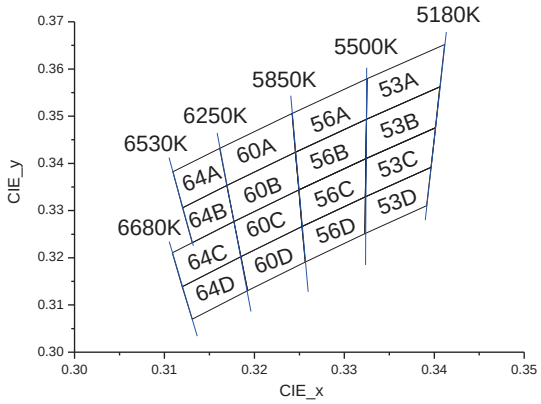

Amber Bin Structure

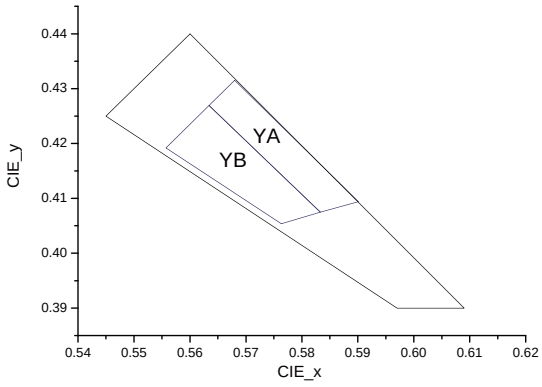

Cool-White Bin Coordinates

Bin	CIE X	CIE Y
64A	0.3109	0.3382
	0.3161	0.3432
	0.3169	0.3353
	0.3120	0.3306
Reference Range: 6240~6530K		
64B	0.3120	0.3306
	0.3169	0.3353
	0.3177	0.3277
	0.3131	0.3232
Reference Range: 6240~6530K		
64C	0.3109	0.3211
	0.3177	0.3277
	0.3185	0.3203
	0.3120	0.3139
Reference Range: 6240~6680K		
64D	0.3120	0.3139
	0.3185	0.3203
	0.3192	0.3131
	0.3131	0.3070
Reference Range: 6240~6680K		
60A	0.3161	0.3432
	0.3242	0.3506
	0.3246	0.3424
	0.3169	0.3353
Reference Range: 5850~6240K		
60B	0.3169	0.3353
	0.3246	0.3424
	0.3249	0.3344
	0.3177	0.3277
Reference Range: 5850~6240K		

Bin	CIE X	CIE Y
60C	0.3177	0.3277
	0.3249	0.3344
	0.3253	0.3266
	0.3185	0.3203
Reference Range: 5850~6240K		
60D	0.3185	0.3203
	0.3253	0.3266
	0.3256	0.3191
	0.3192	0.3131
Reference Range: 5850~6240K		
56A	0.3242	0.3506
	0.3325	0.3579
	0.3325	0.3493
	0.3246	0.3424
Reference Range: 5500~5850K		
56B	0.3246	0.3424
	0.3325	0.3493
	0.3324	0.3410
	0.3249	0.3344
Reference Range: 5500~5850K		
56C	0.3249	0.3344
	0.3324	0.3410
	0.3323	0.3329
	0.3253	0.3266
Reference Range: 5500~5850K		
56D	0.3253	0.3266
	0.3323	0.3329
	0.3323	0.3251
	0.3256	0.3191
Reference Range: 5500~5850K		

Bin	CIE X	CIE Y
53A	0.3325	0.3579
	0.3412	0.3652
	0.3406	0.3562
	0.3325	0.3493
Reference Range: 5180~5500K		
53B	0.3325	0.3493
	0.3406	0.3562
	0.3401	0.3476
	0.3324	0.3410
Reference Range: 5180~5500K		
53C	0.3324	0.3410
	0.3401	0.3476
	0.3396	0.3392
	0.3323	0.3329
Reference Range: 5180~5500K		
53D	0.3323	0.3329
	0.3396	0.3392
	0.3392	0.3310
	0.3323	0.3251
Reference Range: 5180~5500K		

Amber Bin Coordinates

Bin	CIE X	CIE Y
YA	0.5680	0.4315
	0.5634	0.4269
	0.5833	0.4075
	0.5901	0.4094
YB	0.5763	0.4054
	0.5833	0.4075
	0.5634	0.4269
	0.5557	0.4192

AUTOMOTIVE
BIN SELECTION

Interior / White

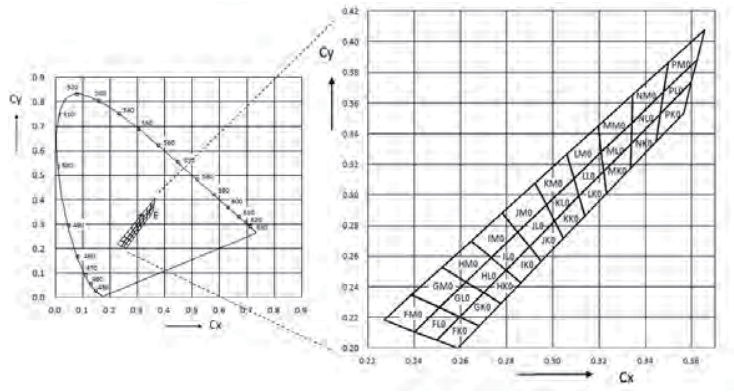

Bin Range of Chromaticity Coordinates Specifications

Bin Code	CIE X	CIE Y	Bin Code	CIE X	CIE Y	Bin Code	CIE X	CIE Y	Bin Code	CIE X	CIE Y
FK0	0.2589	0.2000	NK0	0.3339	0.3336	LL0	0.3113	0.2992	JM0	0.2848	0.2757
	0.2498	0.2053		0.3335	0.3172		0.3090	0.3108		0.2780	0.2883
	0.2597	0.2204		0.3447	0.3347		0.3209	0.3281		0.2922	0.3077
	0.2682	0.2146		0.3465	0.3530		0.3219	0.3154		0.2971	0.2935
GK0	0.2682	0.2146	PK0	0.3465	0.3530	ML0	0.3341	0.3472	KM0	0.2971	0.2935
	0.2597	0.2204		0.3447	0.3347		0.3209	0.3281		0.2922	0.3077
	0.2700	0.2361		0.3567	0.3535		0.3219	0.3154		0.3060	0.3266
	0.2775	0.2292		0.3599	0.3735		0.3339	0.3336		0.3090	0.3108
HK0	0.2775	0.2292	FL0	0.2498	0.2053	NL0	0.3341	0.3472	LM0	0.3090	0.3108
	0.2700	0.2361		0.2402	0.2108		0.3339	0.3336		0.3060	0.3266
	0.2797	0.2509		0.2509	0.2264		0.3465	0.3530		0.3196	0.3451
	0.2861	0.2427		0.2597	0.2204		0.3479	0.3673		0.3209	0.3281
IK0	0.2861	0.2427	GL0	0.2597	0.2204	PL0	0.3479	0.3673	MM0	0.3345	0.3654
	0.2797	0.2509		0.2509	0.2264		0.3465	0.3530		0.3196	0.3451
	0.2898	0.2664		0.2624	0.2431		0.3599	0.3735		0.3209	0.3281
	0.2950	0.2568		0.2700	0.2361		0.3623	0.3882		0.3341	0.3472
JK0	0.2950	0.2568	HL0	0.2700	0.2361	FM0	0.2388	0.2348	NM0	0.3345	0.3654
	0.2898	0.2664		0.2624	0.2431		0.2269	0.2185		0.3341	0.3472
	0.3007	0.2830		0.2733	0.2590		0.2402	0.2108		0.3479	0.3673
	0.3045	0.2717		0.2797	0.2509		0.2509	0.2264		0.3498	0.3863
KK0	0.3045	0.2717	IL0	0.2797	0.2509	GM0	0.2509	0.2264	PM0	0.3498	0.3863
	0.3007	0.2830		0.2733	0.2590		0.2388	0.2348		0.3479	0.3673
	0.3113	0.2992		0.2848	0.2757		0.2520	0.2527		0.3623	0.3882
	0.3138	0.2862		0.2898	0.2664		0.2624	0.2431		0.3655	0.4079
LK0	0.3138	0.2862	JL0	0.2898	0.2664	HM0	0.2624	0.2431			
	0.3113	0.2992		0.2848	0.2757		0.2530	0.2527			
	0.3219	0.3154		0.2971	0.2935		0.2646	0.2700			
	0.3231	0.3008		0.3007	0.2830		0.2733	0.2590			
MK0	0.3339	0.3336	KL0	0.3007	0.2830	IM0	0.2733	0.2590			
	0.3219	0.3154		0.2971	0.2935		0.2646	0.2700			
	0.3231	0.3008		0.3090	0.3108		0.2780	0.2883			
	0.3335	0.3172		0.3113	0.2992		0.2848	0.2757			

Notes: Tolerance of Chromaticity Coordinates: ±0.01

AUTOMOTIVE
BIN SELECTION

Interior / Sky Blue

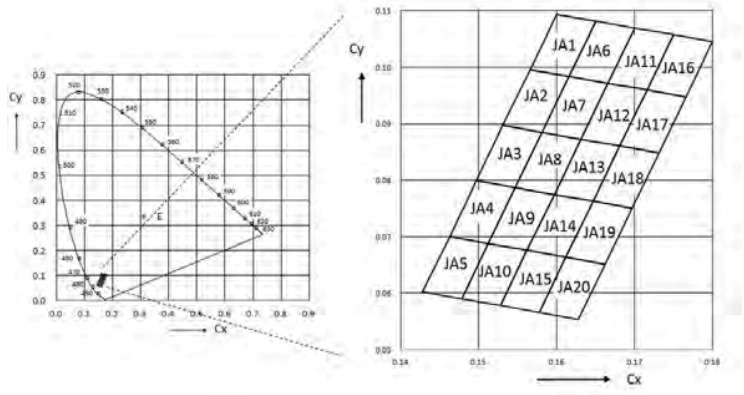

Bin Range of Chromaticity Coordinates Specifications

Bin Code	CIE X	CIE Y	Bin Code	CIE X	CIE Y	Bin Code	CIE X	CIE Y
JA1	0.1600	0.1094	JA9	0.1547	0.0787	JA17	0.1716	0.0960
	0.1650	0.1082		0.1597	0.0775		0.1766	0.0948
	0.1616	0.0984		0.1562	0.0676		0.1731	0.0849
	0.1566	0.0996		0.1512	0.0688		0.1681	0.0861
JA2	0.1566	0.0996	JA10	0.1512	0.0688	JA18	0.1681	0.0861
	0.1616	0.0984		0.1562	0.0676		0.1731	0.0849
	0.1581	0.0885		0.1528	0.0578		0.1697	0.0751
	0.1531	0.0897		0.1478	0.0590		0.1647	0.0763
JA3	0.1531	0.0897	JA11	0.1700	0.1070	JA19	0.1647	0.0763
	0.1581	0.0885		0.1750	0.1058		0.1697	0.0751
	0.1547	0.0787		0.1716	0.0960		0.1662	0.0652
	0.1497	0.0799		0.1666	0.0972		0.1612	0.0664
JA4	0.1497	0.0799	JA12	0.1666	0.0972	JA20	0.1612	0.0664
	0.1547	0.0787		0.1716	0.0960		0.1662	0.0652
	0.1512	0.0688		0.1681	0.0861		0.1628	0.0554
	0.1463	0.0700		0.1631	0.0873		0.1578	0.0566
JA5	0.1463	0.0700	JA13	0.1631	0.0873			
	0.1512	0.0688		0.1681	0.0861			
	0.1478	0.0590		0.1647	0.0763			
	0.1428	0.0602		0.1597	0.0775			
JA6	0.1650	0.1082	JA14	0.1597	0.0775			
	0.1700	0.1070		0.1647	0.0763			
	0.1666	0.0972		0.1612	0.0664			
	0.1616	0.0984		0.1562	0.0676			
JA7	0.1616	0.0984	JA15	0.1562	0.0676			
	0.1666	0.0972		0.1612	0.0664			
	0.1631	0.0873		0.1578	0.0566			
	0.1581	0.0885		0.1528	0.0578			
JA8	0.1581	0.0885	JA16	0.1750	0.1058			
	0.1631	0.0873		0.1800	0.1046			
	0.1597	0.0775		0.1766	0.0948			
	0.1547	0.0787		0.1716	0.0960			

AUTOMOTIVE
BIN SELECTION

Interior / Ice Blue

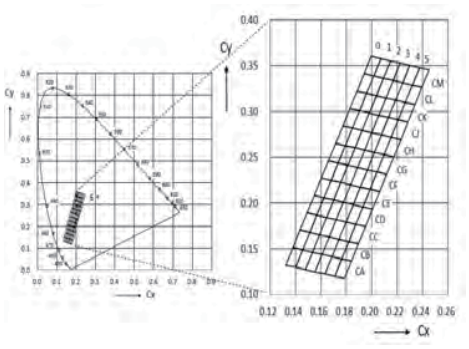

Bin Range of Chromaticity Coordinates Specifications

Bin Code	CIE X	CIE Y	Bin Code	CIE X	CIE Y
CM0	0.1940	0.3415	CL1	0.1960	0.3200
	0.1996	0.3605		0.2016	0.3390
	0.2072	0.3580		0.2092	0.3366
	0.2016	0.3390		0.2036	0.3176
CM1	0.2016	0.3390	CL2	0.2036	0.3176
	0.2072	0.3580		0.2092	0.3366
	0.2148	0.3556		0.2168	0.3341
	0.2092	0.3366		0.2112	0.3151
CM2	0.2092	0.3366	CL3	0.2112	0.3151
	0.2148	0.3556		0.2168	0.3341
	0.2224	0.3531		0.2244	0.3316
	0.2168	0.3341		0.2188	0.3126
CM3	0.2168	0.3341	CL4	0.2188	0.3126
	0.2224	0.3531		0.2244	0.3316
	0.2299	0.3506		0.2319	0.3291
	0.2244	0.3316		0.2264	0.3101
CM4	0.2244	0.3316	CL5	0.2264	0.3101
	0.2299	0.3506		0.2319	0.3291
	0.2375	0.3481		0.2395	0.3267
	0.2319	0.3291		0.2340	0.3077
CM5	0.2319	0.3291	CK0	0.1828	0.3035
	0.2375	0.3481		0.1884	0.3225
	0.2451	0.3457		0.1960	0.3200
	0.2395	0.3267		0.1904	0.3010
CL0	0.1884	0.3225	CK1	0.1904	0.3010
	0.1940	0.3415		0.1960	0.3200
	0.2016	0.3390		0.2036	0.3176
	0.1960	0.3200		0.1980	0.2986

Bin Code	CIE X	CIE Y	Bin Code	CIE X	CIE Y
CK2	0.1980	0.2986	CH1	0.1792	0.2630
	0.2036	0.3176		0.1848	0.2820
	0.2112	0.3151		0.1924	0.2796
	0.2056	0.2961		0.1869	0.2606
CK3	0.2056	0.2961	CH2	0.1869	0.2606
	0.2112	0.3151		0.1924	0.2796
	0.2188	0.3126		0.2000	0.2771
	0.2132	0.2936		0.1945	0.2581
CK4	0.2132	0.2936	CH3	0.1945	0.2581
	0.2188	0.3126		0.2000	0.2771
	0.2264	0.3101		0.2077	0.2746
	0.2208	0.2911		0.2021	0.2556
CK5	0.2208	0.2911	CH4	0.2021	0.2556
	0.2264	0.3101		0.2077	0.2746
	0.2340	0.3077		0.2153	0.2721
	0.2284	0.2887		0.2097	0.2531
CJ0	0.1772	0.2845	CH5	0.2097	0.2531
	0.1828	0.3035		0.2153	0.2721
	0.1904	0.3010		0.2229	0.2697
	0.1848	0.2820		0.2173	0.2507
CJ1	0.1848	0.2820	CG0	0.1660	0.2465
	0.1904	0.3010		0.1716	0.2655
	0.1980	0.2986		0.1792	0.2630
	0.1924	0.2796		0.1736	0.2440
CJ2	0.1924	0.2796	CG1	0.1736	0.2440
	0.1980	0.2986		0.1792	0.2630
	0.2056	0.2961		0.1869	0.2606
	0.2000	0.2771		0.1813	0.2416
CJ3	0.2000	0.2771	CG2	0.1813	0.2416
	0.2056	0.2961		0.1869	0.2606
	0.2132	0.2936		0.1945	0.2581
	0.2077	0.2746		0.1889	0.2391
CJ4	0.2077	0.2746	CG3	0.1889	0.2391
	0.2132	0.2936		0.1945	0.2581
	0.2208	0.2911		0.2021	0.2556
	0.2153	0.2721		0.1965	0.2366
CJ5	0.2153	0.2721	CG4	0.1965	0.2366
	0.2208	0.2911		0.2021	0.2556
	0.2284	0.2887		0.2097	0.2531
	0.2229	0.2697		0.2043	0.2341
CH0	0.1716	0.2655	CG5	0.2043	0.2341
	0.1772	0.2845		0.2097	0.2531
	0.1848	0.2820		0.2173	0.2507
	0.1792	0.2630		0.2118	0.2317

Bin Code	CIE X	CIE Y	Bin Code	CIE X	CIE Y
CF0	0.1604	0.2275	CE5	0.1930	0.1961
	0.1660	0.2465		0.1986	0.2151
	0.1736	0.2440		0.2062	0.2127
	0.1680	0.2250		0.2007	0.1937
CF1	0.1680	0.2250	CD0	0.1492	0.1895
	0.1736	0.2440		0.1548	0.2085
	0.1813	0.2416		0.1624	0.2060
	0.1757	0.2226		0.1568	0.1870
CF2	0.1757	0.2226	CD1	0.1568	0.1870
	0.1813	0.2416		0.1624	0.2060
	0.1889	0.2391		0.1701	0.2036
	0.1833	0.2201		0.1645	0.1846
CF3	0.1833	0.2201	CD2	0.1645	0.1846
	0.1889	0.2391		0.1701	0.2036
	0.1965	0.2366		0.1777	0.2011
	0.1909	0.2176		0.1721	0.1821
CF4	0.1909	0.2176	CD3	0.1721	0.1821
	0.1965	0.2366		0.1777	0.2011
	0.2043	0.2341		0.1854	0.1986
	0.1986	0.2151		0.1798	0.1796
CF5	0.1986	0.2151	CD4	0.1798	0.1796
	0.2043	0.2341		0.1854	0.1986
	0.2118	0.2317		0.1930	0.1961
	0.2062	0.2127		0.1875	0.1771
CE0	0.1548	0.2085	CD5	0.1875	0.1771
	0.1604	0.2275		0.1930	0.1961
	0.1680	0.2250		0.2007	0.1937
	0.1624	0.2060		0.1951	0.1747
CE1	0.1624	0.2060	CC0	0.1436	0.1705
	0.1680	0.2250		0.1492	0.1895
	0.1757	0.2226		0.1568	0.1870
	0.1701	0.2036		0.1513	0.1680
CE2	0.1701	0.2036	CC1	0.1513	0.1680
	0.1757	0.2226		0.1568	0.1870
	0.1833	0.2201		0.1645	0.1846
	0.1777	0.2011		0.1589	0.1656
CE3	0.1777	0.2011	CC2	0.1589	0.1656
	0.1833	0.2201		0.1645	0.1846
	0.1909	0.2176		0.1721	0.1821
	0.1854	0.1986		0.1666	0.1631
CE4	0.1854	0.1986	CC3	0.1666	0.1631
	0.1909	0.2176		0.1721	0.1821
	0.1986	0.2151		0.1798	0.1796
	0.1930	0.1961		0.1742	0.1606

Bin Code	CIE X	CIE Y	Bin Code	CIE X	CIE Y
CC4	0.1742	0.1606	CB5	0.1764	0.1391
	0.1798	0.1796		0.1819	0.1581
	0.1875	0.1771		0.1896	0.1557
	0.1819	0.1581		0.1840	0.1367
CC5	0.1819	0.1581	CA0	0.1324	0.1325
	0.1875	0.1771		0.1380	0.1515
	0.1951	0.1747		0.1457	0.1490
	0.1896	0.1557		0.1401	0.1300
CB0	0.1380	0.1515	CA1	0.1401	0.1300
	0.1436	0.1705		0.1457	0.1490
	0.1513	0.1680		0.1533	0.1466
	0.1457	0.1490		0.1477	0.1276
CB1	0.1457	0.1490	CA2	0.1477	0.1276
	0.1513	0.1680		0.1533	0.1466
	0.1589	0.1656		0.1610	0.1441
	0.1533	0.1466		0.1554	0.1251
CB2	0.1533	0.1466	CA3	0.1554	0.1251
	0.1589	0.1656		0.1610	0.1441
	0.1666	0.1631		0.1687	0.1416
	0.1610	0.1441		0.1631	0.1226
CB3	0.1610	0.1441	CA4	0.1631	0.1226
	0.1666	0.1631		0.1687	0.1416
	0.1742	0.1606		0.1764	0.1391
	0.1687	0.1416		0.1708	0.1201
CB4	0.1687	0.1416	CA5	0.1708	0.1201
	0.1742	0.1606		0.1764	0.1391
	0.1819	0.1581		0.1840	0.1367
	0.1764	0.1391		0.1785	0.1177

AUTOMOTIVE
BIN SELECTION

Interior / 5630/2835

2700K

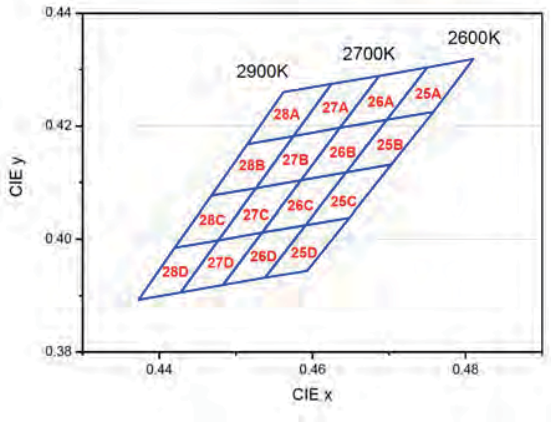

3000K

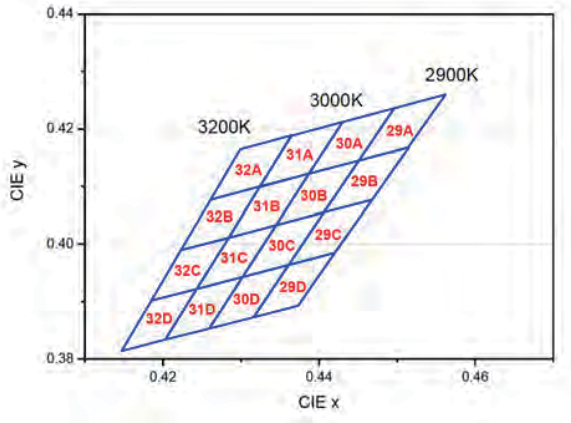

Bin Range of Chromaticity Coordinates Specifications

CCT	Bin Code	CIE X	CIE Y	Bin Code	CIE X	CIE Y
2700K	25A	0.4750	0.4304	25B	0.4697	0.4211
		0.4697	0.4211		0.4644	0.4118
		0.4758	0.4225		0.4703	0.4132
		0.4810	0.4319		0.4758	0.4225
	25C	0.4644	0.4118	25D	0.4591	0.4025
		0.4591	0.4025		0.4538	0.3932
		0.4648	0.4038		0.4593	0.3944
		0.4703	0.4132		0.4648	0.4038
	26A	0.4687	0.4289	26B	0.4636	0.4197
		0.4636	0.4197		0.4585	0.4104
		0.4697	0.4211		0.4644	0.4118
		0.4750	0.4304		0.4697	0.4211
	26C	0.4585	0.4104	26D	0.4534	0.4012
		0.4534	0.4012		0.4483	0.3919
		0.4591	0.4025		0.4538	0.3932
		0.4644	0.4118		0.4591	0.4025
	27A	0.4625	0.4275	27B	0.4575	0.4182
		0.4575	0.4182		0.4526	0.4090
		0.4636	0.4197		0.4585	0.4104
		0.4687	0.4289		0.4636	0.4197
	27C	0.4526	0.4090	27D	0.4477	0.3998
		0.4477	0.3998		0.4428	0.3906
		0.4534	0.4012		0.4483	0.3919
		0.4585	0.4104		0.4534	0.4012
	28A	0.4562	0.4260	28B	0.4515	0.4168
		0.4515	0.4168		0.4468	0.4077
		0.4575	0.4182		0.4526	0.4090
		0.4625	0.4275		0.4575	0.4182
	28C	0.4468	0.4077	28D	0.4420	0.3985
		0.4420	0.3985		0.4373	0.3893
		0.4477	0.3998		0.4428	0.3906
		0.4526	0.4090		0.4477	0.3998

CCT	Bin Code	CIE X	CIE Y	Bin Code	CIE X	CIE Y
3000K	29A	0.4496	0.4236	29B	0.4451	0.4145
		0.4451	0.4145		0.4406	0.4055
		0.4514	0.4168		0.4468	0.4077
		0.4562	0.4260		0.4515	0.4168
	29C	0.4406	0.4055	29D	0.4361	0.3964
		0.4361	0.3964		0.4316	0.3873
		0.4420	0.3985		0.4373	0.3893
		0.4468	0.4077		0.4420	0.3985
	30A	0.4430	0.4212	30B	0.4387	0.4122
		0.4387	0.4122		0.4345	0.4033
		0.4451	0.4145		0.4406	0.4055
		0.4496	0.4236		0.4451	0.4145
	30C	0.4345	0.4033	30D	0.4302	0.3943
		0.4302	0.3943		0.4259	0.3853
		0.4361	0.3964		0.4316	0.3873
		0.4406	0.4055		0.4361	0.3964
	31A	0.4364	0.4188	31B	0.4324	0.4100
		0.4324	0.4099		0.4284	0.4011
		0.4387	0.4122		0.4345	0.4033
		0.4430	0.4212		0.4387	0.4122
	31C	0.4284	0.4011	31D	0.4302	0.3943
		0.4243	0.3922		0.4259	0.3853
		0.4302	0.3943		0.4203	0.3834
		0.4345	0.4033		0.4243	0.3922
	32A	0.4299	0.4165	32B	0.4261	0.4077
		0.4261	0.4077		0.4223	0.3990
		0.4324	0.4100		0.4284	0.4011
		0.4365	0.4189		0.4324	0.4100
	32C	0.4223	0.3990	32D	0.4243	0.3922
		0.4185	0.3902		0.4203	0.3834
		0.4243	0.3922		0.4147	0.3814
		0.4284	0.4011		0.4185	0.3902

3500K

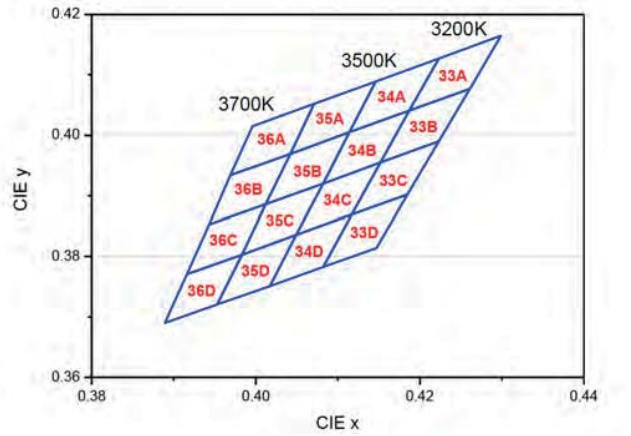

Bin Range of Chromaticity Coordinates Specifications

CCT	Bin Code	CIE X	CIE Y	Bin Code	CIE X	CIE Y
3500K	33A	0.4223	0.4127	33B	0.4187	0.4041
		0.4187	0.4041		0.4152	0.3955
		0.4261	0.4077		0.4223	0.3990
		0.4299	0.4165		0.4261	0.4077
	33C	0.4152	0.3955	33D	0.4117	0.3869
		0.4117	0.3869		0.4082	0.3783
		0.4185	0.3902		0.4147	0.3814
		0.4223	0.3990		0.4185	0.3902
	34A	0.4146	0.4089	34B	0.4114	0.4005
		0.4114	0.4005		0.4082	0.3920
		0.4187	0.4041		0.4152	0.3955
		0.4223	0.4127		0.4187	0.4041
	34C	0.4082	0.3920	34D	0.4049	0.3836
		0.4049	0.3836		0.4017	0.3751
		0.4117	0.3869		0.4082	0.3783
		0.4152	0.3955		0.4117	0.3869
	35A	0.4071	0.4052	35B	0.4042	0.3969
		0.4042	0.3969		0.4012	0.3886
		0.4114	0.4005		0.4082	0.3920
		0.4146	0.4089		0.4114	0.4005
	35C	0.4012	0.3886	35D	0.3983	0.3803
		0.3983	0.3803		0.3953	0.3721
		0.4049	0.3836		0.4017	0.3751
		0.4082	0.3920		0.4049	0.3836
	36A	0.3996	0.4015	36B	0.3969	0.3934
		0.3969	0.3934		0.3943	0.3853
		0.4042	0.3969		0.4012	0.3886
		0.4071	0.4052		0.4042	0.3969
	36C	0.3943	0.3853	36D	0.3916	0.3771
		0.3916	0.3771		0.3889	0.3690
		0.3983	0.3803		0.3953	0.3721
		0.4012	0.3886		0.3983	0.3803

4000K

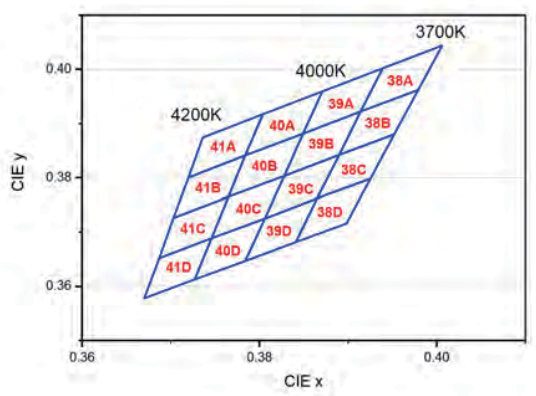

Bin Range of Chromaticity Coordinates Specifications

CCT	Bin Code	CIE X	CIE Y	Bin Code	CIE X	CIE Y
4000K	38A	0.3939	0.4002	38B	0.3914	0.3922
		0.3914	0.3922		0.3890	0.3842
		0.3979	0.3962		0.3952	0.3880
		0.4006	0.4044		0.3979	0.3962
	38C	0.3890	0.3842	38D	0.3865	0.3762
		0.3865	0.3762		0.3841	0.3682
		0.3925	0.3798		0.3898	0.3716
		0.3952	0.3880		0.3925	0.3798
	39A	0.3871	0.3959	39B	0.3849	0.3881
		0.3849	0.3881		0.3828	0.3803
		0.3914	0.3922		0.3890	0.3842
		0.3939	0.4002		0.3914	0.3922
	39C	0.3828	0.3803	39D	0.3806	0.3725
		0.3806	0.3725		0.3784	0.3647
		0.3865	0.3762		0.3841	0.3682
		0.3890	0.3842		0.3865	0.3762
	40A	0.3804	0.3917	40B	0.3784	0.3841
		0.3784	0.3841		0.3765	0.3765
		0.3849	0.3881		0.3828	0.3803
		0.3871	0.3959		0.3849	0.3881
	40C	0.3765	0.3765	40D	0.3746	0.3689
		0.3746	0.3689		0.3727	0.3613
		0.3806	0.3725		0.3784	0.3647
		0.3828	0.3803		0.3806	0.3725
	41A	0.3736	0.3874	41B	0.3720	0.3800
		0.3720	0.3800		0.3703	0.3726
		0.3784	0.3841		0.3765	0.3765
		0.3804	0.3917		0.3784	0.3841
	41C	0.3703	0.3726	41D	0.3687	0.3652
		0.3687	0.3652		0.3670	0.3578
		0.3746	0.3689		0.3727	0.3613
		0.3765	0.3765		0.3746	0.3689

AUTOMOTIVE
BIN SELECTION

Interior / 5630/2835

4500K

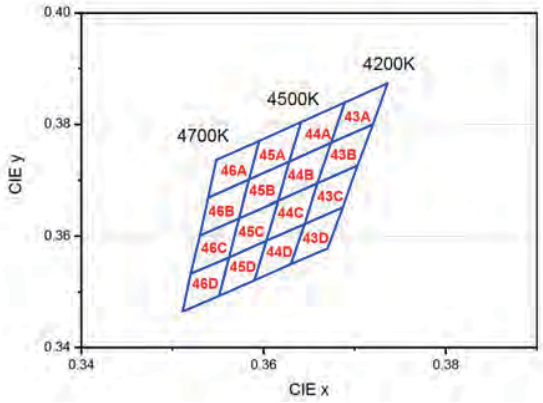

5000K

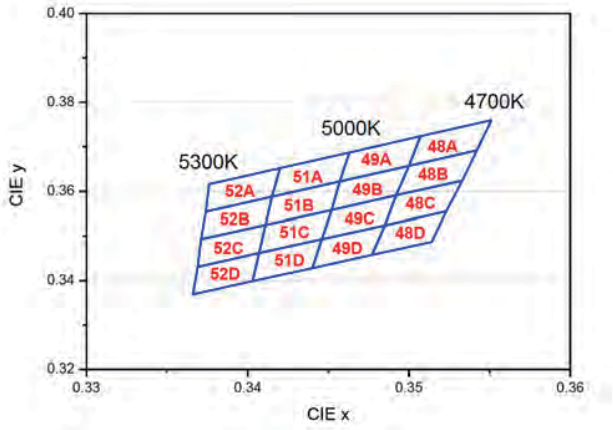

CCT	Bin Code	CIE X	CIE Y	Bin Code	CIE X	CIE Y
4500K	43A	0.3689	0.3839	43B	0.3674	0.3767
		0.3674	0.3767		0.3659	0.3694
		0.3720	0.3800		0.3703	0.3726
		0.3736	0.3874		0.3720	0.3800
	43C	0.3659	0.3694	43D	0.3645	0.3622
		0.3645	0.3622		0.3630	0.3550
		0.3687	0.3652		0.3670	0.3578
		0.3703	0.3726		0.3687	0.3652
	44A	0.3641	0.3804	44B	0.3628	0.3733
		0.3628	0.3733		0.3616	0.3663
		0.3674	0.3767		0.3659	0.3694
		0.3689	0.3839		0.3674	0.3767
	44C	0.3616	0.3663	44D	0.3603	0.3592
		0.3603	0.3592		0.3590	0.3521
		0.3645	0.3622		0.3630	0.3550
		0.3659	0.3694		0.3645	0.3622
	45A	0.3595	0.3770	45B	0.3584	0.3701
		0.3584	0.3701		0.3573	0.3632
		0.3628	0.3733		0.3616	0.3663
		0.3641	0.3804		0.3628	0.3733
	45C	0.3573	0.3632	45D	0.3562	0.3562
		0.3562	0.3562		0.3551	0.3493
		0.3603	0.3592		0.3590	0.3521
		0.3616	0.3663		0.3603	0.3592
	46A	0.3548	0.3736	46B	0.3539	0.3668
		0.3539	0.3668		0.3530	0.3601
		0.3584	0.3701		0.3573	0.3632
		0.3595	0.3770		0.3584	0.3701
	46C	0.3530	0.3601	46D	0.3520	0.3533
		0.3520	0.3533		0.3511	0.3465
		0.3562	0.3562		0.3551	0.3493
		0.3573	0.3632		0.3562	0.3562

CCT	Bin Code	CIE X	CIE Y	Bin Code	CIE X	CIE Y
5000K	48A	0.3507	0.3724	48B	0.3500	0.3657
		0.3500	0.3657		0.3492	0.3591
		0.3542	0.3692		0.3533	0.3624
		0.3551	0.3760		0.3542	0.3692
	48C	0.3492	0.3591	48D	0.3485	0.3524
		0.3485	0.3524		0.3477	0.3458
		0.3523	0.3555		0.3514	0.3487
		0.3533	0.3624		0.3523	0.3555
	49A	0.3463	0.3687	49B	0.3457	0.3622
		0.3457	0.3622		0.3452	0.3558
		0.3500	0.3657		0.3492	0.3591
		0.3507	0.3724		0.3500	0.3657
	49C	0.3452	0.3558	49D	0.3446	0.3493
		0.3446	0.3493		0.3440	0.3428
		0.3485	0.3524		0.3477	0.3458
		0.3492	0.3591		0.3485	0.3524
	51A	0.3420	0.3652	51B	0.3415	0.3588
		0.3415	0.3588		0.3411	0.3525
		0.3457	0.3622		0.3452	0.3558
		0.3463	0.3687		0.3457	0.3622
	51C	0.3411	0.3525	51D	0.3407	0.3462
		0.3407	0.3462		0.3403	0.3399
		0.3446	0.3493		0.3440	0.3428
		0.3452	0.3558		0.3446	0.3493
	52A	0.3376	0.3616	52B	0.3374	0.3554
		0.3374	0.3554		0.3371	0.3493
		0.3415	0.3588		0.3411	0.3525
		0.3420	0.3652		0.3415	0.3588
	52C	0.3371	0.3493	52D	0.3369	0.3431
		0.3369	0.3431		0.3366	0.3369
		0.3407	0.3462		0.3403	0.3399
		0.3411	0.3525		0.3407	0.3462

5700K

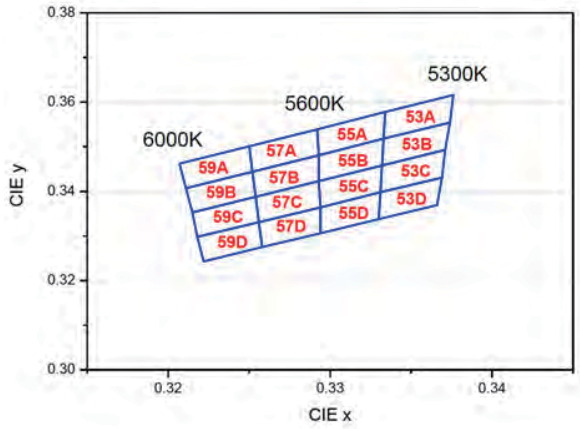

6500K

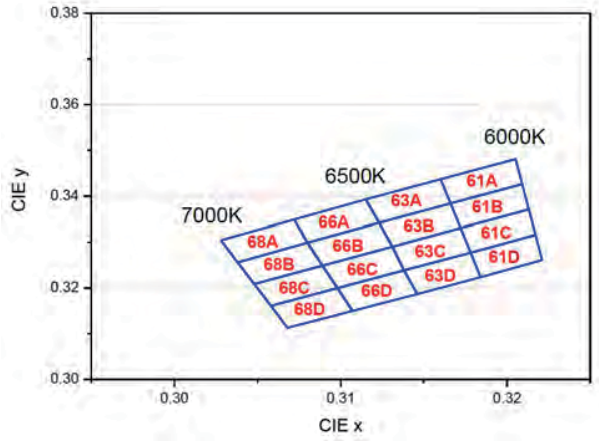

Bin Range of Chromaticity Coordinates Specifications

CCT	Bin Code	CIE X	CIE Y	Bin Code	CIE X	CIE Y
5700K	53A	0.3334	0.3578	53B	0.3333	0.3518
		0.3333	0.3518		0.3332	0.3458
		0.3374	0.3554		0.3371	0.3493
		0.3376	0.3616		0.3374	0.3554
	53C	0.3332	0.3458	53D	0.3331	0.3398
		0.3331	0.3398		0.3330	0.3338
		0.3369	0.3431		0.3366	0.3369
		0.3371	0.3493		0.3369	0.3431
	55A	0.3292	0.3539	55B	0.3293	0.3481
		0.3293	0.3481		0.3293	0.3423
		0.3333	0.3518		0.3332	0.3458
		0.3334	0.3578		0.3333	0.3518
	55C	0.3293	0.3423	55D	0.3294	0.3364
		0.3294	0.3364		0.3294	0.3306
		0.3331	0.3398		0.3330	0.3338
		0.3332	0.3458		0.3331	0.3398
	57A	0.3250	0.3501	57B	0.3252	0.3444
		0.3252	0.3444		0.3254	0.3388
		0.3293	0.3481		0.3293	0.3423
		0.3292	0.3539		0.3293	0.3481
	57C	0.3254	0.3388	57D	0.3256	0.3331
		0.3256	0.3331		0.3258	0.3275
		0.3294	0.3364		0.3294	0.3306
		0.3293	0.3423		0.3294	0.3364
	59A	0.3207	0.3462	59B	0.3211	0.3407
		0.3211	0.3407		0.3215	0.3353
		0.3252	0.3444		0.3254	0.3388
		0.3250	0.3501		0.3252	0.3444
	59C	0.3215	0.3353	59D	0.3218	0.3298
		0.3218	0.3298		0.3222	0.3243
		0.3256	0.3331		0.3258	0.3275
		0.3254	0.3388		0.3256	0.3331

CCT	Bin Code	CIE X	CIE Y	Bin Code	CIE X	CIE Y
6500K	61A	0.3160	0.3437	61B	0.3166	0.3384
		0.3166	0.3384		0.3172	0.3331
		0.3209	0.3426		0.3213	0.3371
		0.3205	0.3481		0.3209	0.3426
	61C	0.3172	0.3331	61D	0.3178	0.3277
		0.3178	0.3277		0.3184	0.3224
		0.3217	0.3316		0.3221	0.3261
		0.3213	0.3371		0.3217	0.3316
	63A	0.3115	0.3393	63B	0.3123	0.3342
		0.3123	0.3342		0.3131	0.3290
		0.3166	0.3384		0.3172	0.3331
		0.3160	0.3437		0.3166	0.3384
	63C	0.3131	0.3290	63D	0.3138	0.3239
		0.3138	0.3239		0.3146	0.3187
		0.3178	0.3277		0.3184	0.3224
		0.3172	0.3331		0.3178	0.3277
	66A	0.3072	0.3349	66B	0.3080	0.3299
		0.3080	0.3299		0.3089	0.3249
		0.3123	0.3342		0.3131	0.3290
		0.3115	0.3393		0.3123	0.3342
	66C	0.3089	0.3249	66D	0.3098	0.3200
		0.3098	0.3200		0.3107	0.3150
		0.3138	0.3239		0.3146	0.3187
		0.3131	0.3290		0.3138	0.3239
	68A	0.3028	0.3304	68B	0.3038	0.3256
		0.3038	0.3256		0.3048	0.3209
		0.3080	0.3299		0.3089	0.3249
		0.3072	0.3349		0.3080	0.3299
	68C	0.3048	0.3209	68D	0.3058	0.3161
		0.3058	0.3161		0.3068	0.3113
		0.3098	0.3200		0.3107	0.3150
		0.3089	0.3249		0.3098	0.3200

AUTOMOTIVE
BIN SELECTION

Interior / Backlight

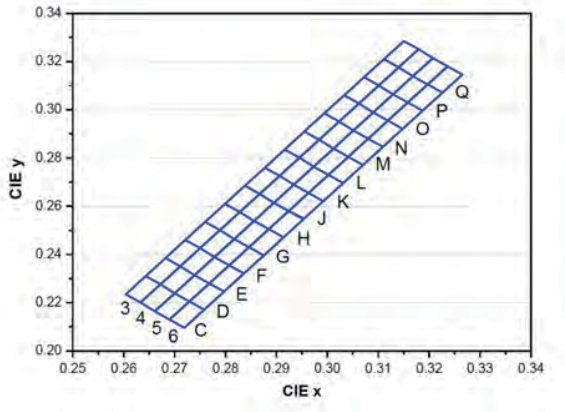

Bin Range of Chromaticity Coordinates Specifications

Bin Code	CIE X	CIE Y	Bin Code	CIE X	CIE Y
Q3	0.3140	0.3176	J3	0.2867	0.2651
	0.3111	0.3210		0.2838	0.2685
	0.3150	0.3285		0.2877	0.2760
	0.3179	0.3251		0.2906	0.2726
P3	0.3101	0.3101	Q4	0.3168	0.3139
	0.3072	0.3135		0.3140	0.3176
	0.3111	0.3210		0.3179	0.3251
	0.3140	0.3176		0.3207	0.3214
O3	0.3062	0.3026	P4	0.3129	0.3064
	0.3033	0.3060		0.3101	0.3101
	0.3072	0.3135		0.3140	0.3176
	0.3101	0.3101		0.3168	0.3139
N3	0.3023	0.2951	O4	0.3090	0.2989
	0.2994	0.2985		0.3062	0.3026
	0.3033	0.3060		0.3101	0.3101
	0.3062	0.3026		0.3129	0.3064
M3	0.2984	0.2876	N4	0.3051	0.2914
	0.2955	0.2910		0.3023	0.2951
	0.2994	0.2985		0.3062	0.3026
	0.3023	0.2951		0.3090	0.2989
L3	0.2945	0.2801	M4	0.3012	0.2839
	0.2916	0.2835		0.2984	0.2876
	0.2955	0.2910		0.3023	0.2951
	0.2984	0.2876		0.3051	0.2914
K3	0.2906	0.2726	L4	0.2973	0.2764
	0.2877	0.2760		0.2945	0.2801
	0.2916	0.2835		0.2984	0.2876
	0.2945	0.2801		0.3012	0.2839

Bin Code	CIE X	CIE Y	Bin Code	CIE X	CIE Y
K4	0.2934	0.2689	P6	0.3187	0.2996
	0.2906	0.2726		0.3158	0.3030
	0.2945	0.2801		0.3197	0.3105
	0.2973	0.2764		0.3226	0.3071
J4	0.2895	0.2614	O6	0.3148	0.2921
	0.2867	0.2651		0.3119	0.2955
	0.2906	0.2726		0.3158	0.3030
	0.2934	0.2689		0.3187	0.2996
Q5	0.3197	0.3105	N6	0.3109	0.2846
	0.3168	0.3139		0.3080	0.2880
	0.3207	0.3214		0.3119	0.2955
	0.3236	0.3180		0.3148	0.2921
P5	0.3158	0.3030	M6	0.3070	0.2771
	0.3129	0.3064		0.3041	0.2805
	0.3168	0.3139		0.3080	0.2880
	0.3197	0.3105		0.3109	0.2846
O5	0.3119	0.2955	L6	0.3031	0.2696
	0.3090	0.2989		0.3002	0.2730
	0.3129	0.3064		0.3041	0.2805
	0.3158	0.3030		0.3070	0.2771
N5	0.3080	0.2880	K6	0.2992	0.2621
	0.3051	0.2914		0.2963	0.2655
	0.3090	0.2989		0.3002	0.2730
	0.3119	0.2955		0.3031	0.2696
M5	0.3041	0.2805	J6	0.2953	0.2546
	0.3012	0.2839		0.2924	0.2580
	0.3051	0.2914		0.2963	0.2655
	0.3080	0.2880		0.2992	0.2621
L5	0.3002	0.2730	H3	0.2828	0.2576
	0.2973	0.2764		0.2799	0.2610
	0.3012	0.2839		0.2838	0.2685
	0.3041	0.2805		0.2867	0.2651
K5	0.2963	0.2655	G3	0.2789	0.2501
	0.2934	0.2689		0.2760	0.2535
	0.2973	0.2764		0.2799	0.2610
	0.3002	0.2730		0.2828	0.2576
J5	0.2924	0.2580	F3	0.2750	0.2426
	0.2895	0.2614		0.2721	0.2460
	0.2934	0.2689		0.2760	0.2535
	0.2963	0.2655		0.2789	0.2501
Q6	0.3226	0.3071	E3	0.2711	0.2351
	0.3197	0.3105		0.2682	0.2385
	0.3236	0.3180		0.2721	0.2460
	0.3265	0.3146		0.2750	0.2426

Bin Code	CIE X	CIE Y	Bin Code	CIE X	CIE Y
D3	0.2672	0.2276	E5	0.2768	0.2280
	0.2643	0.2310		0.2739	0.2314
	0.2682	0.2385		0.2778	0.2389
	0.2711	0.2351		0.2807	0.2355
C3	0.2633	0.2201	D5	0.2729	0.2205
	0.2604	0.2235		0.2700	0.2239
	0.2643	0.2310		0.2739	0.2314
	0.2672	0.2276		0.2768	0.2280
H4	0.2856	0.2539	C5	0.2690	0.2130
	0.2828	0.2576		0.2661	0.2164
	0.2867	0.2651		0.2700	0.2239
	0.2895	0.2614		0.2729	0.2205
G4	0.2817	0.2464	H6	0.2914	0.2471
	0.2789	0.2501		0.2885	0.2505
	0.2828	0.2576		0.2924	0.2580
	0.2856	0.2539		0.2953	0.2546
F4	0.2778	0.2389	G6	0.2875	0.2396
	0.2750	0.2426		0.2846	0.2430
	0.2789	0.2501		0.2885	0.2505
	0.2817	0.2464		0.2914	0.2471
E4	0.2739	0.2314	F6	0.2836	0.2321
	0.2711	0.2351		0.2807	0.2355
	0.2750	0.2426		0.2846	0.2430
	0.2778	0.2389		0.2875	0.2396
D4	0.2700	0.2239	E6	0.2797	0.2246
	0.2672	0.2276		0.2768	0.2280
	0.2711	0.2351		0.2807	0.2355
	0.2739	0.2314		0.2836	0.2321
C4	0.2661	0.2164	D6	0.2758	0.2171
	0.2633	0.2201		0.2729	0.2205
	0.2672	0.2276		0.2768	0.2280
	0.2700	0.2239		0.2797	0.2246
H5	0.2885	0.2505	C6	0.2719	0.2096
	0.2856	0.2539		0.2690	0.2130
	0.2895	0.2614		0.2729	0.2205
	0.2924	0.2580		0.2758	0.2171
G5	0.2846	0.2430			
	0.2817	0.2464			
	0.2856	0.2539			
	0.2885	0.2505			
F5	0.2807	0.2355			
	0.2778	0.2389			
	0.2817	0.2464			
	0.2846	0.2430			

VISIBLE LED

48 HIGH POWER LED

51 DRIVER ON BOARD

53 CHIP ON BOARD

66 LOW MIDDLE POWER LED

77 UV

82 FLASH LED

88 SMD LED

119 LED LAMPS

131 LED DIGITAL DISPLAYS

145 SIGNAGE LED

153 AUTOMOTIVE LED

164 BACKLIGHTING LED

High Power LED ▌Shwo/Monochromatic LED

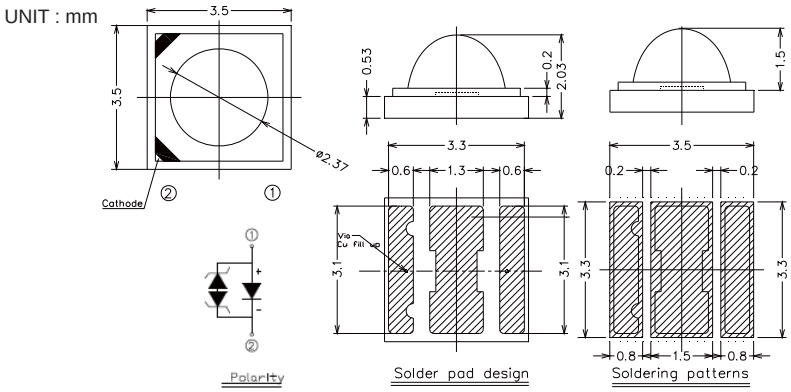

1W / 3V / 350mA

Product	Size (LxWxHmm)	Forward Voltage (V)	Forward Current(mA)	Color	Wavelength (nm)	Luminous Flux/ Radiometric Power (lm/mW)	CRI (min.)
ELSW-Q91F1-0EPNM-HF3F8*	3.5x3.5x2.03	1.6~2.65	350	Far Red	715~745	275 mW	-
ELSW-Q81F1-0EPNM-HF3F8	3.5x3.5x2.03	1.6~2.65	350	Far Red	715~745	225 mW	-
ELSW-R21E1-0EPNM-AD3D8*	3.5x3.5x2.03	1.75~2.95	350	Deep Red	645~675	380 mW	-
ELSW-R11E1-0EPNM-AD3D8	3.5x3.5x2.03	1.75~2.95	350	Deep Red	645~675	330 mW	-
ELSW-F61R1-0PPNM-AR5R6	3.5x3.5x2.03	1.75~2.95	350	Red	620~630	60 lm	-
ELSW-F91O1-0EPNM-AR3R4*	3.5x3.5x2.03	1.75~2.95	350	Orange	610~620	90 lm	-
ELSW-F81O1-0EPNM-AR3R4	3.5x3.5x2.03	1.75~2.95	350	Orange	610~620	80 lm	-
ELSW-F61Y1-0EPNM-AA3A*	3.5x3.5x2.03	1.75~2.95	350	Amber	585~595	60 lm	-
ELSW-F51Y1-0EPNM-AA3A6	3.5x3.5x2.03	1.75~2.95	350	Amber	585~595	52 lm	-
ELSW-J31G1-0LPNM-CG1G2*	3.5x3.5x2.03	2.65~3.85	350	Green	520~530	120 lm	-
ELSW-J21G1-0LPNM-CG1G2	3.5x3.5x2.03	2.65~3.85	350	Green	520~530	110 lm	-
ELSW-E91B1-0EPNM-CB7B8	3.5x3.5x2.03	2.65~3.85	350	Blue	460~470	23 lm	-
ELSW-R51L1-0EPNM-CB4B6*	3.5x3.5x2.03	2.65~3.85	350	Royal Blue	445~460	530 mW	-
ELSW-R41L1-0EPNM-CB4B6	3.5x3.5x2.03	2.65~3.85	350	Royal Blue	445~460	480 mW	-

Star mark * : *Product lead time of at least 8 weeks.

High Power LED ▌Shwo (F)

UNIT : mm

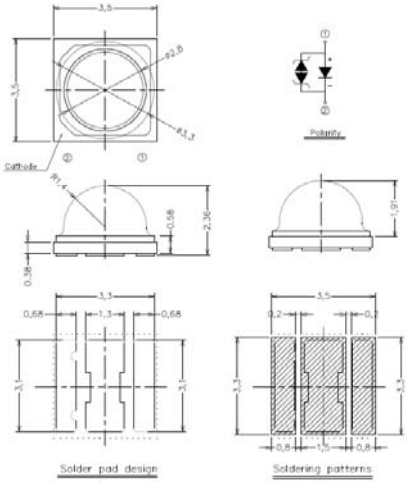

1W / 3V / 350mA

Product	Size (LxWxHmm)	Forward Voltage(V)	Forward Current(mA)	Color	CCT (K)	Luminous Flux (Min.)	Luminous Flux (TYP)	CRI (min.)
ELSWF-JH1C1-5FPGS-C6500	3.5x3.5x2.36	2.65~3.55	350	Cool White	6500	150	165	70
ELSWF-J71C1-5FPGS-C6500	3.5x3.5x2.36	2.65~3.55	350	Cool White	6500	145	160	70
ELSWF-J61C1-5FPHS-C6500	3.5x3.5x2.36	2.65~3.55	350	Cool White	6500	135	149	80
ELSWF-JH1C1-5FPGS-C5700	3.5x3.5x2.36	2.65~3.55	350	Cool White	5700	150	165	70
ELSWF-J71C1-5FPGS-C5700	3.5x3.5x2.36	2.65~3.55	350	Cool White	5700	145	160	70
ELSWF-J61C1-5FPHS-C5700	3.5x3.5x2.36	2.65~3.55	350	Cool White	5700	135	149	80
ELSWF-JH1C1-5FPGS-C5000	3.5x3.5x2.36	2.65~3.55	350	Cool White	5000	150	165	70
ELSWF-J71C1-5FPGS-C5000	3.5x3.5x2.36	2.65~3.55	350	Cool White	5000	145	160	70
ELSWF-J61C1-5FPHS-C5000	3.5x3.5x2.36	2.65~3.55	350	Cool White	5000	135	149	80
ELSWF-J61N1-5FPGS-C4000	3.5x3.5x2.36	2.65~3.55	350	Neutral White	4000	135	149	70
ELSWF-J51N1-5FPHS-C4000	3.5x3.5x2.36	2.65~3.55	350	Neutral White	4000	126	139	80
ELSWF-J41M1-5FPHS-C3500	3.5x3.5x2.36	2.65~3.55	350	Warm White	3500	117	129	80
ELSWF-J41M1-5FPHS-C3000	3.5x3.5x2.36	2.65~3.55	350	Warm White	3000	117	129	80
ELSWF-J41M1-5FPHS-C2700	3.5x3.5x2.36	2.65~3.55	350	Warm White	2700	117	129	80

3W / 3V / 700mA

Product	Size (LxWxHmm)	Forward Voltage(V)	Forward Current(mA)	Color	CCT (K)	Luminous Flux (Min.)	Luminous Flux (TYP)	CRI (min.)
ELSWF-JH1C1-5FPGS-C6500	3.5x3.5x2.36	2.65~3.55	700	Cool White	6500	276	304	70
ELSWF-J71C1-5FPGS-C6500	3.5x3.5x2.36	2.65~3.55	700	Cool White	6500	260	286	70
ELSWF-J61C1-5FPHS-C6500	3.5x3.5x2.36	2.65~3.55	700	Cool White	6500	251	276	80
ELSWF-JH1C1-5FPGS-C5700	3.5x3.5x2.36	2.65~3.55	700	Cool White	5700	276	304	70
ELSWF-J71C1-5FPGS-C5700	3.5x3.5x2.36	2.65~3.55	700	Cool White	5700	260	286	70
ELSWF-J61C1-5FPHS-C5700	3.5x3.5x2.36	2.65~3.55	700	Cool White	5700	251	276	80
ELSWF-JH1C1-5FPGS-C5000	3.5x3.5x2.36	2.65~3.55	700	Cool White	5000	276	304	70
ELSWF-J71C1-5FPGS-C5000	3.5x3.5x2.36	2.65~3.55	700	Cool White	5000	260	286	70
ELSWF-J61C1-5FPHS-C5000	3.5x3.5x2.36	2.65~3.55	700	Cool White	5000	251	276	80
ELSWF-J61N1-5FPGS-C4000	3.5x3.5x2.36	2.65~3.55	700	Neutral White	4000	251	276	70
ELSWF-J51N1-5FPHS-C4000	3.5x3.5x2.36	2.65~3.55	700	Neutral White	4000	234	257	80
ELSWF-J41M1-5FPHS-C3500	3.5x3.5x2.36	2.65~3.55	700	Warm White	3500	218	240	80
ELSWF-J41M1-5FPHS-C3000	3.5x3.5x2.36	2.65~3.55	700	Warm White	3000	218	240	80
ELSWF-J41M1-5FPHS-C2700	3.5x3.5x2.36	2.65~3.55	700	Warm White	2700	218	240	80

High Power LED ▌Shwo (F)

UNIT : mm

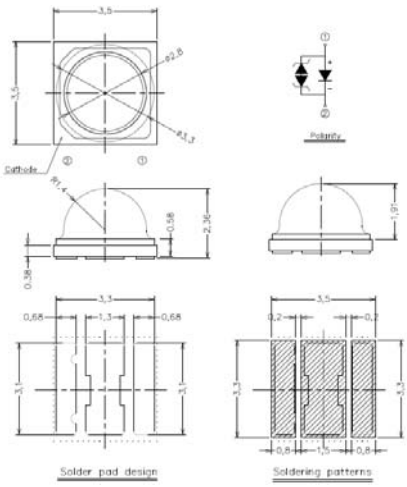

4W / 3V / 1000mA

Product	Size (LxWxHmm)	Forward Voltage(V)	Forward Current(mA)	Color	CCT (K)	Luminous Flux (Min.)	Luminous Flux (TYP)	CRI (min.)
ELSWF-JH1C1-5FPGS-C6500	3.5x3.5x2.36	2.65~3.55	1000	Cool White	6500	374	411	70
ELSWF-J71C1-5FPGS-C6500	3.5x3.5x2.36	2.65~3.55	1000	Cool White	6500	345	380	70
ELSWF-J61C1-5FPHS-C6500	3.5x3.5x2.36	2.65~3.55	1000	Cool White	6500	340	374	80
ELSWF-JH1C1-5FPGS-C5700	3.5x3.5x2.36	2.65~3.55	1000	Cool White	5700	374	411	70
ELSWF-J71C1-5FPGS-C5700	3.5x3.5x2.36	2.65~3.55	1000	Cool White	5700	345	380	70
ELSWF-J61C1-5FPHS-C5700	3.5x3.5x2.36	2.65~3.55	1000	Cool White	5700	340	374	80
ELSWF-JH1C1-5FPGS-C5000	3.5x3.5x2.36	2.65~3.55	1000	Cool White	5000	374	411	70
ELSWF-J71C1-5FPGS-C5000	3.5x3.5x2.36	2.65~3.55	1000	Cool White	5000	345	380	70
ELSWF-J61C1-5FPHS-C5000	3.5x3.5x2.36	2.65~3.55	1000	Cool White	5000	340	374	80
ELSWF-J61N1-5FPGS-C4000	3.5x3.5x2.36	2.65~3.55	1000	Neutral White	4000	340	374	70
ELSWF-J51N1-5FPHS-C4000	3.5x3.5x2.36	2.65~3.55	1000	Neutral White	4000	318	350	80
ELSWF-J41M1-5FPHS-C3500	3.5x3.5x2.36	2.65~3.55	1000	Warm White	3500	295	325	80
ELSWF-J41M1-5FPHS-C3000	3.5x3.5x2.36	2.65~3.55	1000	Warm White	3000	295	325	80
ELSWF-J41M1-5FPHS-C2700	3.5x3.5x2.36	2.65~3.55	1000	Warm White	2700	295	325	80

5W / 3V / 1500mA

Product	Size (LxWxHmm)	Forward Voltage(V)	Forward Current(mA)	Color	CCT (K)	Luminous Flux (Min.)	Luminous Flux (TYP)	CRI (min.)
ELSWF-JH1C1-5FPGS-C6500	3.5x3.5x2.36	2.65~3.55	1500	Cool White	6500	495	545	70
ELSWF-J71C1-5FPGS-C6500	3.5x3.5x2.36	2.65~3.55	1500	Cool White	6500	480	528	70
ELSWF-J61C1-5FPHS-C6500	3.5x3.5x2.36	2.65~3.55	1500	Cool White	6500	446	491	80
ELSWF-JH1C1-5FPGS-C5700	3.5x3.5x2.36	2.65~3.55	1500	Cool White	5700	495	545	70
ELSWF-J71C1-5FPGS-C5700	3.5x3.5x2.36	2.65~3.55	1500	Cool White	5700	480	528	70
ELSWF-J61C1-5FPHS-C5700	3.5x3.5x2.36	2.65~3.55	1500	Cool White	5700	446	491	80
ELSWF-JH1C1-5FPGS-C5000	3.5x3.5x2.36	2.65~3.55	1500	Cool White	5000	495	545	70
ELSWF-J71C1-5FPGS-C5000	3.5x3.5x2.36	2.65~3.55	1500	Cool White	5000	480	528	70
ELSWF-J61C1-5FPHS-C5000	3.5x3.5x2.36	2.65~3.55	1500	Cool White	5000	446	491	80
ELSWF-J61N1-5FPGS-C4000	3.5x3.5x2.36	2.65~3.55	1500	Neutral White	4000	446	491	70
ELSWF-J51N1-5FPHS-C4000	3.5x3.5x2.36	2.65~3.55	1500	Neutral White	4000	416	458	80
ELSWF-J41M1-5FPHS-C3500	3.5x3.5x2.36	2.65~3.55	1500	Warm White	3500	386	425	80
ELSWF-J41M1-5FPHS-C3000	3.5x3.5x2.36	2.65~3.55	1500	Warm White	3000	386	425	80
ELSWF-J41M1-5FPHS-C2700	3.5x3.5x2.36	2.65~3.55	1500	Warm White	2700	386	425	80

Driver on Board ▌TSAN33DI

UNIT : mm

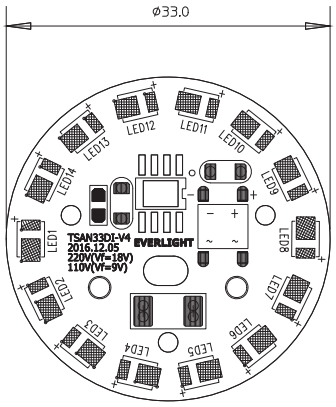

8W

Product	Diameter (mm)	CCT (K)	Flux (lm)	CRI (Ra)	SDCM	Dimming
TSAN33DI-M-K277-EU008-D001T	33x33	2700	720	Typ. 80	7	Non-dimmable
TSAN33DI-M-K307-EU008-D001T		3000				
TSAN33DI-M-K407-EU008-D001T		4000				
TSAN33DI-M-K507-EU008-E001T		5000	800			
TSAN33DI-M-K577-EU008-E001T		5700				
TSAN33DI-M-K657-EU008-E001T		6500				

Driver on Board ▌TSAN0303

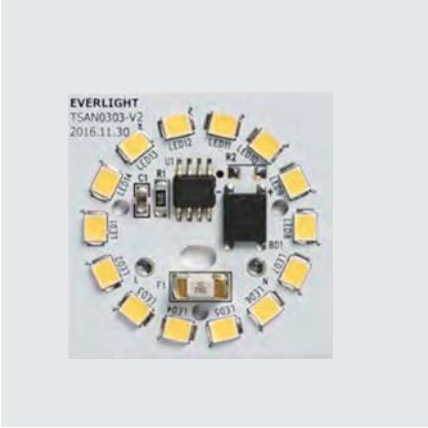

UNIT : mm

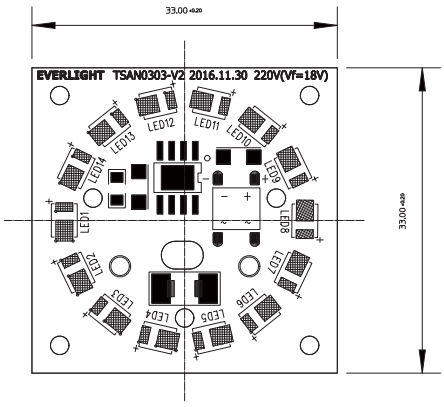

10W

Product	Diameter (mm)	CCT (K)	Flux (lm)	CRI (Ra)	SDCM	Dimming
TSAN0303-M-K277-EU010-D001T	33x33	2700	900	Typ. 80	7	Non-dimmable
TSAN0303-M-K307-EU010-D001T		3000				
TSAN0303-M-K407-EU010-D001T		4000				
TSAN0303-M-K507-EU010-E001T		5000	1,000			
TSAN0303-M-K577-EU010-E001T		5700				
TSAN0303-M-K657-EU010-E001T		6500				

Driver on Board ▌TSAN4FFA

UNIT : mm

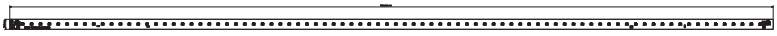

16W

Product	Diameter (mm)	CCT (K)	Flux (lm)	CRI (Ra)	SDCM	Dimming
TSAN4FFA-M-K277-EU016-E001C	1160x15	2700	1,680	Typ. 80	7	Non-dimmable
TSAN4FFA-M-K307-EU016-E001C		3000				
TSAN4FFA-M-K407-EU016-E001C		4000				
TSAN4FFA-M-K507-EU016-F001C		5000	1,840			
TSAN4FFA-M-K577-EU016-F001C		5700				
TSAN4FFA-M-K657-EU016-F001C		6500				

Driver on Board ▌TSAN0505

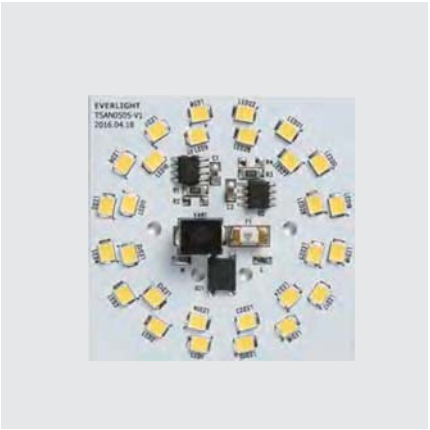

UNIT : mm

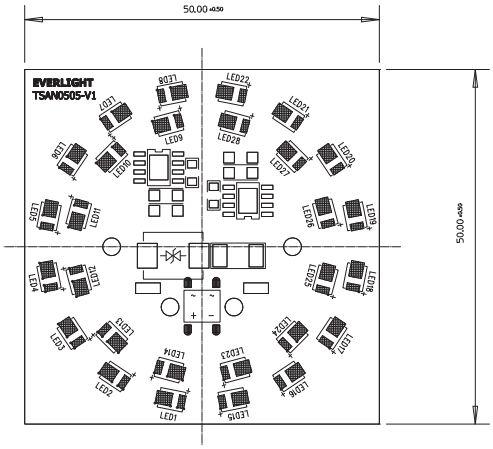

25W

Product	Diameter (mm)	CCT (K)	Flux (lm)	CRI (Ra)	SDCM	Dimming
TSAN0505-M-K277-EU016-D001T	50x50	2700	2,250	Typ. 80	7	Non-dimmable
TSAN0505-M-K307-EU016-D001T		3000				
TSAN0505-M-K407-EU016-D001T		4000				
TSAN0505-M-K507-EU016-E001T		5000	2,500			
TSAN0505-M-K577-EU016-E001T		5700				
TSAN0505-M-K657-EU016-E001T		6500				

Chip on Board ▌Xuan1313

UNIT : mm

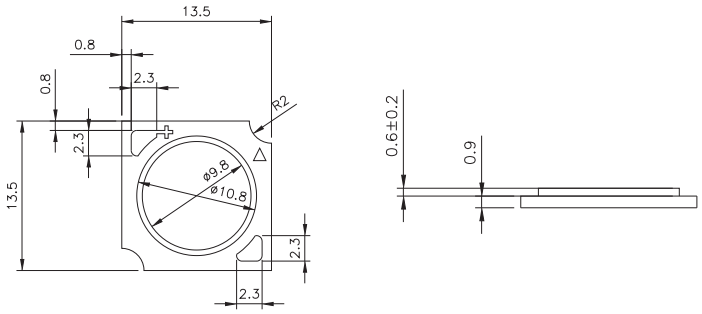

3W / 36V / 90mA

Product	Size (LxWxHmm)	Forward Voltage (V)	Forward Current (mA)	Color	CCT (K)	Luminous Flux (lm)		CRI (min.)	Luminous Efficacy (lm/W)
						Min.	TYP		
GXUAN1313-KM27327-36103-492T	13.5x13.5x1.5	31.0~37.0	90	Warm White	2700	358	398	80	128
GXUAN1313-KM30330-36103-492T	13.5x13.5x1.5	31.0~37.0	90	Warm White	3000	380	422	80	136
GXUAN1313-KM35335-36103-492T	13.5x13.5x1.5	31.0~37.0	90	Warm White	3500	392	435	80	140
GXUAN1313-KM40340-36103-492T	13.5x13.5x1.5	31.0~37.0	90	Neutral White	4000	398	442	80	142
GXUAN1313-KT50550-36103-492T	13.5x13.5x1.5	31.0~37.0	90	Cool White	5000	411	457	80	147
GXUAN1313-KT57557-36103-492T	13.5x13.5x1.5	31.0~37.0	90	Cool White	5700	416	462	80	148
GXUAN1313-KT65565-36103-492T	13.5x13.5x1.5	31.0~37.0	90	Cool White	6500	416	462	80	148
GXUAN1313-PM27327-36103-492T	13.5x13.5x1.5	31.0~37.0	90	Warm White	2700	313	348	90	112
GXUAN1313-PM30330-36103-492T	13.5x13.5x1.5	31.0~37.0	90	Warm White	3000	335	372	90	119
GXUAN1313-PM35335-36103-492T	13.5x13.5x1.5	31.0~37.0	90	Warm White	3500	340	377	90	121
GXUAN1313-PM40340-36103-492T	13.5x13.5x1.5	31.0~37.0	90	Neutral White	4000	348	387	90	124

6W / 36V / 180mA

Product	Size (LxWxHmm)	Forward Voltage (V)	Forward Current (mA)	Color	CCT (K)	Luminous Flux (lm)		CRI (min.)	Luminous Efficacy (lm/W)
						Min.	TYP		
GXUAN1313-KM27327-36206-492T	13.5x13.5x1.5	31.0~37.0	180	Warm White	2700	707	786	80	126.2
GXUAN1313-KM30330-36206-492T	13.5x13.5x1.5	31.0~37.0	180	Warm White	3000	750	833	80	133.8
GXUAN1313-KM35335-36206-492T	13.5x13.5x1.5	31.0~37.0	180	Warm White	3500	773	859	80	137.9
GXUAN1313-KM40340-36206-492T	13.5x13.5x1.5	31.0~37.0	180	Neutral White	4000	785	872	80	140.0
GXUAN1313-KT50550-36206-492T	13.5x13.5x1.5	31.0~37.0	180	Cool White	5000	811	902	80	144.8
GXUAN1313-KT57557-36206-492T	13.5x13.5x1.5	31.0~37.0	180	Cool White	5700	820	912	80	146.4
GXUAN1313-KT65565-36206-492T	13.5x13.5x1.5	31.0~37.0	180	Cool White	6500	820	912	80	146.4
GXUAN1313-PM27327-36206-492T	13.5x13.5x1.5	31.0~37.0	180	Warm White	2700	618	687	90	110.3
GXUAN1313-PM30330-36206-492T	13.5x13.5x1.5	31.0~37.0	180	Warm White	3000	662	735	90	118.0
GXUAN1313-PM35335-36206-492T	13.5x13.5x1.5	31.0~37.0	180	Warm White	3500	670	745	90	119.6
GXUAN1313-PM40340-36206-492T	13.5x13.5x1.5	31.0~37.0	180	Neutral White	4000	688	764	90	122.7

Chip on Board ▌Xuan1313

UNIT : mm

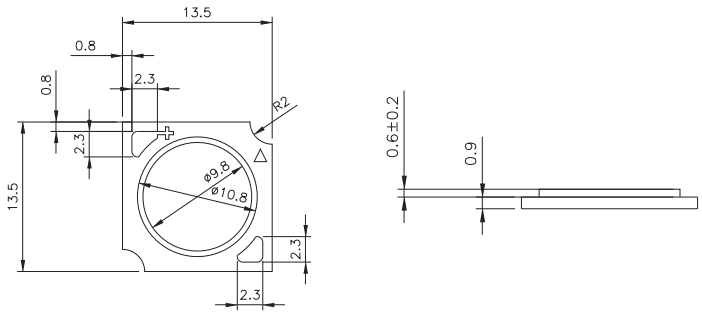

10W / 36V / 270mA

Product	Size (LxWxHmm)	Forward Voltage (V)	Forward Current (mA)	Color	CCT (K)	Luminous Flux (lm)		CRI (min.)	Luminous Efficacy (lm/W)
						Min.	TYP		
GXUAN1313-KM27327-36310-492T	13.5x13.5x1.5	31.0~37.0	270	Warm White	2700	1042	1158	80	124.0
GXUAN1313-KM30330-36310-492T	13.5x13.5x1.5	31.0~37.0	270	Warm White	3000	1104	1227	80	131.3
GXUAN1313-KM35335-36310-492T	13.5x13.5x1.5	31.0~37.0	270	Warm White	3500	1138	1265	80	135.4
GXUAN1313-KM40340-36310-492T	13.5x13.5x1.5	31.0~37.0	270	Neutral White	4000	1156	1285	80	137.6
GXUAN1313-KT50550-36310-492T	13.5x13.5x1.5	31.0~37.0	270	Cool White	5000	1195	1328	80	142.2
GXUAN1313-KT57557-36310-492T	13.5x13.5x1.5	31.0~37.0	270	Cool White	5700	1208	1342	80	143.7
GXUAN1313-KT65565-36310-492T	13.5x13.5x1.5	31.0~37.0	270	Cool White	6500	1208	1342	80	143.7
GXUAN1313-PM27327-36310-492T	13.5x13.5x1.5	31.0~37.0	270	Warm White	2700	911	1012	90	108.3
GXUAN1313-PM30330-36310-492T	13.5x13.5x1.5	31.0~37.0	270	Warm White	3000	975	1083	90	115.9
GXUAN1313-PM35335-36310-492T	13.5x13.5x1.5	31.0~37.0	270	Warm White	3500	987	1097	90	117.4
GXUAN1313-PM40340-36310-492T	13.5x13.5x1.5	31.0~37.0	270	Neutral White	4000	1013	1126	90	120.5

13W / 36V / 360 mA

Product	Size (LxWxHmm)	Forward Voltage (V)	Forward Current (mA)	Color	CCT (K)	Luminous Flux (lm)		CRI (min.)	Luminous Efficacy (lm/W)
						Min.	TYP		
GXUAN1313-KM27327-36413-492T	13.5x13.5x1.5	31.0~37.0	360	Warm White	2700	1364	1515	80	121.6
GXUAN1313-KM30330-36413-492T	13.5x13.5x1.5	31.0~37.0	360	Warm White	3000	1446	1606	80	128.9
GXUAN1313-KM35335-36413-492T	13.5x13.5x1.5	31.0~37.0	360	Warm White	3500	1490	1656	80	132.9
GXUAN1313-KM40340-36413-492T	13.5x13.5x1.5	31.0~37.0	360	Neutral White	4000	1514	1682	80	135.0
GXUAN1313-KT50550-36413-492T	13.5x13.5x1.5	31.0~37.0	360	Cool White	5000	1565	1738	80	139.5
GXUAN1313-KT57557-36413-492T	13.5x13.5x1.5	31.0~37.0	360	Cool White	5700	1582	1758	80	141.1
GXUAN1313-KT65565-36413-492T	13.5x13.5x1.5	31.0~37.0	360	Cool White	6500	1582	1758	80	141.1
GXUAN1313-PM27327-36413-492T	13.5x13.5x1.5	31.0~37.0	360	Warm White	2700	1192	1325	90	106.4
GXUAN1313-PM30330-36413-492T	13.5x13.5x1.5	31.0~37.0	360	Warm White	3000	1276	1418	90	113.8
GXUAN1313-PM35335-36413-492T	13.5x13.5x1.5	31.0~37.0	360	Warm White	3500	1293	1436	90	115.3
GXUAN1313-PM40340-36413-492T	13.5x13.5x1.5	31.0~37.0	360	Neutral White	4000	1326	1474	90	118.3

Chip on Board ▌Xuan1919

UNIT : mm

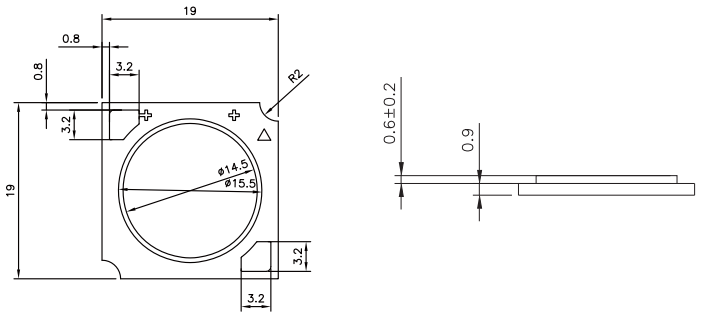

16W / 36V / 450mA

Product	Size (LxWxHmm)	Forward Voltage (V)	Forward Current (mA)	Color	CCT (K)	Luminous Flux (lm)		CRI (min.)	Luminous Efficacy (lm/W)
						Min.	TYP		
GXUAN1919-KM27327-36516-4E2T	19x19x1.6	31.0~37.0	450	Warm White	2700	1779	1977	80	127.0
GXUAN1919-KM30330-36516-4E2T	19x19x1.6	31.0~37.0	450	Warm White	3000	1886	2096	80	134.6
GXUAN1919-KM35335-36516-4E2T	19x19x1.6	31.0~37.0	450	Warm White	3500	1944	2160	80	138.7
GXUAN1919-KM40340-36516-4E2T	19x19x1.6	31.0~37.0	450	Neutral White	4000	1975	2194	80	140.9
GXUAN1919-KT50550-36516-4E2T	19x19x1.6	31.0~37.0	450	Cool White	5000	2041	2268	80	145.7
GXUAN1919-KT57557-36516-4E2T	19x19x1.6	31.0~37.0	450	Cool White	5700	2063	2293	80	147.3
GXUAN1919-KT65565-36516-4E2T	19x19x1.6	31.0~37.0	450	Cool White	6500	2063	2293	80	147.3
GXUAN1919-PM27327-36516-4E2T	19x19x1.6	31.0~37.0	450	Warm White	2700	1555	1728	90	111.0
GXUAN1919-PM30330-36516-4E2T	19x19x1.6	31.0~37.0	450	Warm White	3000	1664	1849	90	118.8
GXUAN1919-PM35335-36516-4E2T	19x19x1.6	31.0~37.0	450	Warm White	3500	1686	1874	90	120.4
GXUAN1919-PM40340-36516-4E2T	19x19x1.6	31.0~37.0	450	Neutral White	4000	1730	1922	90	123.4

19W / 36V / 540mA

Product	Size (LxWxHmm)	Forward Voltage (V)	Forward Current (mA)	Color	CCT (K)	Luminous Flux (lm)		CRI (min.)	Luminous Efficacy (lm/W)
						Min.	TYP		
GXUAN1919-KM27327-36619-4E2T	19x19x1.6	31.0~37.0	540	Warm White	2700	2113	2348	80	125.7
GXUAN1919-KM30330-36619-4E2T	19x19x1.6	31.0~37.0	540	Warm White	3000	2240	2488	80	133.2
GXUAN1919-KM35335-36619-4E2T	19x19x1.6	31.0~37.0	540	Warm White	3500	2309	2565	80	137.3
GXUAN1919-KM40340-36619-4E2T	19x19x1.6	31.0~37.0	540	Neutral White	4000	2345	2606	80	139.5
GXUAN1919-KT50550-36619-4E2T	19x19x1.6	31.0~37.0	540	Cool White	5000	2424	2693	80	144.1
GXUAN1919-KT57557-36619-4E2T	19x19x1.6	31.0~37.0	540	Cool White	5700	2450	2723	80	145.7
GXUAN1919-KT65565-36619-4E2T	19x19x1.6	31.0~37.0	540	Cool White	6500	2450	2723	80	145.7
GXUAN1919-PM27327-36619-4E2T	19x19x1.6	31.0~37.0	540	Warm White	2700	1847	2052	90	109.8
GXUAN1919-PM30330-36619-4E2T	19x19x1.6	31.0~37.0	540	Warm White	3000	1976	2196	90	117.5
GXUAN1919-PM35335-36619-4E2T	19x19x1.6	31.0~37.0	540	Warm White	3500	2003	2225	90	119.1
GXUAN1919-PM40340-36619-4E2T	19x19x1.6	31.0~37.0	540	Neutral White	4000	2055	2283	90	122.2

Chip on Board ▌Xuan1919

UNIT : mm

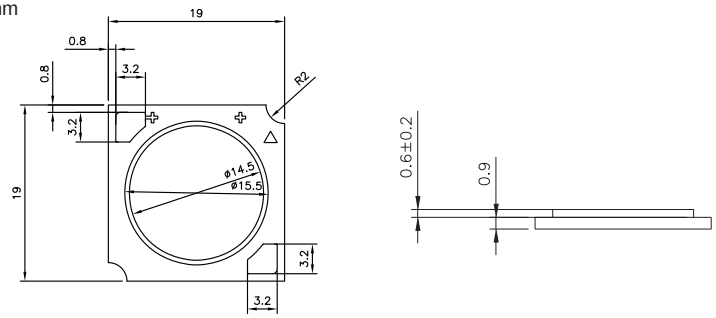

26W / 36V / 720mA

Product	Size (LxWxHmm)	Forward Voltage (V)	Forward Current (mA)	Color	CCT (K)	Luminous Flux (lm)		CRI (min.)	Luminous Efficacy (lm/W)
						Min.	TYP		
GXUAN1919-KM27327-36826-4E2T	19x19x1.6	31.0~37.0	720	Warm White	2700	2763	3070	80	123.2
GXUAN1919-KM30330-36826-4E2T	19x19x1.6	31.0~37.0	720	Warm White	3000	2929	3254	80	130.6
GXUAN1919-KM35335-36826-4E2T	19x19x1.6	31.0~37.0	720	Warm White	3500	3020	3355	80	134.7
GXUAN1919-KM40340-36826-4E2T	19x19x1.6	31.0~37.0	720	Neutral White	4000	3067	3408	80	136.8
GXUAN1919-KT50550-36826-4E2T	19x19x1.6	31.0~37.0	720	Cool White	5000	3170	3522	80	141.4
GXUAN1919-KT57557-36826-4E2T	19x19x1.6	31.0~37.0	720	Cool White	5700	3205	3561	80	142.9
GXUAN1919-KT65565-36826-4E2T	19x19x1.6	31.0~37.0	720	Cool White	6500	3205	3561	80	142.9
GXUAN1919-PM27327-36826-4E2T	19x19x1.6	31.0~37.0	720	Warm White	2700	2416	2684	90	107.7
GXUAN1919-PM30330-36826-4E2T	19x19x1.6	31.0~37.0	720	Warm White	3000	2585	2872	90	115.3
GXUAN1919-PM35335-36826-4E2T	19x19x1.6	31.0~37.0	720	Warm White	3500	2619	2910	90	116.8
GXUAN1919-PM40340-36826-4E2T	19x19x1.6	31.0~37.0	720	Neutral White	4000	2687	2985	90	119.8

Chip on Board ▌Xuan2828

UNIT : mm

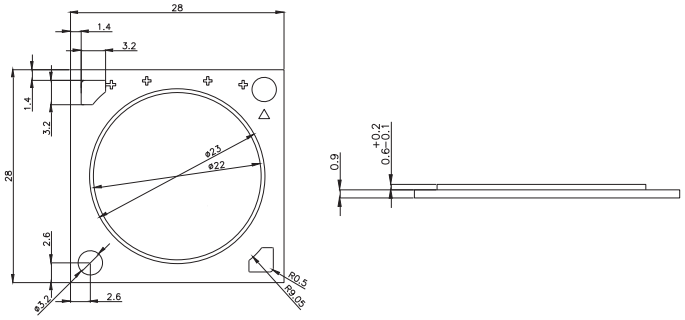

38W / 36V / 1080mA

Product	Size (LxWxHmm)	Forward Voltage (V)	Forward Current (mA)	Color	CCT (K)	Luminous Flux (lm)		CRI (min.)	Luminous Efficacy (lm/W)
						Min.	TYP		
GXUAN2828-KM27327-36C38-4M2T	28x28x1.5	31.0~37.0	1080	Warm White	2700	4286	4762	80	127.4
GXUAN2828-KM30330-36C38-4M2T	28x28x1.5	31.0~37.0	1080	Warm White	3000	4543	5048	80	135.1
GXUAN2828-KM35335-36C38-4M2T	28x28x1.5	31.0~37.0	1080	Warm White	3500	4684	5204	80	139.3
GXUAN2828-KM40340-36C38-4M2T	28x28x1.5	31.0~37.0	1080	Neutral White	4000	4757	5286	80	141.5
GXUAN2828-KT50550-36C38-4M2T	28x28x1.5	31.0~37.0	1080	Cool White	5000	4917	5463	80	146.2
GXUAN2828-KT57557-36C38-4M2T	28x28x1.5	31.0~37.0	1080	Cool White	5700	4970	5523	80	147.8
GXUAN2828-KT65565-36C38-4M2T	28x28x1.5	31.0~37.0	1080	Cool White	6500	4970	5523	80	147.8
GXUAN2828-PM27327-36C38-4M2T	28x28x1.5	31.0~37.0	1080	Warm White	2700	3747	4163	90	111.4
GXUAN2828-PM30330-36C38-4M2T	28x28x1.5	31.0~37.0	1080	Warm White	3000	4009	4455	90	119.2
GXUAN2828-PM35335-36C38-4M2T	28x28x1.5	31.0~37.0	1080	Warm White	3500	4062	4513	90	120.8
GXUAN2828-PM40340-36C38-4M2T	28x28x1.5	31.0~37.0	1080	Neutral White	4000	4168	4631	90	123.9
GXUAN2828-PT50550-36C38-4M2T	28x28x1.5	31.0~37.0	1080	Cool White	5000	4330	4811	90	128.7
GXUAN2828-PT57557-36C38-4M2T	28x28x1.5	31.0~37.0	1080	Cool White	5700	4382	4868	90	130.3
GXUAN2828-PT65565-36C38-4M2T	28x28x1.5	31.0~37.0	1080	Cool White	6500	4382	4868	90	130.3

58W / 54V / 1080mA

Product	Size (LxWxHmm)	Forward Voltage (V)	Forward Current (mA)	Color	CCT (K)	Luminous Flux (lm)		CRI (min.)	Luminous Efficacy (lm/W)
						Min.	TYP		
GXUAN2828-KM27327-54C58-4M2T	28x28x1.5	47.0~55.0	1080	Warm White	2700	6272	6969	80	124.3
GXUAN2828-KM30330-54C58-4M2T	28x28x1.5	47.0~55.0	1080	Warm White	3000	6649	7387	80	131.8
GXUAN2828-KM35335-54C58-4M2T	28x28x1.5	47.0~55.0	1080	Warm White	3500	6854	7616	80	135.9
GXUAN2828-KM40340-54C58-4M2T	28x28x1.5	47.0~55.0	1080	Neutral White	4000	6962	7736	80	138.0
GXUAN2828-KT50550-54C58-4M2T	28x28x1.5	47.0~55.0	1080	Cool White	5000	7196	7995	80	142.6
GXUAN2828-KT57557-54C58-4M2T	28x28x1.5	47.0~55.0	1080	Cool White	5700	7274	8083	80	144.2
GXUAN2828-KT65565-54C58-4M2T	28x28x1.5	47.0~55.0	1080	Cool White	6500	7274	8083	80	144.2
GXUAN2828-PM27327-54C58-4M2T	28x28x1.5	47.0~55.0	1080	Warm White	2700	5484	6093	90	108.7
GXUAN2828-PM30330-54C58-4M2T	28x28x1.5	47.0~55.0	1080	Warm White	3000	5867	6519	90	116.3
GXUAN2828-PM35335-54C58-4M2T	28x28x1.5	47.0~55.0	1080	Warm White	3500	5945	6605	90	117.8
GXUAN2828-PM40340-54C58-4M2T	28x28x1.5	47.0~55.0	1080	Neutral White	4000	6099	6777	90	120.9
GXUAN2828-PT50550-54C58-4M2T	28x28x1.5	47.0~55.0	1080	Cool White	5000	6336	7040	90	125.6
GXUAN2828-PT57557-54C58-4M2T	28x28x1.5	47.0~55.0	1080	Cool White	5700	6412	7125	90	127.1
GXUAN2828-PT65565-54C58-4M2T	28x28x1.5	47.0~55.0	1080	Cool White	6500	6412	7125	90	127.1

Chip on Board ▌Xuan2828

UNIT : mm

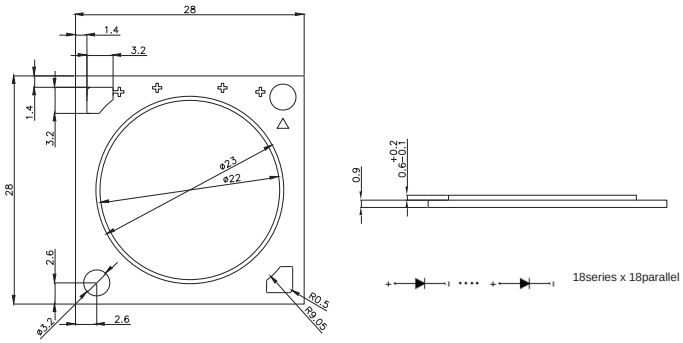

86W / 54V / 1620mA

Product	Size (LxWxHmm)	Forward Voltage (V)	Forward Current (mA)	Color	CCT (K)	Luminous Flux (lm)		CRI (min.)	Luminous Efficacy (lm/W)
						Min.	TYP		
GXUAN2828-KM27327-54I86-4M2T	28x28x1.5	47.0~55.0	1620	Warm White	2700	9155	10172	80	121.0
GXUAN2828-KM30330-54I86-4M2T	28x28x1.5	47.0~55.0	1620	Warm White	3000	9704	10783	80	128.2
GXUAN2828-KM35335-54I86-4M2T	28x28x1.5	47.0~55.0	1620	Warm White	3500	10004	11116	80	132.2
GXUAN2828-KM40340-54I86-4M2T	28x28x1.5	47.0~55.0	1620	Neutral White	4000	10162	11291	80	134.3
GXUAN2828-KT50550-54I86-4M2T	28x28x1.5	47.0~55.0	1620	Cool White	5000	10502	11669	80	138.8
GXUAN2828-KT57557-54I86-4M2T	28x28x1.5	47.0~55.0	1620	Cool White	5700	10617	11797	80	140.3
GXUAN2828-KT65565-54I86-4M2T	28x28x1.5	47.0~55.0	1620	Cool White	6500	10617	11797	80	140.3
GXUAN2828-PM27327-54I86-4M2T	28x28x1.5	47.0~55.0	1620	Warm White	2700	8004	8893	90	105.8
GXUAN2828-PM30330-54I86-4M2T	28x28x1.5	47.0~55.0	1620	Warm White	3000	8564	9516	90	113.2
GXUAN2828-PM35335-54I86-4M2T	28x28x1.5	47.0~55.0	1620	Warm White	3500	8677	9641	90	114.7
GXUAN2828-PM40340-54I86-4M2T	28x28x1.5	47.0~55.0	1620	Neutral White	4000	8902	9891	90	117.6
GXUAN2828-PT50550-54I86-4M2T	28x28x1.5	47.0~55.0	1620	Cool White	5000	9248	10276	90	122.2
GXUAN2828-PT57557-54I86-4M2T	28x28x1.5	47.0~55.0	1620	Cool White	5700	9360	10400	90	123.7
GXUAN2828-PT65565-54I86-4M2T	28x28x1.5	47.0~55.0	1620	Cool White	6500	9360	10400	90	123.7

Chip on Board ▌Xuan3838

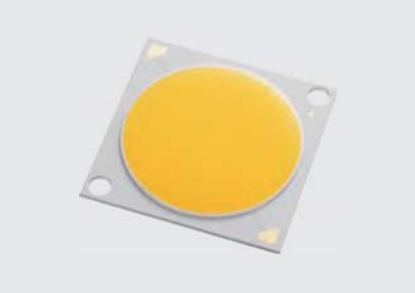

UNIT : mm

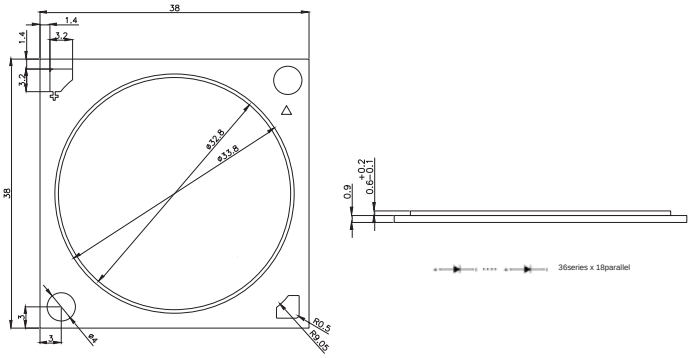

178W / 110V / 1620mA

Product	Size (LxWxHmm)	Forward Voltage (V)	Forward Current (mA)	Color	CCT (K)	Luminous Flux (lm)		CRI (min.)	Luminous Efficacy (lm/W)
						Min.	TYP		
GXUAN3838-KM27327-B0IH3-4W2T	38x38x1.5	103.3~121.3	1620	Warm White	2700	17727	19697	80	116.9
GXUAN3838-KM30330-B0IH3-4W2T	38x38x1.5	103.3~121.3	1620	Warm White	3000	18791	20879	80	123.9
GXUAN3838-KM35335-B0IH3-4W2T	38x38x1.5	103.3~121.3	1620	Warm White	3500	19372	21524	80	127.8
GXUAN3838-KM40340-B0IH3-4W2T	38x38x1.5	103.3~121.3	1620	Neutral White	4000	19676	21862	80	129.8
GXUAN3838-KT50550-B0IH3-4W2T	38x38x1.5	103.3~121.3	1620	Cool White	5000	20336	22596	80	134.1
GXUAN3838-KT57557-B0IH3-4W2T	38x38x1.5	103.3~121.3	1620	Cool White	5700	20559	22843	80	135.6
GXUAN3838-KT65565-B0IH3-4W2T	38x38x1.5	103.3~121.3	1620	Cool White	6500	20559	22843	80	135.6
GXUAN3838-PM27327-B0IH3-4W2T	38x38x1.5	103.3~121.3	1620	Warm White	2700	15527	17253	90	102.4
GXUAN3838-PM30330-B0IH3-4W2T	38x38x1.5	103.3~121.3	1620	Warm White	3000	16614	18460	90	109.6
GXUAN3838-PM35335-B0IH3-4W2T	38x38x1.5	103.3~121.3	1620	Warm White	3500	16833	18703	90	111.0
GXUAN3838-PM40340-B0IH3-4W2T	38x38x1.5	103.3~121.3	1620	Neutral White	4000	17271	19189	90	113.9
GXUAN3838-PT50550-B0IH3-4W2T	38x38x1.5	103.3~121.3	1620	Cool White	5000	17942	19935	90	118.3
GXUAN3838-PT57557-B0IH3-4W2T	38x38x1.5	103.3~121.3	1620	Cool White	5700	18158	20175	90	119.7
GXUAN3838-PT65565-B0IH3-4W2T	38x38x1.5	103.3~121.3	1620	Cool White	6500	18158	20175	90	119.7

Chip on Board ▌JU1215

UNIT : mm

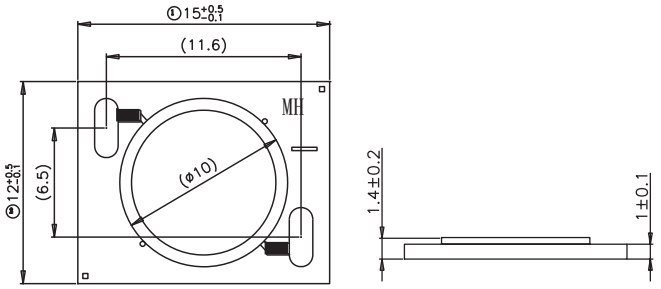

6W / 36V / 160mA

Product	Size (LxWxHmm)	Forward Voltage (V)	Forward Current (mA)	Color	CCT (K)	Luminous Flux (lm)		CRI (min.)	Luminous Efficacy (lm/W)
						Min.	TYP		
GJU1215-KM27327-36106-490T	12x15x1.4	33.0~40.0	160	Warm White	2700	555	605	80	108.0
GJU1215-KM30330-36106-490T	12x15x1.4	33.0~40.0	160	Warm White	3000	595	645	80	115.2
GJU1215-KM40340-36106-490T	12x15x1.4	33.0~40.0	160	Neutral White	4000	615	670	80	119.6
GJU1215-PM27327-36106-490T	12x15x1.4	33.0~40.0	160	Warm White	2700	465	510	90	91.1
GJU1215-PM30330-36106-490T	12x15x1.4	33.0~40.0	160	Warm White	3000	500	545	90	97.3
GJU1215-PM40340-36106-490T	12x15x1.4	33.0~40.0	160	Neutral White	4000	535	580	90	103.6

8W / 36V / 200mA

Product	Size (LxWxHmm)	Forward Voltage (V)	Forward Current (mA)	Color	CCT (K)	Luminous Flux (lm)		CRI (min.)	Luminous Efficacy (lm/W)
						Min.	TYP		
GJU1215-KM27327-36208-490T	12x15x1.4	31.1~37.9	200	Warm White	2700	760	830	80	118.6
GJU1215-KM30330-36208-490T	12x15x1.4	31.1~37.9	200	Warm White	3000	815	885	80	126.4
GJU1215-KM40340-36208-490T	12x15x1.4	31.1~37.9	200	Neutral White	4000	850	925	80	132.1
GJU1215-PM27327-36208-490T	12x15x1.4	31.1~37.9	200	Warm White	2700	645	700	90	100.0
GJU1215-PM30330-36208-490T	12x15x1.4	31.1~37.9	200	Warm White	3000	690	750	90	107.1
GJU1215-PM40340-36208-490T	12x15x1.4	31.1~37.9	200	Neutral White	4000	730	795	90	113.6

12W / 36V / 300mA

Product	Size (LxWxHmm)	Forward Voltage (V)	Forward Current (mA)	Color	CCT (K)	Luminous Flux (lm)		CRI (min.)	Luminous Efficacy (lm/W)
						Min.	TYP		
GJU1215-KM27327-36312-490T	12x15x1.4	31.1~37.9	300	Warm White	2700	1105	1200	80	114.3
GJU1215-KM30330-36312-490T	12x15x1.4	31.1~37.9	300	Warm White	3000	1175	1280	80	121.9
GJU1215-KM40340-36312-490T	12x15x1.4	31.1~37.9	300	Neutral White	4000	1225	1335	80	127.1
GJU1215-PM27327-36312-490T	12x15x1.4	31.1~37.9	300	Warm White	2700	925	1010	90	96.2
GJU1215-PM30330-36312-490T	12x15x1.4	31.1~37.9	300	Warm White	3000	995	1085	90	103.3
GJU1215-PM40340-36312-490T	12x15x1.4	31.1~37.9	300	Neutral White	4000	1060	1150	90	109.5

Chip on Board ▌JU2024

UNIT : mm

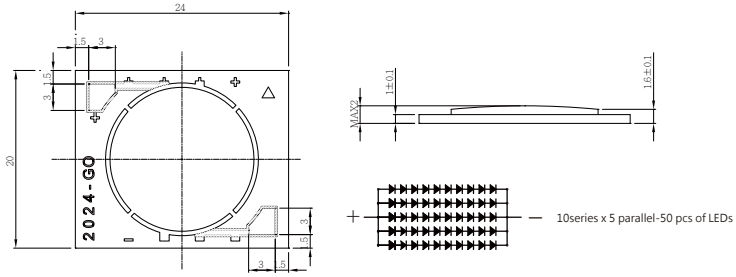

17W / 36V / 500mA

Product	Size (LxWxHmm)	Forward Voltage (V)	Forward Current (mA)	Color	CCT (K)	Luminous Flux (lm)		CRI (min.)	Luminous Efficacy (lm/W)
						Min.	TYP		
GJU2024-KM27327-36517-4G0T	20x24x1.5	31.1~37.9	500	Warm White	2700	1900	2200	80	125.7
GJU2024-KM30330-36517-4G0T	20x24x1.5	31.1~37.9	500	Warm White	3000	2050	2350	80	134.3
GJU2024-KM35335-36517-4G0T	20x24x1.5	31.1~37.9	500	Warm White	3500	2050	2425	80	138.6
GJU2024-KM40340-36517-4G0T	20x24x1.5	31.1~37.9	500	Neutral White	4000	2200	2500	80	142.9
GJU2024-PM27327-36517-4G0T	20x24x1.5	31.1~37.9	500	Warm White	2700	1600	1900	90	108.6
GJU2024-PM30330-36517-4G0T	20x24x1.5	31.1~37.9	500	Warm White	3000	1600	1975	90	112.9
GJU2024-PM35335-36517-4G0T	20x24x1.5	31.1~37.9	500	Warm White	3500	1750	2050	90	117.1
GJU2024-PM40340-36517-4G0T	20x24x1.5	31.1~37.9	500	Neutral White	4000	1900	2200	90	125.7

25W / 36V / 700mA

Product	Size (LxWxHmm)	Forward Voltage (V)	Forward Current (mA)	Color	CCT (K)	Luminous Flux (lm)		CRI (min.)	Luminous Efficacy (lm/W)
						Min.	TYP		
GJU2024-KM27327-36725-4G0T	20x24x1.5	31.1~37.9	700	Warm White	2700	2610	2950	80	120.4
GJU2024-KM30330-36725-4G0T	20x24x1.5	31.1~37.9	700	Warm White	3000	2810	3150	80	128.6
GJU2024-KM35335-36725-4G0T	20x24x1.5	31.1~37.9	700	Warm White	3500	2810	3250	80	132.7
GJU2024-KM40340-36725-4G0T	20x24x1.5	31.1~37.9	700	Neutral White	4000	3010	3350	80	136.7
GJU2024-PM27327-36725-4G0T	20x24x1.5	31.1~37.9	700	Warm White	2700	1990	2350	90	95.9
GJU2024-PM30330-36725-4G0T	20x24x1.5	31.1~37.9	700	Warm White	3000	2200	2550	90	104.1
GJU2024-PM35335-36725-4G0T	20x24x1.5	31.1~37.9	700	Warm White	3500	2400	2750	90	112.2
GJU2024-PM40340-36725-4G0T	20x24x1.5	31.1~37.9	700	Neutral White	4000	2400	2850	90	116.3

Chip on Board ▌JU2024

UNIT : mm

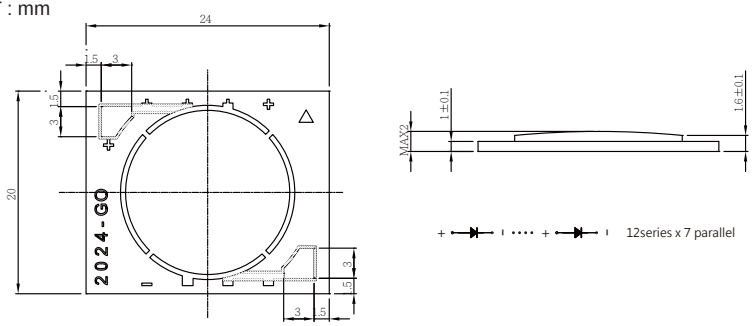

35W / 36V / 950mA

Product	Size (LxWxHmm)	Forward Voltage (V)	Forward Current (mA)	Color	CCT (K)	Luminous Flux (lm)		CRI (min.)	Luminous Efficacy (lm/W)
						Min.	TYP		
GJU2024-KM27327-36A35-4G0T	20x24x1.5	31.1~37.9	950	Warm White	2700	3370	4050	80	121.8
GJU2024-KM30330-36A35-4G0T	20x24x1.5	31.1~37.9	950	Warm White	3000	3680	4200	80	126.3
GJU2024-KM35335-36A35-4G0T	20x24x1.5	31.1~37.9	950	Warm White	3500	3680	4350	80	130.8
GJU2024-KM40340-36A35-4G0T	20x24x1.5	31.1~37.9	950	Neutral White	4000	3980	4500	80	135.3
GJU2024-PM27327-36A35-4G0T	20x24x1.5	31.1~37.9	950	Warm White	2700	2760	3300	90	99.2
GJU2024-PM30330-36A35-4G0T	20x24x1.5	31.1~37.9	950	Warm White	3000	2760	3450	90	103.8
GJU2024-PM35335-36A35-4G0T	20x24x1.5	31.1~37.9	950	Warm White	3500	3060	3600	90	108.3
GJU2024-PM40340-36A35-4G0T	20x24x1.5	31.1~37.9	950	Neutral White	4000	3060	3750	90	112.8

50W / 48V / 950mA

Product	Size (LxWxHmm)	Forward Voltage (V)	Forward Current (mA)	Color	CCT (K)	Luminous Flux (lm)		CRI (min.)	Luminous Efficacy (lm/W)
						Min.	TYP		
GJU2024-KM27327-48A50-4G0T	20x24x1.5	41.5~50.7	950	Warm White	2700	4440	5150	80	116.2
GJU2024-KM30330-48A50-4G0T	20x24x1.5	41.5~50.7	950	Warm White	3000	4850	5550	80	125.2
GJU2024-KM35335-48A50-4G0T	20x24x1.5	41.5~50.7	950	Warm White	3500	4850	5750	80	129.7
GJU2024-KM40340-48A50-4G0T	20x24x1.5	41.5~50.7	950	Neutral White	4000	5260	5950	80	134.2
GJU2024-PM27327-48A50-4G0T	20x24x1.5	41.5~50.7	950	Warm White	2700	3630	4350	90	98.1
GJU2024-PM30330-48A50-4G0T	20x24x1.5	41.5~50.7	950	Warm White	3000	3630	4350	90	98.1
GJU2024-PM35335-48A50-4G0T	20x24x1.5	41.5~50.7	950	Warm White	3500	4030	4750	90	107.2
GJU2024-PM40340-48A50-4G0T	20x24x1.5	41.5~50.7	950	Neutral White	4000	4030	4950	90	111.7

Chip on Board ❙ CHI2024

UNIT : mm

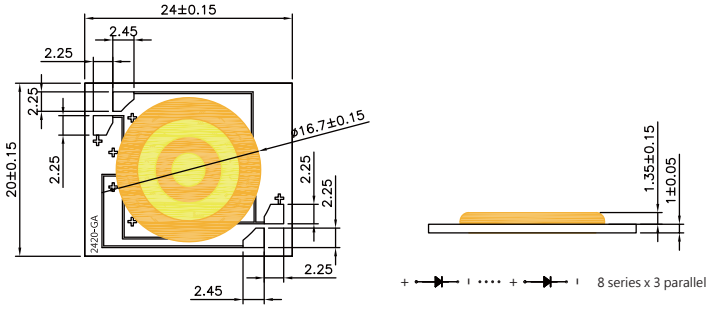

9W / 24V / 350mA

Product	Size (LxWxHmm)	Forward Voltage (V)	Forward Current (mA)	Color	CCT (K)	Luminous Flux (lm)		CRI (min.)	Luminous Efficacy (lm/W)
						Min.	TYP		
CHI2024-KHAH4NG-24609-3G0T	20x24x2.35	23.2~27.0	350/0	Warm White	2700	870	957	80	113.9
	20x24x2.35	23.2~27.0	175/175	Neutral White	4000	968	1065	80	126.8
	20x24x2.35	23.2~27.0	0/350	Cool White	5700	929	1022	80	121.6

Chip on Board ❙ CHI3030

UNIT : mm

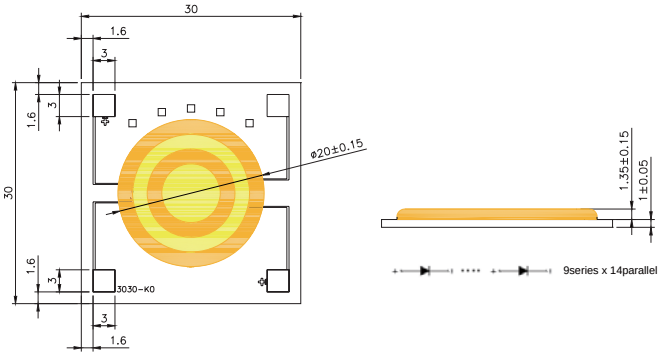

19W / 27V / 700mA

Product	Size (LxWxHmm)	Forward Voltage (V)	Forward Current (mA)	Color	CCT (K)	Luminous Flux (lm)		CRI (min.)	Luminous Efficacy (lm/W)
						Min.	TYP		
CHI3030-PMMB4P9-27E19-3K0T	30x30x2.35	26.0~31.0	700/0	Warm White	2000	1230	1420	90	74.7
	30x30x2.35	26.0~31.0	350/350	Neutral White	2500	1330	1530	90	80.5
	30x30x2.35	26.0~31.0	0/700	Cool White	3000	1430	1640	90	86.3

Chip on Board ▌CHI3030

UNIT : mm

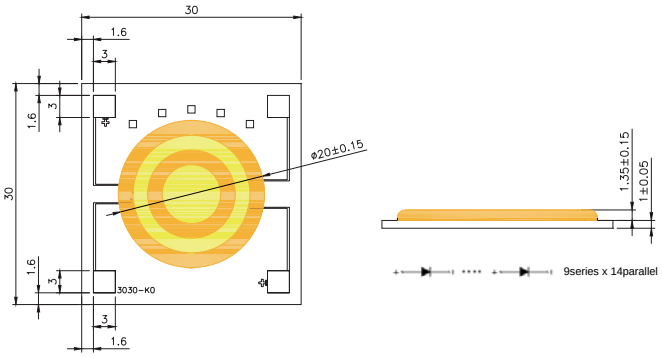

19W / 27V / 700mA

Product	Size (LxWxHmm)	Forward Voltage (V)	Forward Current (mA)	Color	CCT (K)	Luminous Flux (lm)		CRI (min.)	Luminous Efficacy (lm/W)
						Min.	TYP		
CHI3030-KHAH4P7-27E19-3K0T	30x30x2.35	26.0~31.0	700/0	Warm White	2700	1867	2054	80	108.7
	30x30x2.35	26.0~31.0	350/350	Neutral White	4000	2128	2342	80	123.9
	30x30x2.35	26.0~31.0	0/700	Cool White	5700	2069	2276	80	120.4

UNIT : mm

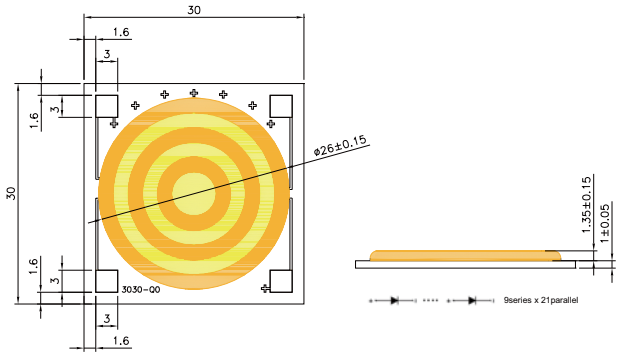

29W / 27V / 1000mA

Product	Size (LxWxHmm)	Forward Voltage (V)	Forward Current (mA)	Color	CCT (K)	Luminous Flux (lm)		CRI (min.)	Luminous Efficacy (lm/W)
						Min.	TYP		
CHI3030-KHAH4S2-27L29-3Q0T	30x30x2.35	26.0~31.0	1000/0	Warm White	2700	2727	3000	80	111.1
	30x30x2.35	26.0~31.0	500/500	Neutral White	4000	3073	3380	80	125.2
	30x30x2.35	26.0~31.0	0/1000	Cool White	5700	2954	3250	80	120.4

Chip on Board ▌Filament/JHU4001

UNIT : mm

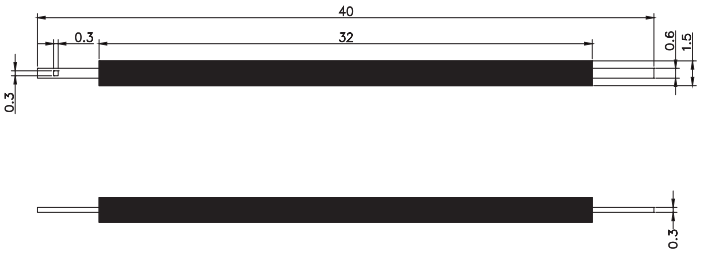

0.7W / 72V / 10mA

Product	Size (LxWxHmm)	Forward Voltage (V)	Forward Current (mA)	Color	CCT (K)	Luminous Flux (lm)		CRI (min.)	Luminous Efficacy (lm/W)
						Min.	TYP		
JHU4001-KM277J1-72101-400T	Total Length (including pins): 40 Diameter: 1.5"	65.0~74.0	10	Warm White	2700	90	105	80	146

Low Middle Power LED ▌XI3030

UNIT : mm

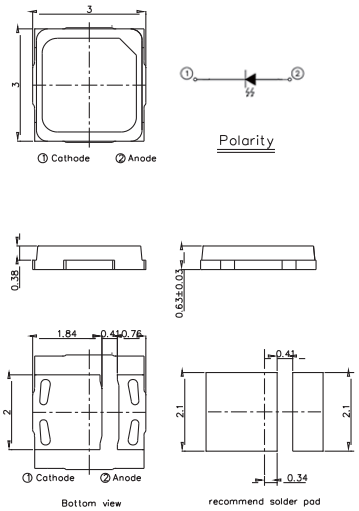

0.2W / 65mA

Product	Size (LxWxHmm)	Forward Voltage (V)	Forward Current (mA)	Color	CCT (K)	Luminous Flux (Min.)	Luminous Flux (Typ.)	CRI (min.)
XI3030P/KK5C-3M2727N41PB24301U6/2N	3.0x3.0x0.63	2.4~3.0	65	Warm White	2700	27	31	80
XI3030P/KK5C-3M3030N41PB24301U6/2N	3.0x3.0x0.63	2.4~3.0	65	Warm White	3000	27	33	80
XI3030P/KK5C-3M3535N41PB24301U6/2N	3.0x3.0x0.63	2.4~3.0	65	Warm White	3500	27	33	80
XI3030P/KK5C-3M4040N42PB24301U6/2N	3.0x3.0x0.63	2.4~3.0	65	Neutral White	4000	30	35	80
XI3030P/KK5C-3M5050N42PB24301U6/2N	3.0x3.0x0.63	2.4~3.0	65	Cool White	5000	30	36	80
XI3030P/KK5C-3M5757N42PB24301U6/2N	3.0x3.0x0.63	2.4~3.0	65	Cool White	5700	30	36	80
XI3030P/KK5C-3M6565N42PB24301U6/2N	3.0x3.0x0.63	2.4~3.0	65	Cool White	6500	30	36	80

Low Middle Power LED ❙ XI3030

UNIT : mm

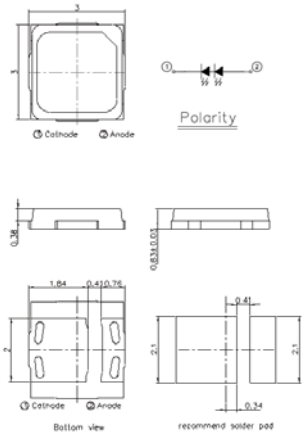

1W / 6V / 150mA

Product	Size (LxWxHmm)	Forward Voltage (V)	Forward Current (mA)	Color	CCT (K)	Luminous Flux (Min.)	Luminous Flux (Typ.)	CRI (min.)
XI3030P/KK5C-H2727S32S756661Z15/2N	3.0x3.0x0.63	5.6~6.6	150	Warm White	2700	125	131	80
XI3030P/KK5C-H3030S41S756661Z15/2N	3.0x3.0x0.63	5.6~6.6	150	Warm White	3000	130	134	80
XI3030P/KK5C-H3535S41S756661Z15/2N	3.0x3.0x0.63	5.6~6.6	150	Warm White	3500	130	136	80
XI3030P/KK5C-H4040S41S756661Z15/2N	3.0x3.0x0.63	5.6~6.6	150	Neutral White	4000	130	138	80
XI3030P/KK5C-H5050S42S856661Z15/2N	3.0x3.0x0.63	5.6~6.6	150	Cool White	5000	135	141	80
XI3030P/KK5C-H5757S42S856661Z15/2N	3.0x3.0x0.63	5.6~6.6	150	Cool White	5700	135	139	80
XI3030P/KK5C-H6565S41S856661Z15/2N	3.0x3.0x0.63	5.6~6.6	150	Cool White	6500	130	138	80

UNIT : mm

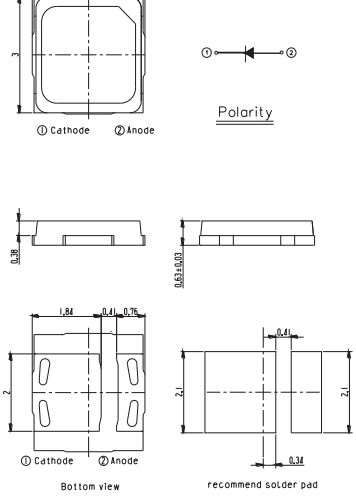

1W / 150mA

Product	Size (LxWxHmm)	Forward Voltage (V)	Forward Current (mA)	Color	Wavelength (nm)	Luminous Flux / Radiometric Power (Min.)	Luminous Flux (Typ.)
XI3030P/B3C-D5060T2T524322Z15/2N	3.0x3.0x0.63	2.4-3.2	150	Royal Blue	450-460	190	-
XI3030P/D3C-P4575R4R715231Z15/2N	3.0x3.0x0.63	1.5-2.3	150	Deep Red	645-675	65	-
XI3030P/F3C-P1545S2S520281Z15/2N	3.0x3.0x0.63	2.0-2.8	150	Far Red	715-745	110	-

Low Middle Power LED ▌67-21S (2835)

UNIT : mm

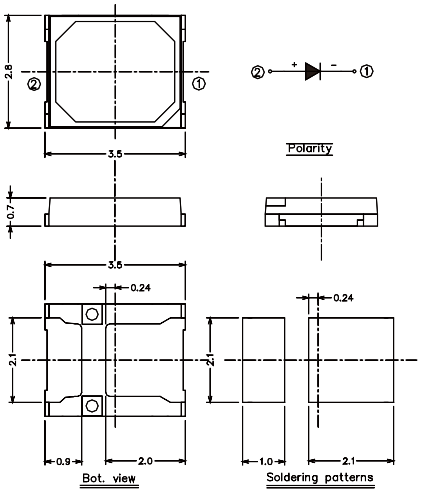

0.2W / 3V / 65mA

Product	Size (LxWxHmm)	Forward Voltage (V)	Forward Current (mA)	Color	CCT (K)	Luminous Flux (Min.)	Luminous Flux (Typ.)	CRI (min.)
67-21S/KK4C-M2727V7X72532U6/2T	2.8x3.5x0.7	2.5 - 3.2	65	Warm White	2700K	27	30	80
67-21S/KK4C-M3030V8X82532U6/2T	2.8x3.5x0.7	2.5 - 3.2	65	Warm White	3000K	28	31	80
67-21S/KK4C-M4040V9X92532U6/2T	2.8x3.5x0.7	2.5 - 3.2	65	Neutral White	4000K	29	32	80
67-21S/KK4C-M5050X0Y02532U6/2T	2.8x3.5x0.7	2.5 - 3.2	65	Cool White	5000K	30	33	80
67-21S/KK4C-M5757X0Y02532U6/2T	2.8x3.5x0.7	2.5 - 3.2	65	Cool White	5700K	30	33	80
67-21S/KK4C-M6565V9X92532U6/2T	2.8x3.5x0.7	2.5 - 3.2	65	Cool White	6500K	29	32	80

0.2W / 3V / 60mA

Product	Size (LxWxHmm)	Forward Voltage (V)	Forward Current (mA)	Color	CCT (K)	Luminous Flux (Min.)	Luminous Flux (Typ.)	CRI (min.)
67-21S/HK3C-H2727L8M42936Z6/2T	2.8x3.5x0.7	2.9 - 3.6	60	Warm White	2700K	17	19	90
67-21S/HK3C-H3030L9N32936Z6/2T	2.8x3.5x0.7	2.9 - 3.6	60	Warm White	3000K	18	20	90
67-21S/HK3C-H3535L9N32936Z6/2T	2.8x3.5x0.7	2.9 - 3.6	60	Warm White	3500K	18	20	90
67-21S/HK3C-H4040M3N42936Z6/2T	2.8x3.5x0.7	2.9 - 3.6	60	Neutral White	4000K	19	21	90
67-21S/HK3C-H5050M31N42936Z6/2T	2.8x3.5x0.7	2.9 - 3.6	60	Cool White	5000K	20	22	90
67-21S/HK3C-H5757M31N42936Z6/2T	2.8x3.5x0.7	2.9 - 3.6	60	Cool White	5700K	20	22	90
67-21S/HK3C-H6565M31N42936Z6/2T	2.8x3.5x0.7	2.9 - 3.6	60	Cool White	6500K	20	22	90

0.2W / 3V / 60mA

Product	Size (LxWxHmm)	Forward Voltage (V)	Forward Current (mA)	Color	CCT (K)	Luminous Flux (Min.)	Luminous Flux (Typ.)	CRI (min.)
67-21S/KK5C-H2727M42N4B2833Z6/2T	2.8x3.5x0.7	2.8 - 3.3	60	Warm White	2700K	23	25	80
67-21S/KK5C-H3030N3N4B2833Z6/2T	2.8x3.5x0.7	2.8 - 3.3	60	Warm White	3000K	24	26	80
67-21S/KK5C-H3535N3N4B2833Z6/2T	2.8x3.5x0.7	2.8 - 3.3	60	Neutral White	3500K	24	26	80
67-21S/KK5C-H4040N31P02833Z6/2T	2.8x3.5x0.7	2.8 - 3.3	60	Neutral White	4000K	25	28	80
67-21S/KK5C-H5050N32P02833Z6/2T	2.8x3.5x0.7	2.8 - 3.3	60	Cool White	5000K	26	29	80
67-21S/KK5C-H5757N32P02833Z6/2T	2.8x3.5x0.7	2.8 - 3.3	60	Cool White	5700K	26	29	80
67-21S/KK5C-H6060N32P02833Z6/2T	2.8x3.5x0.7	2.8 - 3.3	60	Cool White	6000K	26	29	80
67-21S/KK5C-H6565N32P02833Z6/2T	2.8x3.5x0.7	2.8 - 3.3	60	Cool White	6500K	26	29	80

Low Middle Power LED ▌67-21S (2835)

UNIT : mm

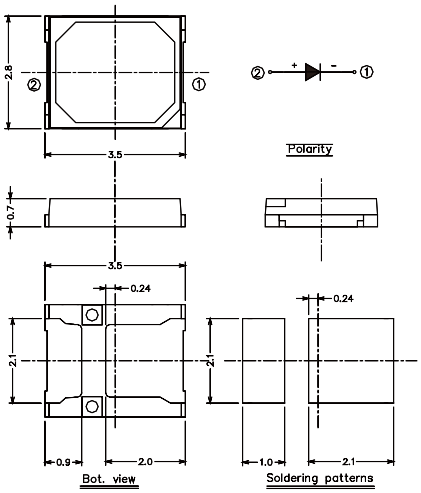

0.5W / 3V / 150mA

Product	Size (LxWxHmm)	Forward Voltage (V)	Forward Current (mA)	Color	CCT (K)	Luminous Flux (Min.)	Luminous Flux (Typ.)	CRI (min.)
67-21S/HK4C-H2727QA1R32834Z15/2T	2.8x3.5x0.7	2.8 - 3.4	150	Warm White	2700K	47	52	90
67-21S/HK4C-H3030R1R42834Z15/2T	2.8x3.5x0.7	2.8 - 3.4	150	Warm White	3000K	50	55	90
67-21S/HK4C-H4040R11R42834Z15/2T	2.8x3.5x0.7	2.8 - 3.4	150	Neutral White	4000K	53	58	90
67-21S/HK4C-H5050R2R52834Z15/2T	2.8x3.5x0.7	2.8 - 3.4	150	Cool White	5000K	55	61	90
67-21S/HK4C-H5757R2R52834Z15/2T	2.8x3.5x0.7	2.8 - 3.4	150	Cool White	5700K	55	61	90
67-21S/HK4C-H6565R2R52834Z15/2T	2.8x3.5x0.7	2.8 - 3.4	150	Cool White	6500K	55	61	90

0.5W / 3V / 150mA

Product	Size (LxWxHmm)	Forward Voltage (V)	Forward Current (mA)	Color	CCT (K)	Luminous Flux (Min.)	Luminous Flux (Typ.)	CRI (min.)
67-21S/KK5C-H2727R2R52834Z15/2T	2.8x3.5x0.7	2.8 - 3.4	150	Warm White	2700K	55	60	80
67-21S/KK5C-H3030R3R62834Z15/2T	2.8x3.5x0.7	2.8 - 3.4	150	Warm White	3000K	60	65	80
67-21S/KK5C-H4040R3R62834Z15/2T	2.8x3.5x0.7	2.8 - 3.4	150	Neutral White	4000K	60	65	80
67-21S/KK5C-H5050R4R72834Z15/2T	2.8x3.5x0.7	2.8 - 3.4	150	Cool White	5000K	65	70	80
67-21S/KK5C-H5757R4R72834Z15/2T	2.8x3.5x0.7	2.8 - 3.4	150	Cool White	5700K	65	70	80
67-21S/KK5C-H6565R4R72834Z15/2T	2.8x3.5x0.7	2.8 - 3.4	150	Cool White	6500K	65	70	80

0.5W / 3V / 150mA

Product	Size (LxWxHmm)	Forward Voltage (V)	Forward Current (mA)	Color	CCT (K)	Luminous Flux (Min.)	Luminous Flux (Typ.)	CRI (min.)
67-21S/KK6C-H2727R3R62834Z15/2T	2.8x3.5x0.7	2.8 - 3.4	150	Warm White	2700K	60	63	80
67-21S/KK6C-H3030R4R72834Z15/2T	2.8x3.5x0.7	2.8 - 3.4	150	Warm White	3000K	65	68	80
67-21S/KK6C-H4040R4R72834Z15/2T	2.8x3.5x0.7	2.8 - 3.4	150	Neutral White	4000K	65	68	80
67-21S/KK6C-H5050R5R82834Z15/2T	2.8x3.5x0.7	2.8 - 3.4	150	Cool White	5000K	70	73	80
67-21S/KK6C-H5757R5R82834Z15/2T	2.8x3.5x0.7	2.8 - 3.4	150	Cool White	5700K	70	73	80
67-21S/KK6C-H6565R5R82834Z15/2T	2.8x3.5x0.7	2.8 - 3.4	150	Cool White	6500K	70	73	80

Low Middle Power LED ▌67-22ST (2835)

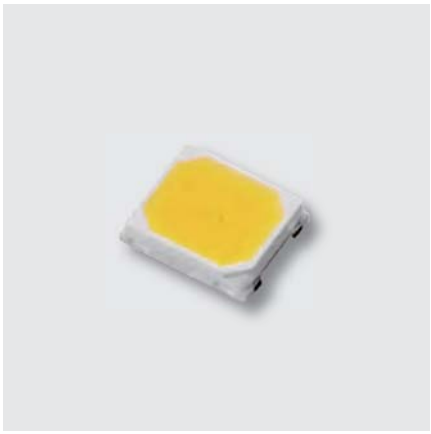

UNIT : mm

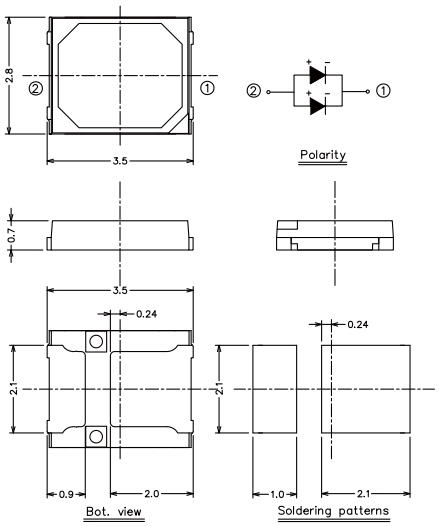

0.2W / 3V / 65mA

Product	Size (LxWxHmm)	Forward Voltage (V)	Forward Current (mA)	Color	CCT (K)	Luminous Flux (Min.)	Luminous Flux (Typ.)	CRI (min.)
67-22ST/KK6C-M2727X0Y02530U6/2T	2.8x3.5x0.7	2.5 - 3.0	65	Warm White	2700	30	33	80
67-22ST/KK6C-M3030X1Y12530U6/2T	2.8x3.5x0.7	2.5 - 3.0	65	Warm White	3000	31	34	80
67-22ST/KK6C-M3535X1Y12530U6/2T	2.8x3.5x0.7	2.5 - 3.0	65	Warm White	3500	31	34	80
67-22ST/KK6C-M4040X2Y22530U6/2T	2.8x3.5x0.7	2.5 - 3.0	65	Neutral White	4000	32	35	80
67-22ST/KK6C-M5050X3Y32530U6/2T	2.8x3.5x0.7	2.5 - 3.0	65	Cool White	5000	33	36	80
67-22ST/KK6C-M5757X3Y32530U6/2T	2.8x3.5x0.7	2.5 - 3.0	65	Cool White	5700	33	36	80
67-22ST/KK6C-M6565X2Y22530U6/2T	2.8x3.5x0.7	2.5 - 3.0	65	Cool White	6500	32	35	80

Low Middle Power LED ▌67-22ST (2835)

UNIT : mm

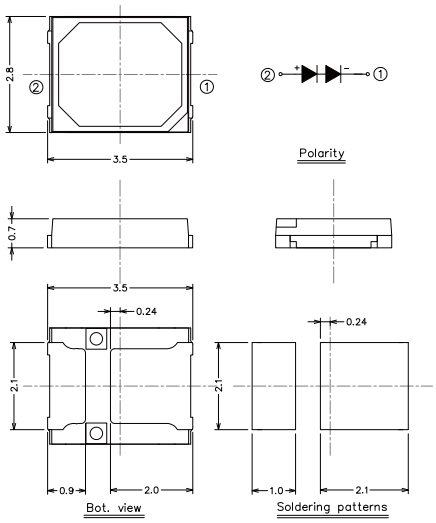

0.5W / 6V / 80mA

Product	Size (LxWxHmm)	Forward Voltage (V)	Forward Current (mA)	Color	CCT (K)	Luminous Flux (Min.)	Luminous Flux (Typ.)	CRI (min.)
67-22ST/KK4C-H2727R2R55670Z8/2T	2.8x3.5x0.7	5.6 - 7.0	80	Warm White	2700K	55	61	80
67-22ST/KK4C-H3030R3R65670Z8/2T	2.8x3.5x0.7	5.6 - 7.0	80	Warm White	3000K	60	66	80
67-22ST/KK4C-H4040R3R65670Z8/2T	2.8x3.5x0.7	5.6 - 7.0	80	Neutral White	4000K	60	66	80
67-22ST/KK4C-H5050R4R75670Z8/2T	2.8x3.5x0.7	5.6 - 7.0	80	Cool White	5000K	65	72	80
67-22ST/KK4C-H5757R4R75670Z8/2T	2.8x3.5x0.7	5.6 - 7.0	80	Cool White	5700K	65	72	80
67-22ST/KK4C-H6565R4R75670Z8/2T	2.8x3.5x0.7	5.6 - 7.0	80	Cool White	6500K	65	72	80

0.5W / 18V / 30mA

Product	Size (LxWxHmm)	Forward Voltage (V)	Forward Current (mA)	Color	CCT (K)	Luminous Flux (Min.)	Luminous Flux (Typ.)	CRI (min.)
67-22ST/KK4C-H2727R4R7A7A9Z3/2T	2.8x3.5x0.7	17 - 19	30	Warm White	2700K	65	72	80
67-22ST/KK4C-H3030R5R8A7A9Z3/2T	2.8x3.5x0.7	17 - 19	30	Warm White	3000K	70	77	80
67-22ST/KK4C-H3535R5R8A7A9Z3/2T	2.8x3.5x0.7	17 - 19	30	Warm White	3500K	70	77	80
67-22ST/KK4C-H4040R5R8A7A9Z3/2T	2.8x3.5x0.7	17 - 19	30	Neutral White	4000K	70	77	80
67-22ST/KK4C-H5050R5BR8A7A9Z3/2T	2.8x3.5x0.7	17 - 19	30	Cool White	5000K	73	80	80
67-22ST/KK4C-H5757R5BR8A7A9Z3/2T	2.8x3.5x0.7	17 - 19	30	Cool White	5700K	73	80	80
67-22ST/KK4C-H6565R5R8A7A9Z3/2T	2.8x3.5x0.7	17 - 19	30	Cool White	6500K	70	77	80

Low Middle Power LED ▌67-22ST (2835)

UNIT : mm

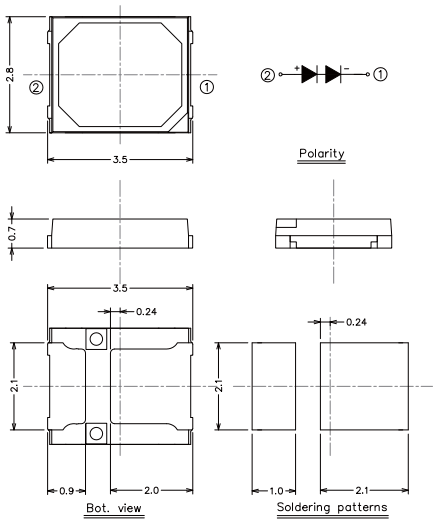

1W / 6V / 150mA

Product	Size (LxWxHmm)	Forward Voltage (V)	Forward Current (mA)	Color	CCT (K)	Luminous Flux (Min.)	Luminous Flux (Typ.)	CRI (min.)
67-22ST/HK4C-H2727R8S25868Z15/2T	2.8x3.5x0.7	5.8 - 6.8	150	Warm White	2700	90	99	90
67-22ST/HK4C-H3030R8BS35868Z15/2T	2.8x3.5x0.7	5.8 - 6.8	150	Warm White	3000	95	105	90
67-22ST/HK4C-H4040S1S45868Z15/2T	2.8x3.5x0.7	5.8 - 6.8	150	Neutral White	4000	100	110	90
67-22ST/HK4C-H5050S1S45868Z15/2T	2.8x3.5x0.7	5.8 - 6.8	150	Cool White	5000	100	110	90
67-22ST/HK4C-H5757S1S45868Z15/2T	2.8x3.5x0.7	5.8 - 6.8	150	Cool White	5700	100	110	90
67-22ST/HK4C-H6565S1S45868Z15/2T	2.8x3.5x0.7	5.8 - 6.8	150	Cool White	6500	100	110	90

1W / 6V / 150mA

Product	Size (LxWxHmm)	Forward Voltage (V)	Forward Current (mA)	Color	CCT (K)	Luminous Flux (Min.)	Luminous Flux (Typ.)	CRI (min.)
67-22ST/KK5C-H2727S3S75668Z15/2T	2.8x3.5x0.7	5.6 - 6.8	150	Warm White	2700	120	132	80
67-22ST/KK5C-H3030S3BS75668Z15/2T	2.8x3.5x0.7	5.6 - 6.8	150	Warm White	3000	125	138	80
67-22ST/KK5C-H3535S3BS75668Z15/2T	2.8x3.5x0.7	5.6 - 6.8	150	Warm White	3500	125	138	80
67-22ST/KK5C-H4040S3BS75668Z15/2T	2.8x3.5x0.7	5.6 - 6.8	150	Neutral White	4000	125	138	80
67-22ST/KK5C-H5050S4S85668Z15/2T	2.8x3.5x0.7	5.6 - 6.8	150	Cool White	5000	130	143	80
67-22ST/KK5C-H6565S4S85668Z15/2T	2.8x3.5x0.7	5.6 - 6.8	150	Cool White	6500	130	143	80

Low Middle Power LED ▌67-23ST (2835)

UNIT : mm

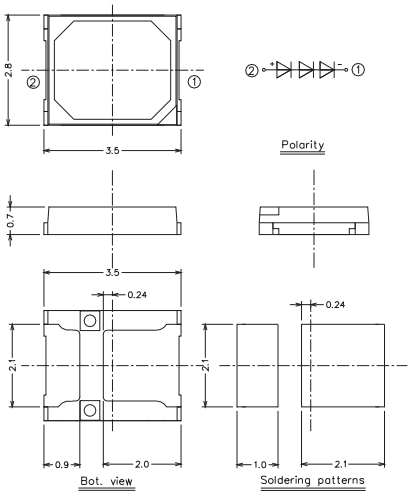

0.5W / 9V / 60mA

Product	Size (LxWxHmm)	Forward Voltage (V)	Forward Current (mA)	Color	CCT (K)	Luminous Flux (Min.)	Luminous Flux (Typ.)	CRI (min.)
67-23ST/KK4C-H2727R5R88496Z6/2T	2.8x3.5x0.7	8.4 - 9.6	60	Warm White	2700K	70	77	80
67-23ST/KK4C-H3030R5BR88496Z6/2T	2.8x3.5x0.7	8.4 - 9.6	60	Warm White	3000K	73	80	80
67-23ST/KK4C-H4040R6S18496Z6/2T	2.8x3.5x0.7	8.4 - 9.6	60	Neutral White	4000K	76	84	80
67-23ST/KK4C-H5050R6S18496Z6/2T	2.8x3.5x0.7	8.4 - 9.6	60	Cool White	5000K	76	84	80
67-23ST/KK4C-H5757R6S18496Z6/2T	2.8x3.5x0.7	8.4 - 9.6	60	Cool White	5700K	76	84	80
67-23ST/KK4C-H6060R6S18496Z6/2T	2.8x3.5x0.7	8.4 - 9.6	60	Cool White	6000K	76	84	80
67-23ST/KK4C-H6565R6S18496Z6/2T	2.8x3.5x0.7	8.4 - 9.6	60	Cool White	6500K	76	84	80

1W / 9V / 100mA

Product	Size (LxWxHmm)	Forward Voltage (V)	Forward Current (mA)	Color	CCT (K)	Luminous Flux (Min.)	Luminous Flux (Typ.)	CRI (min.)
67-23ST/KK3C-H2727S2S59099Z10/2T	2.8x3.5x0.7	9.0 - 9.9	100	Warm White	2700K	110	121	80
67-23ST/KK3C-H3030S2BS59099Z10/2T	2.8x3.5x0.7	9.0 - 9.9	100	Warm White	3000K	115	127	80
67-23ST/KK3C-H3535S2BS59099Z10/2T	2.8x3.5x0.7	9.0 - 9.9	100	Warm White	3500K	115	127	80
67-23ST/KK3C-H4040S2BS59099Z10/2T	2.8x3.5x0.7	9.0 - 9.9	100	Neutral White	4000K	115	127	80
67-23ST/KK3C-H5050S3S69099Z10/2T	2.8x3.5x0.7	9.0 - 9.9	100	Cool White	5000K	120	132	80
67-23ST/KK3C-H5757S3S69099Z10/2T	2.8x3.5x0.7	9.0 - 9.9	100	Cool White	5700K	120	132	80
67-23ST/KK3C-H6565S3S69099Z10/2T	2.8x3.5x0.7	9.0 - 9.9	100	Cool White	6500K	120	132	80

1W / 9V / 100mA

Product	Size (LxWxHmm)	Forward Voltage (V)	Forward Current (mA)	Color	CCT (K)	Luminous Flux (Min.)	Luminous Flux (Typ.)	CRI (min.)
67-23ST/KK4C-H2727S2BS59099Z10/2T	2.8x3.5x0.7	9.0 - 9.9	100	Warm White	2700K	115	127	80
67-23ST/KK4C-H3030S3S69099Z10/2T	2.8x3.5x0.7	9.0 - 9.9	100	Warm White	3000K	120	132	80
67-23ST/KK4C-H3535S3S69099Z10/2T	2.8x3.5x0.7	9.0 - 9.9	100	Warm White	3500K	120	132	80
67-23ST/KK4C-H4040S3S69099Z10/2T	2.8x3.5x0.7	9.0 - 9.9	100	Neutral White	4000K	120	132	80
67-23ST/KK4C-H5050S3BS69099Z10/2T	2.8x3.5x0.7	9.0 - 9.9	100	Cool White	5000K	125	138	80
67-23ST/KK4C-H5757S3BS69099Z10/2T	2.8x3.5x0.7	9.0 - 9.9	100	Cool White	5700K	125	138	80
67-23ST/KK4C-H6565S3BS69099Z10/2T	2.8x3.5x0.7	9.0 - 9.9	100	Cool White	6500K	125	138	80

Low Middle Power LED ▌67-24ST (2835)

UNIT : mm

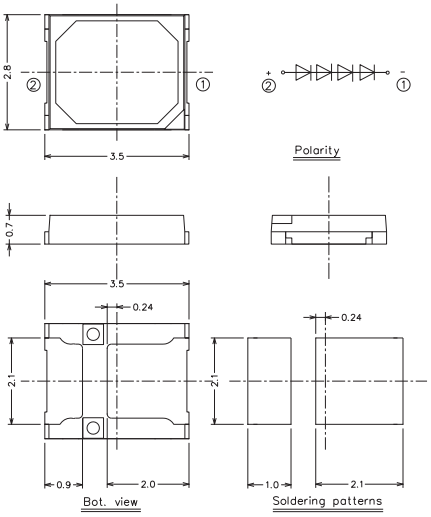

1W / 12V / 80mA

Product	Size (LxWxHmm)	Forward Voltage (V)	Forward Current (mA)	Color	CCT (K)	Luminous Flux (Min.)	Luminous Flux (Typ.)	CRI (min.)
67-24ST/KK4C-H27115130Z8/2T	2.8x3.5x0.7	13	80	Warm White	2700K	115	127	80
67-24ST/KK4C-H30120130Z8/2T	2.8x3.5x0.7	13	80	Warm White	3000K	120	132	80
67-24ST/KK4C-H35120130Z8/2T	2.8x3.5x0.7	13	80	Warm White	3500K	120	132	80
67-24ST/KK4C-H40125130Z8/2T	2.8x3.5x0.7	13	80	Neutral White	4000K	125	138	80
67-24ST/KK4C-H50125130Z8/2T	2.8x3.5x0.7	13	80	Cool White	5000K	125	138	80
67-24ST/KK4C-H57125130Z8/2T	2.8x3.5x0.7	13	80	Cool White	5700K	125	138	80
67-24ST/KK4C-H65125130Z8/2T	2.8x3.5x0.7	13	80	Cool White	6500K	125	138	80

Low Middle Power LED ▌Color 2835

UNIT : mm

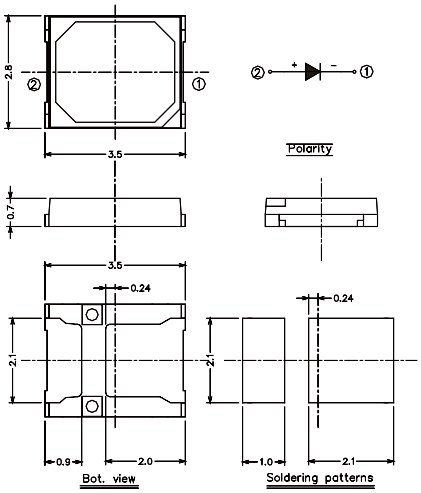

Color 2835 60mA

Product	Size (LxWxHmm)	Forward Voltage (V)	Forward Current (mA)	Color	Wavelength / CCT (nm) (K)	Luminous Flux (Min.)	Luminous Flux (Typ.)
67-21S/NFR2C-P2050A3B21522Z6/2T	2.8x3.5x0.7	1.5V-2.2V	60mA	Far Red	720-750nm	15	25
67-21S/NDR2C-P5080B2C12029Z6/2T	2.8x3.5x0.7	2.0V-2.9V	60mA	Deep Red	650-680nm	40	60
67-21S/R2C-D2030B8L31926Z6/2T	2.8x3.5x0.7	1.9V-2.6V	60mA	Red	620-630nm	9	10
67-21S/Y2C-D8595B7L32128Z6/2T	2.8x3.5x0.7	2.1V-2.8V	60mA	Amber	585-595nm	8.5	9.5
67-21S/B3C-D5060D5D72936Z6/2T	2.8x3.5x0.7	2.9V-3.6V	60mA	Royal Blue	450-460nm	2.5	3
67-21S/YK2C-D1720L8M42833Z6/2T	2.8x3.5x0.7	2.8V-3.3V	60mA	PC Amber	585-595nm (1700K-2000K)	17	19

UNIT : mm

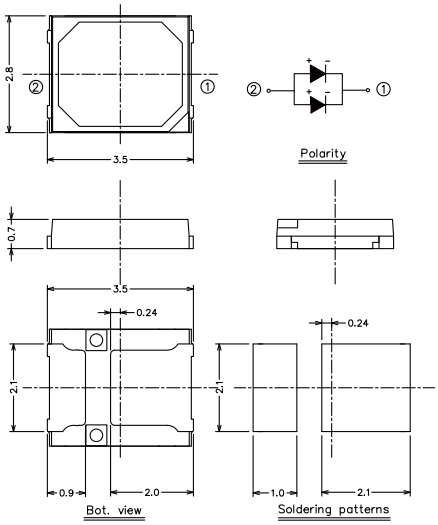

Color 2835 60mA

Product	Size (LxWxHmm)	Forward Voltage (V)	Forward Current (mA)	Color	Wavelength / CCT (nm) (K)	Luminous Flux (Min.)	Luminous Flux (Typ.)
67-22S/G2C-D1525L4L82934Z6/2T	2.8x3.5x0.7	2.9V-3.4V	60mA	Green	515-525nm	13	15
67-22S/B2C-D6075D4D73037Z6/2T	2.8x3.5x0.7	3.0V-3.7V	60mA	Blue	460-475nm	2	3
67-22ST/B2C-P3545D2D92936Z6/2T	2.8x3.5x0.7	2.9V-3.6V	60mA	Violet	435-445nm	1	3

Low Middle Power LED ▌62-227ET (5630 HE)

UNIT : mm

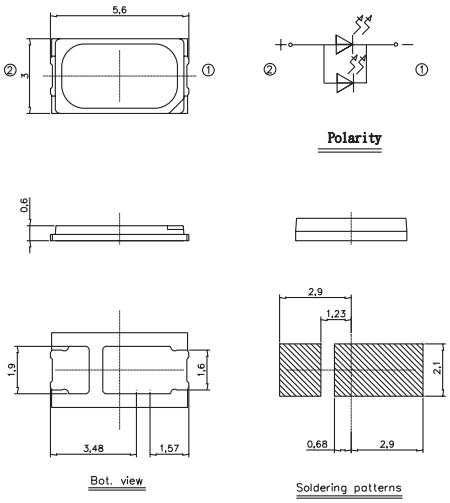

5630-KK7D / 0.2W

Product	Size (LxWxHmm)	Forward Voltage (V)	Forward Current (mA)	Color	CCT (K)	Luminous Flux (Min.)	Luminous Flux (Typ.)	CRI (min.)	Luminous Efficacy (lm/W)
62-227ET/KK7D-3M2727X2Y22530U6/2T	5.6x3.0x0.6	2.5 - 3.0	65	Warm White	2700K	32	34	80	190
62-227ET/KK7D-3M3030X3Y32530U6/2T	5.6x3.0x0.6	2.5 - 3.0	65	Warm White	3000K	33	35	80	196
62-227ET/KK7D-3M3535X3Y32530U6/2T	5.6x3.0x0.6	2.5 - 3.0	65	Warm White	3500K	33	35	80	196
62-227ET/KK7D-3M4040X5Y52530U6/2T	5.6x3.0x0.6	2.5 - 3.0	65	Neutral White	4000K	35	37	80	207
62-227ET/KK7D-3M5050X6Y62530U6/2T	5.6x3.0x0.6	2.5 - 3.0	65	Cool White	5000K	36	38	80	213
62-227ET/KK7D-3M5757X6Y62530U6/2T	5.6x3.0x0.6	2.5 - 3.0	65	Cool White	5700K	36	38	80	213
62-227ET/KK7D-3M6565X5Y52530U6/2T	5.6x3.0x0.6	2.5 - 3.0	65	Cool White	6500K	35	37	80	207

5630-KK8D / 0.2W

Product	Size (LxWxHmm)	Forward Voltage (V)	Forward Current (mA)	Color	CCT (K)	Luminous Flux (Min.)	Luminous Flux (Typ.)	CRI (min.)	Luminous Efficacy (lm/W)
62-227ET/KK8D-3M2727X4Y42530U6/2T	5.6x3.0x0.6	2.5 - 3.0	65	Warm White	2700K	34	36	80	201
62-227ET/KK8D-3M3030X5Y52530U6/2T	5.6x3.0x0.6	2.5 - 3.0	65	Warm White	3000K	35	37	80	207
62-227ET/KK8D-3M3535X5Y52530U6/2T	5.6x3.0x0.6	2.5 - 3.0	65	Warm White	3500K	35	37	80	207
62-227ET/KK8D-3M4040X7Y72530U6/2T	5.6x3.0x0.6	2.5 - 3.0	65	Neutral White	4000K	37	38	80	213
62-227ET/KK8D-3M5050X8Y82530U6/2T	5.6x3.0x0.6	2.5 - 3.0	65	Cool White	5000K	38	39	80	218
62-227ET/KK8D-3M5757X8Y82530U6/2T	5.6x3.0x0.6	2.5 - 3.0	65	Cool White	5700K	38	39	80	218
62-227ET/KK8D-3M6565X7Y72530U6/2T	5.6x3.0x0.6	2.5 - 3.0	65	Cool White	6500K	37	38	80	213

UV ▌ELUFA

UNIT : mm

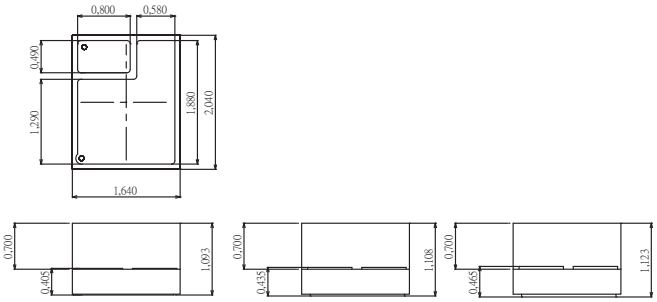

365-405nm / 0.08W / 3.5V / 20mA

Product	Size (LxWxHmm)	Forward Voltage (V)	Forward Current (mA)	Wavelength (nm)	Radiant Flux (mW)	
					Min.	TYP
ELUFA-Q30U1-0VPNE-DP2P3	2.04x1.64x0.75	2.95-4.15	20	365~375	15.0	20
ELUFA-Q40U1-0VPNE-DP5P6	2.04x1.64x0.75	2.95-4.15	20	380-390	20.0	25
ELUFA-Q40U1-0VPNE-DP7P8	2.04x1.64x0.75	2.95-4.15	20	390-400	20.0	25
ELUFA-Q40U1-0VPNE-DP9P0	2.04x1.64x0.75	2.95-4.15	20	400-410	20.0	25

UV ▌ELUMFA

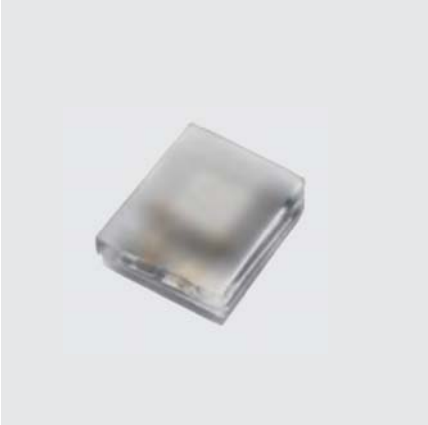

UNIT : mm

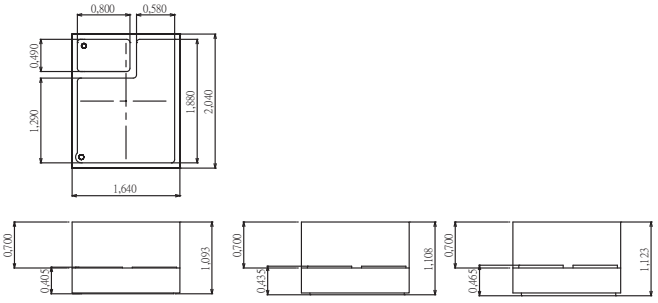

365-405nm / 0.3W / 3V / 100mA

Product	Size (LxWxHmm)	Forward Voltage (V)	Forward Current (mA)	Wavelength (nm)	Radiant Flux (mW) (Min)
ELUMFA-Q60U0-OUPNE-DP2P3(ZR)	2.04x1.64x0.75	3.2~3.8	60	365-375	50

UV ▌ELUHFA

UNIT : mm

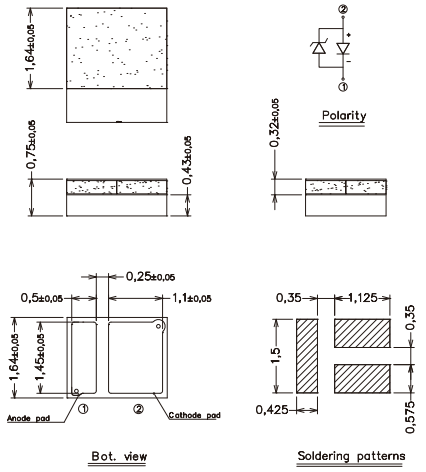

365-405nm / 1.8W / 3.6V / 700mA

Product	Size (LxWxHmm)	Forward Voltage (V)	Forward Current (mA)	Wavelength (nm)	Radiant Flux (mW)	
					Min.	TYP
ELUFA-R30U1-0VPNE-DP2P3	2.04x1.64x0.75	3.25-4.15	500	365-375	550.0	600
ELUFA-R40U1-0VPNE-CP5P6	2.04x1.64x0.75	2.95-3.85	500	380-390	600.0	660
ELUFA-R50U1-0VPNE-CP7P8	2.04x1.64x0.75	2.95-3.85	500	390-400	700.0	770
ELUFA-R50U1-0VPNE-CP9P0	2.04x1.64x0.75	2.95-3.85	500	400-410	700.0	770

UV ▌ELULA

UNIT : mm

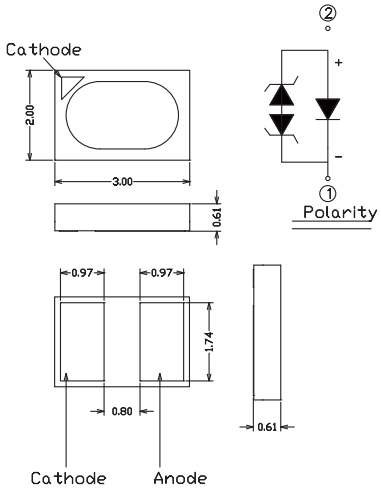

365-405nm / 0.08W / 3.5V / 20mA

Product	Size (LxWxHmm)	Forward Voltage (V)	Forward Current (mA)	Wavelength (nm)	Radiant Flux (mW)	
					Min.	TYP
ELULA-Q40U1-0VPNE-DP2P3	3.0x2.0x0.65	3.4-4	20	365-375	20	25
ELULA-Q50U1-0VPNE-DP5P6	3.0x2.0x0.65	3.2-3.8	20	380-390	25	30
ELULA-Q50U1-0VPNE-DP7P8	3.0x2.0x0.65	3-3.6	20	390-400	25	30
ELULA-Q50U1-0VPNE-DP9P0	3.0x2.0x0.65	3-3.6	20	400-410	25	30

UV ▌ELULLA

UNIT : mm

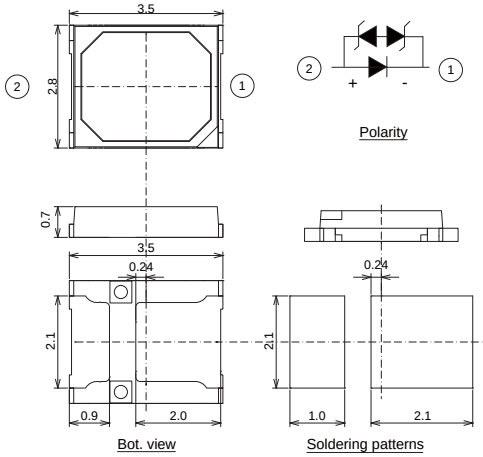

365nm / 0.3W / 3.5V / 100mA

Product	Size (LxWxHmm)	Forward Voltage (V)	Forward Current (mA)	Wavelength (nm)	Radiant Flux (mW)
					TYP
ELUA2835TGB-P6080R83240100-V21M	2.8x3.5x0.7	3.2-4.0	100	360-380	97

UV ▌ELUMA

UNIT : mm

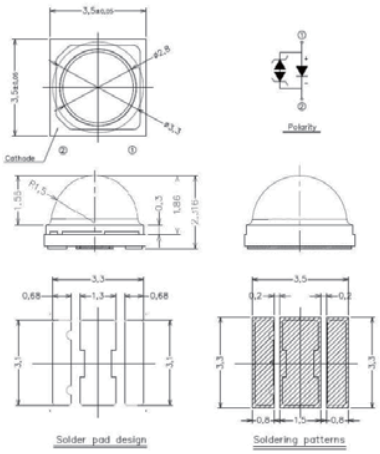

365-405nm / 1.8W / 3.6V / 700mA

Product	Size (LxWxHmm)	Forward Voltage (V)	Forward Current (mA)	Wavelength (nm)	Radiant Flux (mW)	
					Min.	TYP
ELUMA-R51U1-0VPNE-DP2P3	3.5x3.5x2.35	3.25-4.15	500	365-375	700.0	800
ELUMA-R71U1-0VPNE-CP5P6	3.5x3.5x2.35	2.95-3.85	500	380-390	900.0	1000
ELUMA- R71U1-0VPNE-CP7P8	3.5x3.5x2.35	2.95-3.85	500	390-400	900.0	1000
ELUMA- R71U1-0VPNE-CP9P0	3.5x3.5x2.35	2.95-3.85	500	400-410	900.0	1000

UV ▌ELUM5A

UNIT : mm

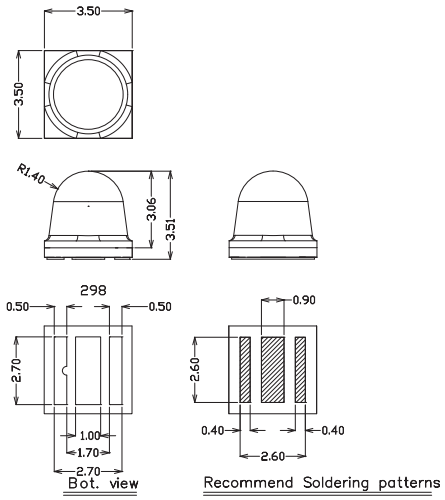

365-405nm / 1.8W / 3.6V / 700mA

Product	Size (LxWxHmm)	Forward Voltage (V)	Forward Current (mA)	Wavelength (nm)	Radiant Flux (mW)	
					Min.	TYP
ELUM5A-R51U1-0VPNE-DP2P3	3.5x3.5x3.5	3.25-4.15	500	365-375	700.0	800
ELUM5A-R71U1-0VPNE-CP5P6	3.5x3.5x3.5	2.95-3.85	500	380-390	900.0	1000
ELUM5A-R71U1-0VPNE-CP7P8	3.5x3.5x3.5	2.95-3.85	500	390-400	900.0	1000
ELUM5A-R71U1-0VPNE-CP9P0	3.5x3.5x3.5	2.95-3.85	500	400-410	900.0	1000

UV ▌ELUM3A

UNIT : mm

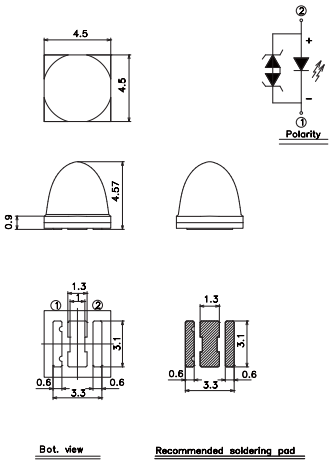

365-405nm / 1.8W / 3.5V / 700mA

Product	Size (LxWxHmm)	Forward Voltage (V)	Forward Current (mA)	Wavelength (nm)	Radiant Flux (mW)	
					Min.	TYP
ELUM3A-R51U1-0VPNE-DP2P3	4.5x4.5x4.5	3.25-4.15	500	365-375	700.0	800
ELUM3A-R71U1-0VPNE-CP5P6	4.5x4.5x4.5	2.95-3.85	500	380-390	900.0	1000
ELUM3A-R71U1-0VPNE-CP7P8	4.5x4.5x4.5	2.95-3.85	500	390-400	900.0	1000
ELUM3A-R71U1-0VPNE-CP9P0	4.5x4.5x4.5	2.95-3.85	500	400-410	900.0	1000

UV ELUC

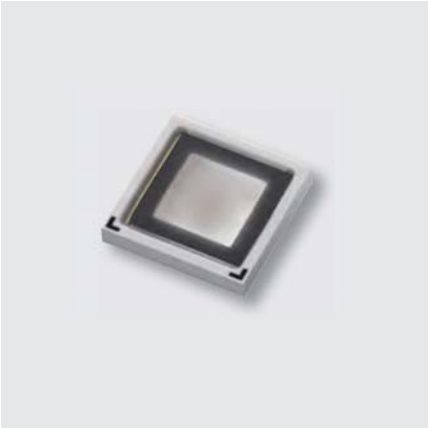

UNIT : mm

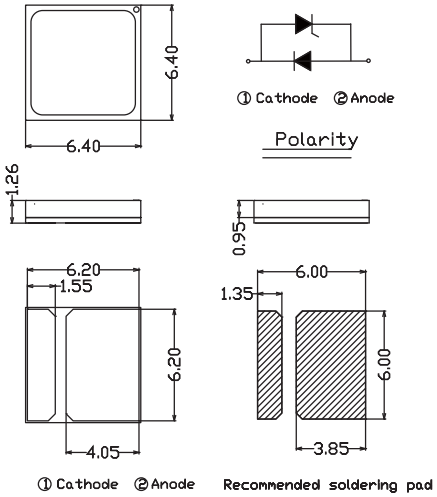

270-290nm

Product	Size (LxWxHmm)	Forward Voltage (V)	Forward Current (mA)	Wavelength (nm)	Radiant Flux (mW)
					TYP
ELUC6464LUB-P7080Q45272350-SD1Q	6.4x6.4x1.0	6.3	350	270-290	23

Flash LED ❙ High Power Flash LED ❙ 2016 Package Dual Type

UNIT : mm

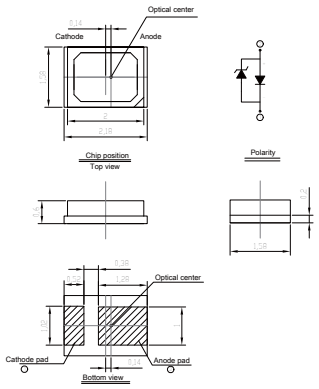

Product	Size (LxWxHmm)	Color	CCT (K)	Typ. Luminous Flux (lm)	Forward Voltage (V)	I_F (mA)
ELEM-2025F3F82838Z15-T4BN	2.18x1.58x0.6	Warm White	2000~2500	45	2.85~3.85	150
ELEM-5060F4F92838Z15-T4BN	2.18x1.58x0.6	White	5000~6000	55	2.85~3.85	150

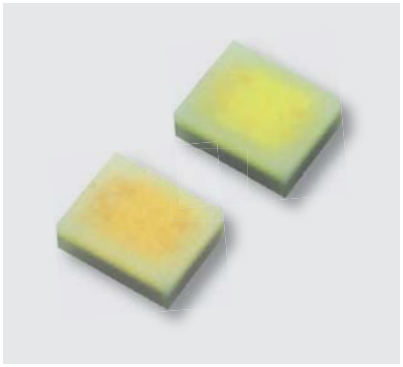

UNIT : mm

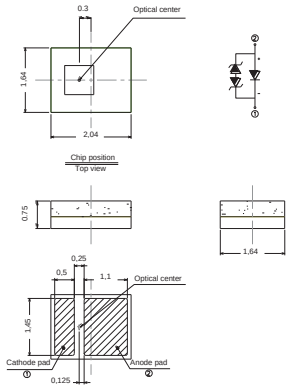

Product	Size (LxWxHmm)	Color	CCT (K)	Typ. Luminous Flux (lm)	Forward Voltage (V)	I_F (mA)
ELCH05-NB1924J3J6294310-N1S	2.04x1.64x0.75	Warm White	1950~2450	140	2.95~4.35	1000
ELCH05-NB5060J4J6294310-N1S	2.04x1.64x0.75	White	5000~6000	160	2.95~4.35	1000

UNIT : mm

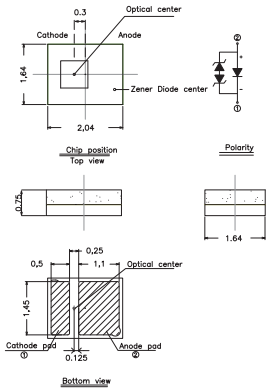

Product	Size (LxWxHmm)	Color	CCT (K)	Typ. Luminous Flux (lm)	Forward Voltage (V)	I_F (mA)
ELCH07-NB1924J5J7283910-FCM	2.04x1.64x0.75	Warm White	200~2500	230	2.85~3.95	1000
ELCH07-NB5060J6J8283910-FCS	2.04x1.64x0.75	White	5500~6500	250	2.85~3.95	1000
ELCH08-NB1924J6J8283910-FDM	2.04x1.64x0.75	Warm White	1950~2450	250	2.85~3.95	1000
ELCH08-NB5060J7J9283910-FDS	2.04x1.64x0.75	White	5500~6500	300	2.85~3.95	1000

Flash LED ❙ High Power Flash LED ❙ 2016 Package

UNIT : mm

T2

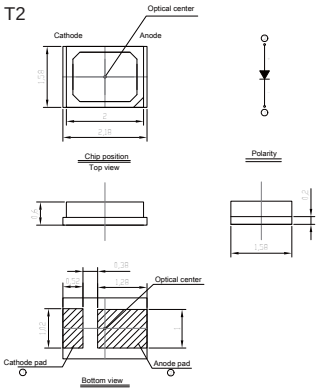

T4

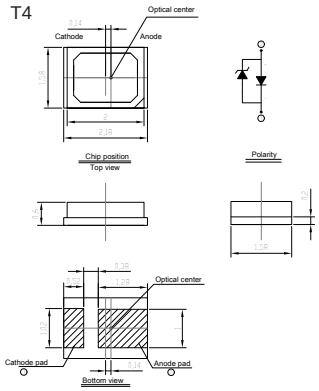

Product	Size (LxWxHmm)	Color	CCT (K)	Typ. Luminous Flux (lm)	Forward Voltage (V)	I_F (mA)
ELEM-5070E6F22838Z6-T2W	2.18x1.58x0.6	○White	5000~7000	19	2.8~3.85	60
ELEM-5070F3F82838Z15-T4W	2.18x1.58x0.6	○White	5000~7000	45	2.85~3.85	150

UNIT : mm

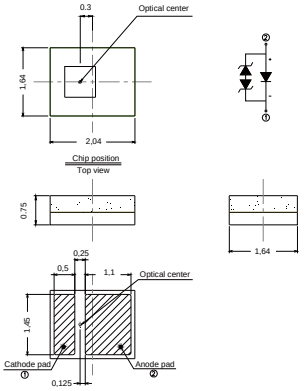

Product	Size (LxWxHmm)	Color	CCT (K)	Typ. Luminous Flux (lm)	Forward Voltage (V)	I_F (mA)
ELCH04-NF5070F9J3294105-N1S	2.04x1.64x0.75	○White	5000~7000	110	2.95~4.15	500
ELCH05-NB5065J4J6294310-N1S	2.04x1.64x0.75	○White	5000~6500	160	2.95~4.35	1000

UNIT : mm

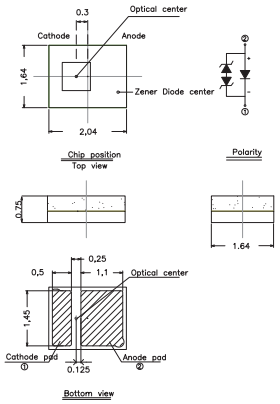

Product	Size (LxWxHmm)	Color	CCT (K)	Typ. Luminous Flux (lm)	Forward Voltage (V)	I_F (mA)
ELCH07-NB5060J6J8283910-FCS	2.04x1.64x0.75	○White	5000~6000	250	2.85~3.95	1000
ELCH08-NB5060J7J9283910-FDS	2.04x1.64x0.75	○White	5000~6000	300	2.85~3.95	1000

Flash LED ❙ High Power Flash LED ❙ 2016 Package HCRI Type

UNIT : mm

T2

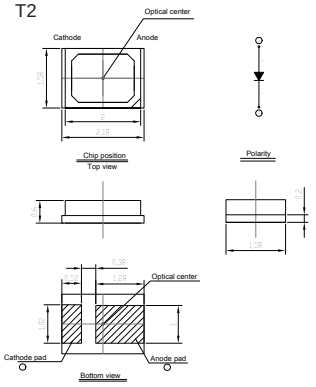

T4

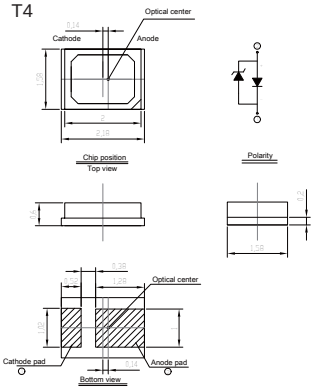

Product	Size (LxWxHmm)	Color	CCT (K)	Typ. Luminous Flux (lm)	Forward Voltage (V)	I_F (mA)
ELEM-KB4060E6F22838Z6-T2S	2.18x1.58x0.6	○White	4000~6000	18	2.8~3.85	60
ELEM-KB4060F2F72838Z15-T4S	2.18x1.58x0.6	○White	4000~6000	45	2.85~3.85	150

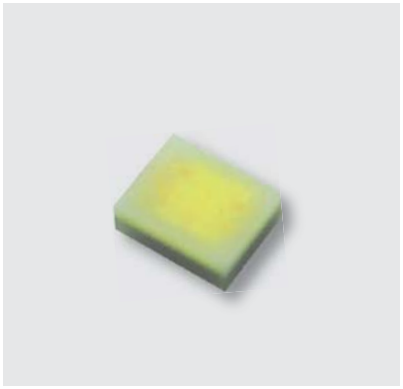

UNIT : mm

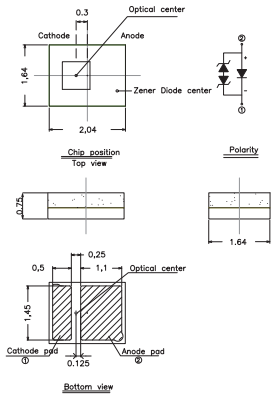

Product	Size (LxWxHmm)	Color	CCT (K)	Typ. Luminous Flux (lm)	Forward Voltage (V)	I_F (mA)
ELCH03-KB4050F6F8284103-N1S	2.04x1.64x0.75	○White	4000~5000	75	2.8~4.15	350

UNIT : mm

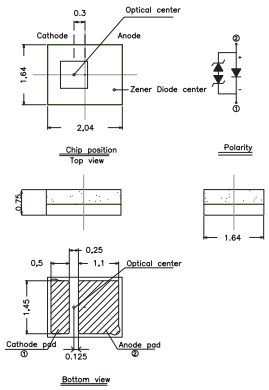

Product	Size (LxWxHmm)	Color	CCT (K)	Typ. Luminous Flux (lm)	Forward Voltage (V)	CRI	I_F (mA)
ELCH08-KB4050J6J8283910-F1S	2.04x1.64x0.75	○White	4000~5000	250	2.85~3.95	>80	1000

Flash LED ▌High Power Flash LED ▌2016 Package HCRI Type

UNIT : mm

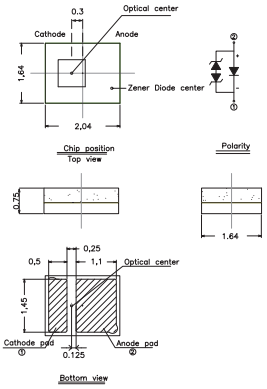

Product	Size (LxWxHmm)	Color	CCT (K)	Typ. Luminous Flux (lm)	Forward Voltage (V)	CRI	I_F (mA)
ELCH08-HB3545J5J7283910-FIS	2.04x1.64x0.75	○White	3500~4500	210	2.85~3.95	>90	1000

Flash LED ▌High Power Flash LED ▌1610 Package Dual Type

UNIT : mm

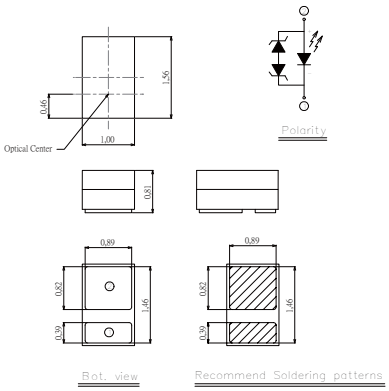

Product	Size (LxWxHmm)	Color	CCT (K)	Typ. Luminous Flux (lm)	Forward Voltage (V)	I_F (mA)
ELAT07-NB1924J4J6293910-F1M	1.0x1.56x0.81	◐Warm White	1950K~2450K	190	2.95~3.95	1000
ELAT07-NB5060J6J7293910-F1S	1.0x1.56x0.81	○Cool White	5000K~6000K	230	2.95~3.95	1000

Flash LED ▌High Power Flash LED ▌1610 Package HCRI Type

UNIT : mm

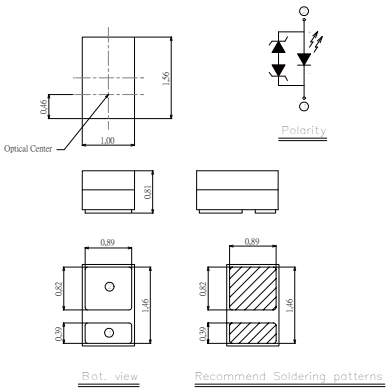

Product	Size (LxWxHmm)	Color	CCT (K)	Typ. Luminous Flux (lm)	Forward Voltage (V)	CRI	I_F (mA)
ELAT07-KB4050J5J7293910-F1S	1.0x1.56x0.81	○White	4000~5000	190	2.95~3.95	>80	1000

Flash LED ▌High Power Flash LED ▌ELDA Series

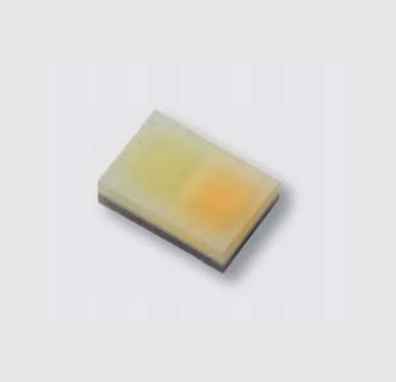

UNIT : mm

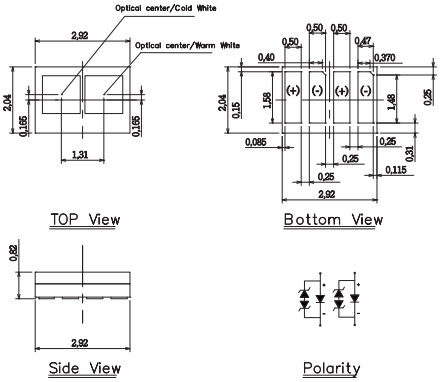

Product	Size (LxWxHmm)	Color	CCT (K)	Typ. Luminous Flux (lm)	Forward Voltage (V)	CRI	If(mA)
ELDA06-HB2555J3J8293910-FCX	2.92x2.04x0.82	○White	5000~6000 2250~2750	220 170	2.95~3.95	90	1000

Flash LED ▌High Power Flash LED ▌CSP Series

UNIT : mm

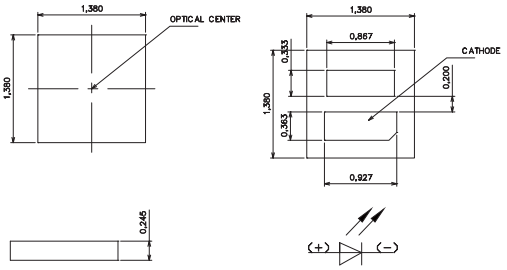

Product	Size (LxWxHmm)	Color	CCT (K)	Typ. Luminous Flux (lx)	Forward Voltage (V)	I_F (mA)
ELCS14B-NB5060J7J9283910-F4Z	1.38x1.38x0.245	○White	5000~6000	290	2.85~3.95	1000
ELCS14B-NB2025J5J7283910-F4Z	1.38x1.38x0.245	○White	2000~2500	210	2.85~3.95	1000

Flash LED ❙ High Power Flash LED ❙ Module Type

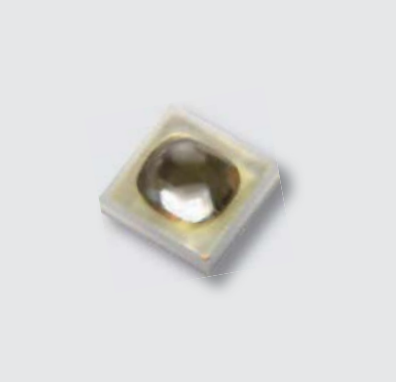

UNIT : mm

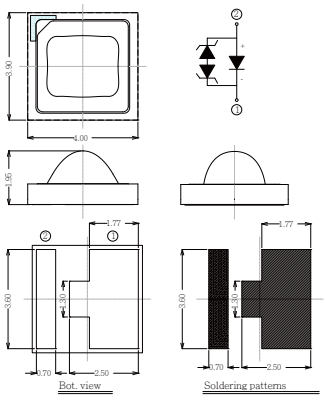

Product	Size (LxWxHmm)	Color	CCT (K)	Typ. Illuminance (lx)	Forward Voltage (V)	I_F (mA)
ELYU03-5070J5J7294310-N0	4.0x3.9x1.95	❍ White	5000~7000	265	2.95~4.35	1000
ELYU03-5060J5J7294310-N0	4.0x3.9x1.95	❍ White	5000~7000	265	2.95~4.35	1000

UNIT : mm

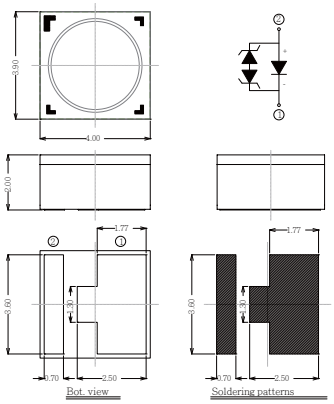

Product	Size (LxWxHmm)	Color	CCT (K)	Typ. Luminous Flux (lx)	Forward Voltage (V)	I_F (mA)
ELCU02-5070J5J7294310-N1	4.0x3.9x2	❍ White	5000~7000	150	2.95~4.35	1000

UNIT : mm

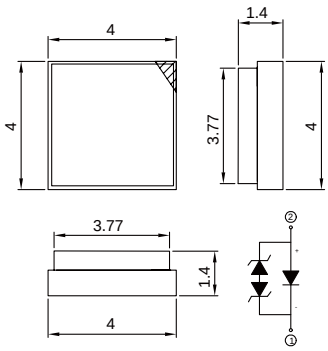

Product	Size (LxWxHmm)	Color	CCT (K)	Typ. Luminous Flux (lx)	Forward Voltage (V)	I_F (mA)
ELCU03-NF5060J3J5294110-E1S	4.0x4.0x1.4	❍ White	5000~6000	170	2.95~3.95	1000
ELCU03-NF5060J6J8294110-E1S	4.0x4.0x1.4	❍ White	5000~6000	260	2.95~3.95	1000

SMD LED ▌Subminiature LED Lamps (Leadframe)

UNIT : mm

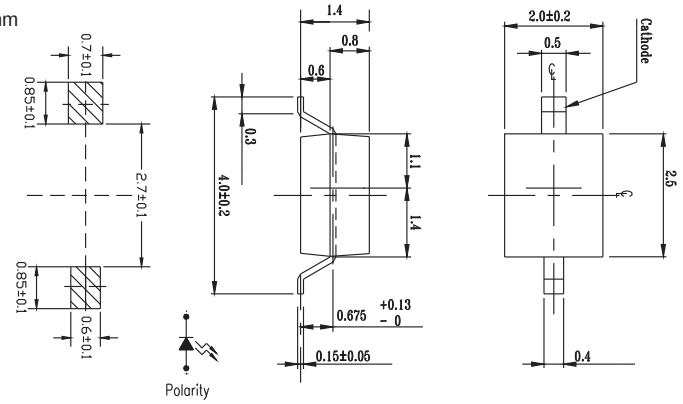

Product	Size (LxWxHmm)	Color	λ_d (nm)/ CIE(x,y)	I_V Min./Typ. (mcd)	I_V Max. (mcd)	V_F Min. (V)	V_F Typ. (V)	V_F Max. (V)	I_F (mA)
28-21SDRC/S530-A3/TR8	2.5x2.0x1.4	Deep Red	639	20 / 27	N	1.7	2	2.4	20
28-21SURC/S530-A2/TR8	2.5x2.0x1.4	Hyper Red	624	11 / 26	N	N	2	2.4	20
28-21UYC/S530-A3/TR8	2.5x2.0x1.4	Super Yellow	589	21 / 33	N	N	2	2.4	20

UNIT : mm

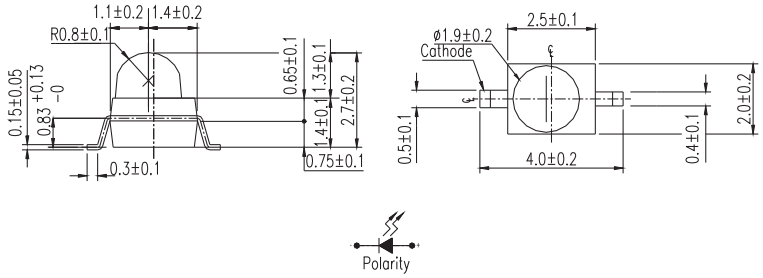

Product	Size (LxWxHmm)	Color	λ_d (nm)/ CIE(x,y)	I_V Min./Typ. (mcd)	I_V Max. (mcd)	V_F Min. (V)	V_F Typ. (V)	V_F Max. (V)	I_F (mA)
91-21SUBC/S400-A6/TR7	2.0x2.5x2.7	Super Blue	470	650 / 800	N	N	3.5	4.0	20
91-21SUGC/S400-A4/TR7	2.0x2.5x2.7	Super Green	525	2000 / 2300	N	N	3.5	4.3	20
91-21SURC/S530-A6/TR7	2.0x2.5x2.7	Hyper Red	624	802 / 1232	N	N	2	2.4	20
91-21SYGC/S530-E4/TR7	2.0x2.5x2.7	Super Yellow Green	573	528 / 594	N	N	2	2.4	20
91-21USRC/S530-A4/TR7	2.0x2.5x2.7	Dark Red	631	344 / 578	N	N	2	2.4	20

SMD LED ▌Subminiature LED Lamps (Leadframe)

UNIT : mm

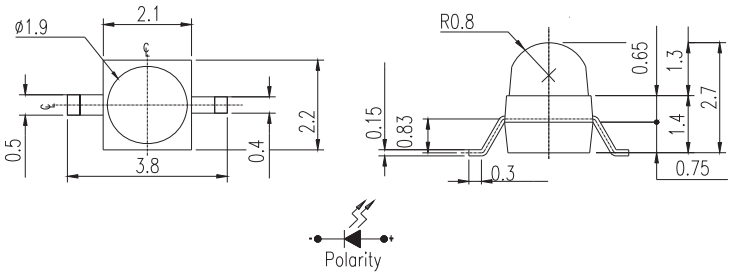

Product	Size (LxWxHmm)	Color	λ_d (nm)/ CIE(x,y)	I_V Min./Typ. (mcd)	I_V Max. (mcd)	V_F Min. (V)	V_F Typ. (V)	V_F Max. (V)	I_F (mA)
95-21SUGC/S400-A4/TR7	2.1x2.2x2.7	Super Green	525	2000 / 2300	N	N	3.5	4.3	20
95-21SYGC/S530-E2/TR7	2.1x2.2x2.7	Brilliant Yellow Green	573	264 / 330	N	1.7	2	2.4	20
95-21USRD/S357/TR7	2.1x2.2x2.7	Dark Red	631	45 / 100	N	N	2	2.4	20
95-21UYC/S530-A5/TR7	2.1x2.2x2.7	Super Yellow	589	793 / 1156	N	N	2	2.4	20

UNIT : mm

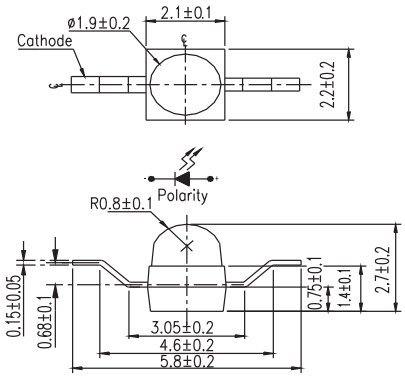

95-21F10/TR10

Product	Size (LxWxHmm)	Color	λ_d (nm)/ CIE(x,y)	I_V Min./Typ. (mcd)	I_V Max. (mcd)	V_F Min. (V)	V_F Typ. (V)	V_F Max. (V)	I_F (mA)
95-21SDRC/S530-A3/TR10	2.1x2.2x2.7	Brilliant Red	639	330 / 495	N	1.7	2	2.4	20
95-21SUBC/S400-A5/TR10	2.1x2.2x2.7	Super Blue	470	500 / 800	N	N	3.5	4.3	20

SMD LED ▌Surface Mount Chip LED (PCB) ▌Top View LED

UNIT : mm

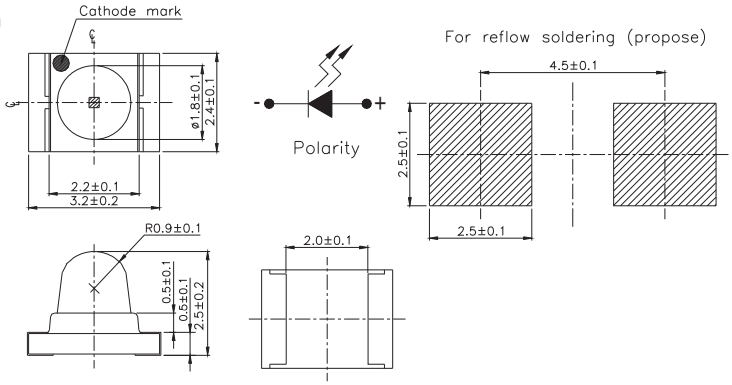

Product	Size (LxWxHmm)	Color	λ_d (nm)/ CIE(x,y)	I_V Min./Typ. (mcd)	I_V Max. (mcd)	V_F Min./Typ. (V)	V_F Max. (V)	I_F (mA)
42-21/BHC-AUW/1T	3.2x2.4x2.5	Blue	470	450	1800	2.7 / 3.3	3.7	20

UNIT : mm

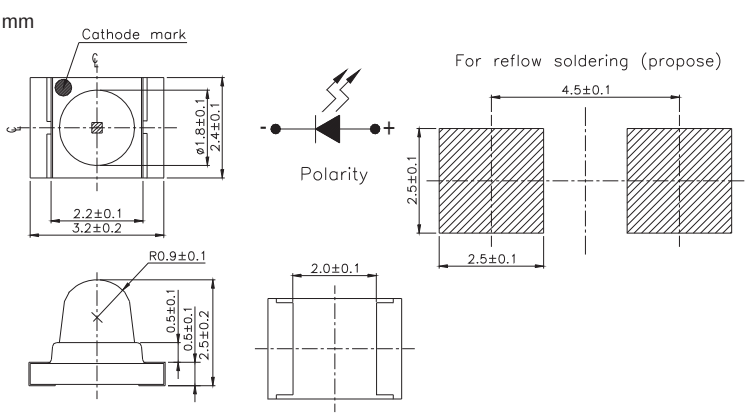

Product	Size (LxWxHmm)	Color	λ_d (nm)/ CIE(x,y)	I_V Min./Typ. (mcd)	I_V Max. (mcd)	V_F Min./Typ. (V)	V_F Max. (V)	I_F (mA)
42-21A/BHC-ZV1W2N/1T	3.2x2.4x2.5	Blue	470	715	1800	2.65	3.75	20
42-21A/GHC-YX1Y2N/1T	3.2x2.4x2.5	Brilliant Green	525	1800	4500	2.7	3.7	20

SMD LED ▌Surface Mount Chip LED (PCB) ▌Top View 0402 (0.2T~0.5T)

UNIT : mm

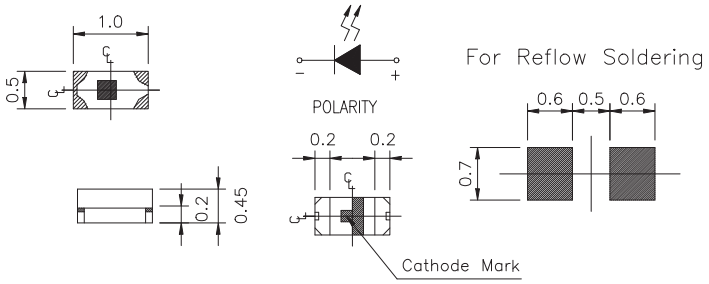

Product	Size (LxWxHmm)	Color	λ_d (nm)/CIE(x,y)	I_V Min./Typ. (mcd)	I_V Max. (mcd)	V_F Min./ Typ. (V)	V_F Max. (V)	I_F (mA)
16-213/BHC-AN1P2/3T	1.0x0.5x0.45	Blue	470	28.5	72	2.7 / 3.3	3.7	20
16-213/BHC-ZL1M2QY/3T	1.0x0.5x0.45	Blue	470	11.5	28.5	2.7	3.2	5
16-213/GHC-YR1S1/3T	1.0x0.5x0.45	Brilliant Green	525	112	225	2.7 / 3.3	3.7	20
16-213/R6C-A2225VZ/3T	1.0x0.5x0.45	Brilliant Red	624	20	40.5	1.7	2.2	10
16-213/T3D-AP1Q2QY/3T	1.0x0.5x0.45	Pure White	x=0.29, y=0.30	45	112	2.7	3.2	5
16-213/T7D-AQ1R1QY/3T	1.0x0.5x0.45	Pure White	x=0.29, y=0.30	72	140	2.7	3.2	5

UNIT : mm

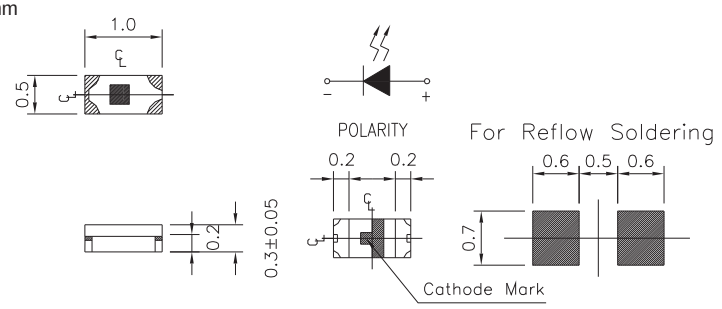

Product	Size (LxWxHmm)	Color	λ_d (nm)/CIE(x,y)	I_V Min./Typ. (mcd)	I_V Max. (mcd)	V_F Min./Typ. (V)	V_F Max. (V)	I_F (mA)
16-216/T3D-AQ1R2TY/3T	1.0x0.5x0.3	Pure White	x=0.29, y=0.30	72	180	2.6	3	5

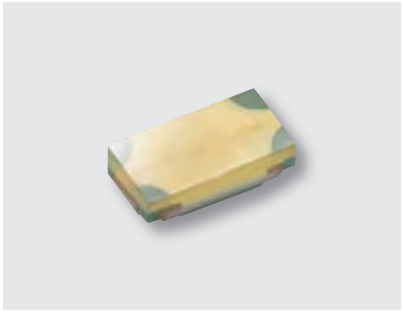

UNIT : mm

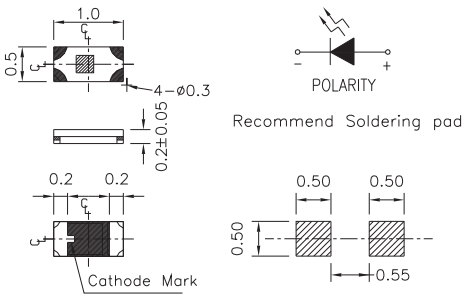

Product	Size (LxWxHmm)	Color	λ_d (nm)/CIE(x,y)	I_V Min./Typ. (mcd)	I_V Max. (mcd)	V_F Min./Typ. (V)	VF Max. (V)	I_F (mA)
16-219A/T2D-AR2T1QY/3T	1.0x0.5x0.2	Pure White	x=0.29, y=0.30	140	360	2.7	3.2	5

SMD LED ▌Surface Mount Chip LED (PCB) ▌Top View 0603 (0.2T~0.8T)

UNIT : mm

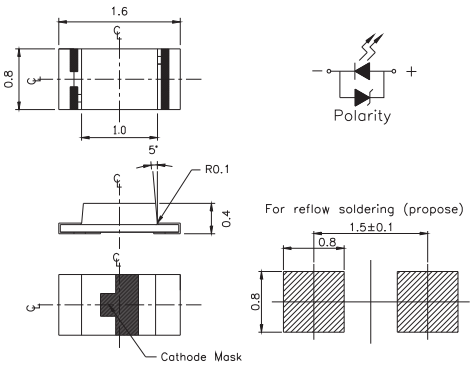

Product	Size (LxWxHmm)	Color	λ_d (nm)/CIE(x,y)	I_V Min./Typ. (mcd)	I_V Max. (mcd)	V_F Min./Typ. (V)	V_F Max. (V)	I_F (mA)
19-117/BHC-YJ2K2TX/3T	1.6x0.8x0.4	● Blue	470	5.8	11.5	2.6	3	2
19-117/BHC-ZL1M2RY/3T	1.6x0.8x0.4	● Blue	470	11.5	28.5	2.5	3.1	5
19-117/T1D-AP2Q2QY/3T	1.6x0.8x0.4	○ Pure White	x=0.274, y=0.226	57	112	2.7	3.2	5

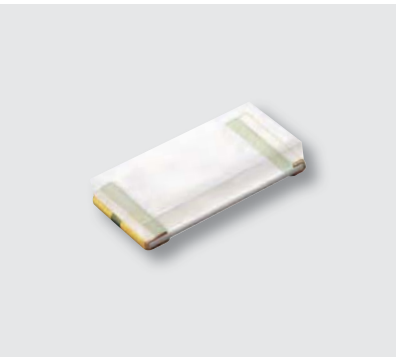

UNIT : mm

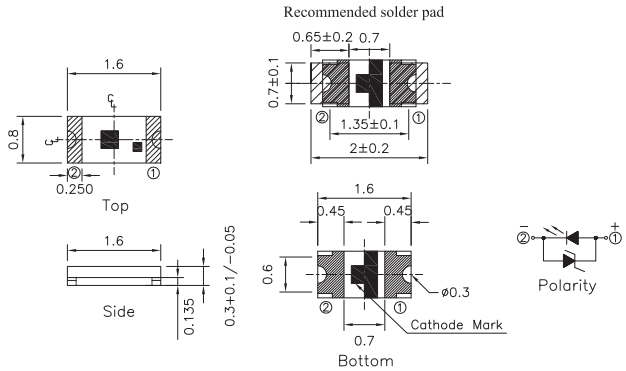

Product	Size (LxWxHmm)	Color	λ_d (nm)/CIE(x,y)	I_V Min./Typ. (mcd)	I_V Max. (mcd)	V_F Min./Typ. (V)	V_F Max. (V)	I_F (mA)
19-118/BHC-ZL1M2QY/3T	1.6x0.8x0.3	● Blue	470	11.5	28.5	2.7	3.2	5

SMD LED ▌Surface Mount Chip LED (PCB) ▌Top View 0603 (0.2T~0.8T)

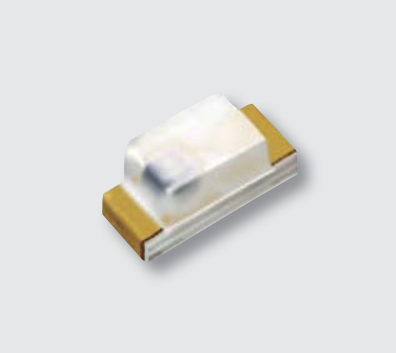

UNIT : mm

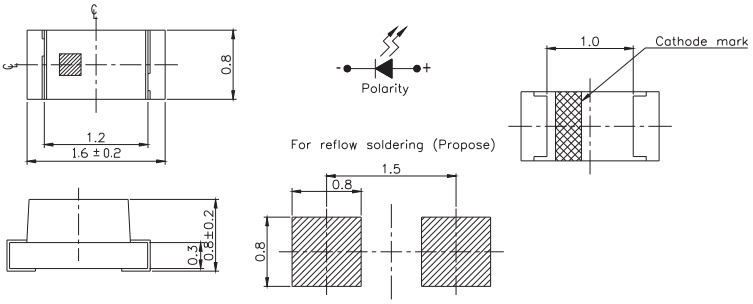

Product	Size (LxWxHmm)	Color	λ_d (nm)/CIE(x,y)	I_V Min./Typ. (mcd)	I_V Max. (mcd)	V_F Min./ Typ. (V)	V_F Max. (V)	I_F (mA)
19-21/B6C-AP2Q2M/3T	1.6x0.8x0.8	Blue	470	57	112	2.75	3.95	20
19-21/BHC-AP1Q2/3T	1.6x0.8x0.8	Blue	470	45	112	2.7 / 3.3	3.7	20
19-21/BHC-YL1M1RY/3T	1.6x0.8x0.8	Blue	470	11.5	22.5	2.5	3.1	5
19-21/BHC-ZQ1R2N/3T	1.6x0.8x0.8	Blue	470	72	180	2.7	3.7	20
19-21/G6C-AL1M2LY/3T	1.6x0.8x0.8	Brilliant Yellow Green	573	11.5	28.5	1.7	2.3	5
19-21/G6C-FM1N2B/3T	1.6x0.8x0.8	Brilliant Yellow Green	573	18	45	1.75	2.35	20
19-21/G6C-FP1Q1L/3T	1.6x0.8x0.8	Brilliant Yellow Green	573	45	90	1.7	2.3	20
19-21/GHC-YN1P2QY/3T	1.6x0.8x0.8	Brilliant Green	525	28.5	72	2.7	3.2	5
19-21/GPC-FL1M2B/3T	1.6x0.8x0.8	Green	562	11.5	28.5	1.75	2.35	20
19-21/R6C-AL2N1VY/3T	1.6x0.8x0.8	Brilliant Red	624	14.5	36	1.7	2.2	5
19-21/R6C-FP1Q2L/3T	1.6x0.8x0.8	Brilliant Red	624	45	112	1.7	2.3	20
19-21/R7C-AK1L2BY/3T	1.6x0.8x0.8	Deep Red	631	7.2	18	1.75	2.35	5
19-21/R7C-AN2Q1B/3T	1.6x0.8x0.8	Deep Red	631	36	90	1.75	2.35	20
19-21/R8C-FN2Q1L/3T	1.6x0.8x0.8	Deep Red	639	36	90	1.7	2.3	20
19-21/S2C-AL2M2VY/3T	1.6x0.8x0.8	BrilliantOrange	605	14.5	28.5	1.7	2.2	5
19-21/S2C-AQ1R2B/3T	1.6x0.8x0.8	BrilliantOrange	605	72	180	1.75	2.35	20
19-21/T1D-ANPHY/3T	1.6x0.8x0.8	Pure White	x=0.274, y=0.226	28.5	72	2.7	3.15	5
19-21/T1D-CPQTY/3T	1.6x0.8x0.8	Pure White	x=0.274, y=0.226	45	112	2.6	3	5
19-21/Y2C-AL1M2VY/3T	1.6x0.8x0.8	Brilliant Yellow	589	11.5	28.5	1.7	2.2	5
19-21/Y2C-CP1Q2B/3T	1.6x0.8x0.8	Brilliant Yellow	589	45	112	1.75	2.35	20

SMD LED ▌Surface Mount Chip LED (PCB) ▌Top View 0603 (0.2T~0.8T)

UNIT : mm

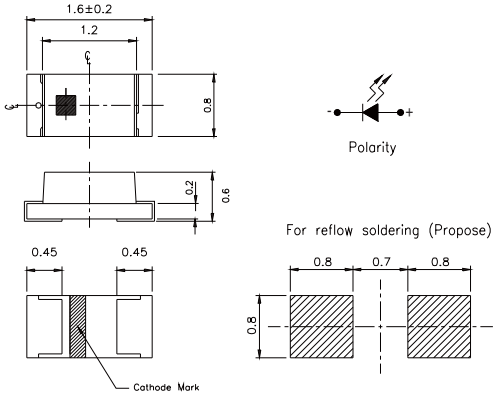

Product	Size (LxWxHmm)	Color	λ_d (nm)/CIE(x,y)	I_V Min./Typ. (mcd)	I_V Max. (mcd)	V_F Min./Typ. (V)	V_F Max. (V)	I_F (mA)
19-213A/T1D-CP2Q2HY/3T	1.6x0.8x0.6	○ Pure White	x=0.274, y=0.226	57	112	2.7	3.15	5

UNIT : mm

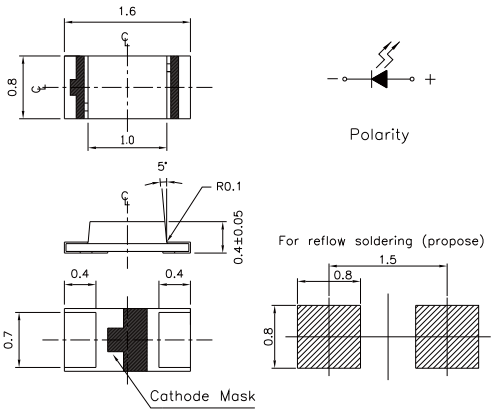

Product	Size (LxWxHmm)	Color	λ_d (nm)/CIE(x,y)	I_V Min./Typ. (mcd)	I_V Max. (mcd)	V_F Min./ Typ. (V)	V_F Max. (V)	I_F (mA)
19-217/B9C-ANQE/3T	1.6x0.8x0.4	● Blue	470	28.5	112	2.75	3.65	20
19-217/BHC-AN1P2/3T	1.6x0.8x0.4	● Blue	470	28.5	72	2.7 / 3.3	3.7	20
19-217/BHC-XK1L2B11X/3T	1.6x0.8x0.4	● Blue	470	7.2	18	2.6	2.9	2
19-217/BHC-YL2M2TY/3T	1.6x0.8x0.4	● Blue	470	14.5	28.5	2.6	3	5
19-217/G7C-AL1M2B/3T	1.6x0.8x0.4	● Brilliant Yellow Green	573	11.5	28.5	1.75	2.35	20
19-217/GHC-YR1S2/3T	1.6x0.8x0.4	● Brilliant Green	525	112	285	2.7 / 3.3	3.7	20
19-217/R6C-P1Q2/3T	1.6x0.8x0.4	● Brilliant Red	624	45	112	1.7 / 2	2.4	20
19-217/S2C-AL1M2VY/3T	1.6x0.8x0.4	● Brilliant Orange	605	11.5	28.5	1.7	2.2	5
19-217/S3C-AL2N1VY/3T	1.6x0.8x0.4	● Reddish Orange	615	14.5	36	1.7	2.2	5
19-217/T1D-ANPHY/3T	1.6x0.8x0.4	○ Pure White	x=0.274, y=0.226	28.5	72	2.7	3.15	5
19-217/T1D-JP1Q2QY/3T	1.6x0.8x0.4	○ Pure White	x=0.274, y=0.226	45	112	2.7	3.2	5
19-217/Y5C-AM1N1VY/3T	1.6x0.8x0.4	● Brilliant Yellow	589	18	36	1.7	2.2	5
19-217/Y5C-APQB/3T	1.6x0.8x0.4	● Brilliant Yellow	589	45	112	1.75	2.35	20
19-217/Y5C-AQ2R2/3T	1.6x0.8x0.4	● Brilliant Yellow	589	90	180	1.7 / 2	2.4	20

SMD LED ▌Surface Mount Chip LED (PCB) ▌Top View 0603 (0.2T~0.8T)

UNIT : mm

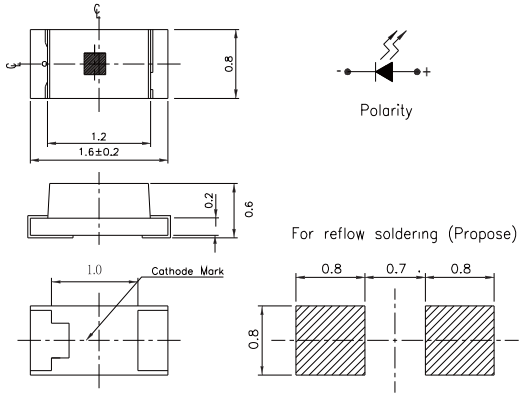

Product	Size (LxWxHmm)	Color	λ_d (nm)/CIE(x,y)	I_V Min./Typ. (mcd)	I_V Max. (mcd)	V_F Min./ Typ. (V)	V_F Max. (V)	I_F (mA)
19-213 /Y2C-CQ1R2/3T	1.6x0.8x0.6	Brilliant Yellow	589	72	180	1.7 / 2	2.4	20
19-213/B7C-AQ2S1B2/3T	1.6x0.8x0.6	Blue	470	90	225	2.9	3.6	20
19-213/BHC-AN1P2/3T	1.6x0.8x0.6	Blue	470	28.5	72	2.7 / 3.3	3.7	20
19-213/G6C-AP1Q2/3T	1.6x0.8x0.6	Brilliant Yellow Green	573	45	112	2	2.4	20
19-213/G6C-BM1N2B/3T	1.6x0.8x0.6	Brilliant Yellow Green	573	18	45	1.75	2.35	20
19-213/G6C-FN2Q1L/3T	1.6x0.8x0.6	Brilliant Yellow Green	573	36	90	1.7	2.3	20
19-213/G6W-FN1P1B/3T	1.6x0.8x0.6	Brilliant Yellow Green	573	28.5	57	1.75	2.35	20
19-213/GHC-XS1T1N/3T	1.6x0.8x0.6	Brilliant Green	525	180	360	2.7	3.7	20
19-213/GHC-YP1Q2QY/3T	1.6x0.8x0.6	Brilliant Green	525	45	112	2.7	3.2	5
19-213/GHC-YR1S2/3T	1.6x0.8x0.6	Brilliant Green	525	112	285	3.5	4	20
19-213/R6C-AM2P1VY/3T	1.6x0.8x0.6	Brilliant Red	624	22.5	57	1.7	2.2	5
19-213/R6C-AN1P2/3T	1.6x0.8x0.6	Brilliant Red	624	28.5	72	1.7 / 2	2.4	20
19-213/R6C-AN2Q1B/3T	1.6x0.8x0.6	Brilliant Red	624	36	90	1.75	2.35	20
19-213/R6C-AP1Q2B/3T	1.6x0.8x0.6	Brilliant Red	624	45	112	1.75	2.35	20
19-213/R6C-AQ1R2B/3T	1.6x0.8x0.6	Brilliant Red	624	72	180	1.75	2.35	20
19-213/R8C-FN1P2/3T	1.6x0.8x0.6	Deep Red	639	28.5	72	1.7 / 2	2.4	20
19-213/S2C-AN1P2B/3T	1.6x0.8x0.6	Brilliant Orange	605	28.5	72	1.75	2.35	20
19-213/S3C-AN2P2B/3T	1.6x0.8x0.6	Reddish Orange	615	36	72	1.75	2.35	20
19-213/T1D-ANPHY/3T	1.6x0.8x0.6	Pure White	x=0.274, y=0.226	28.5	72	2.7	3.15	5
19-213/Y2C-AP1Q2B/3T	1.6x0.8x0.6	Brilliant Yellow	589	45	112	1.75	2.35	20
19-213/Y2C-CN1P2/3T	1.6x0.8x0.6	Brilliant Yellow	589	28.5	72	1.7 / 2	2.4	20
19-213/Y2C-CP1Q2L/3T	1.6x0.8x0.6	Brilliant Yellow	589	45	112	1.7	2.3	20
19-213/Y2C-CQ2R2L/3T	1.6x0.8x0.6	Brilliant Yellow	589	90	180	1.7	2.3	20

SMD LED ▌Surface Mount Chip LED (PCB) ▌Top View 0603 (0.2T~0.8T)

UNIT : mm

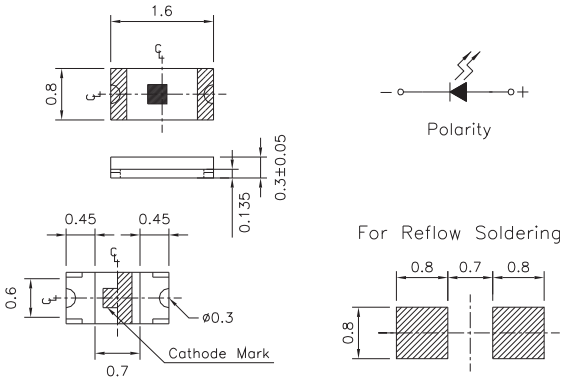

Product	Size (LxWxHmm)	Color	λ_d (nm)/CIE(x,y)	I_V Min./Typ. (mcd)	I_V Max. (mcd)	V_F Min./Typ. (V)	V_F Max. (V)	I_F (mA)
19-218/BHC-ZL1M2QY/3T	1.6x0.8x0.3	Blue	470	11.5	28.5	2.7	3.2	5
19-218/GHC-YR1S2M/3T	1.6x0.8x0.3	Brilliant Green	525	112	285	2.75	3.95	20
19-218/R6C-AL1M2VY/3T	1.6x0.8x0.3	Brilliant Red	624	11.5	28.5	1.7	2.2	5
19-218/R6C-FM2P1B7Y/3T	1.6x0.8x0.3	Brilliant Red	624	22.5	57	1.7	2	5
19-218/T1D-CQ2R2TY/3T	1.6x0.8x0.3	Pure White	x=0.274, y=0.226	90	180	2.6	3	5

UNIT : mm

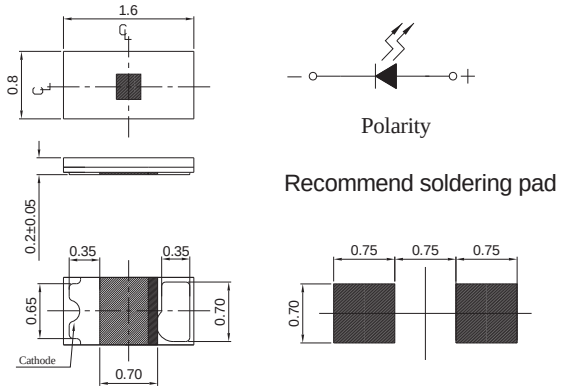

Product	Size (LxWxHmm)	Color	λ_d (nm)/CIE(x,y)	I_V Min./Typ. (mcd)	I_V Max. (mcd)	V_F Min./Typ. (V)	V_F Max. (V)	I_F (mA)
19-219/T3D-AQ2R2TY/3T	1.6x0.8x0.2	Pure White	x=0.274, y=0.226	90	180	2.6	3	5
19-219/T7D-AV1W1E/3T	1.6x0.8x0.2	Pure White	x=0.274, y=0.226	715	1420	2.75	3.65	20
19-219/Y5C-AM1N2VY/3T	1.6x0.8x0.2	Brilliant Yellow	589	18	45	1.7	2.2	5

SMD LED ▌Surface Mount Chip LED (PCB) ▌Top View 0805

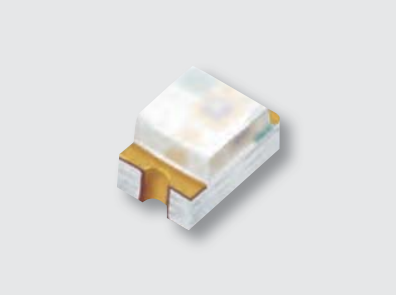

UNIT : mm

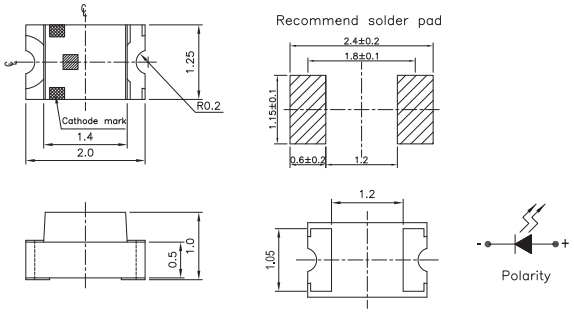

Product	Size (LxWxHmm)	Color	λ_d (nm)/CIE(x,y)	I_V Min./Typ. (mcd)	I_V Max. (mcd)	V_F Min./Typ. (V)	V_F Max. (V)	I_F (mA)
17-11/BHC-AN1P2/3T	2.0x1.25x1	Blue	470	28.5	72	2.7 / 3.3	3.7	20

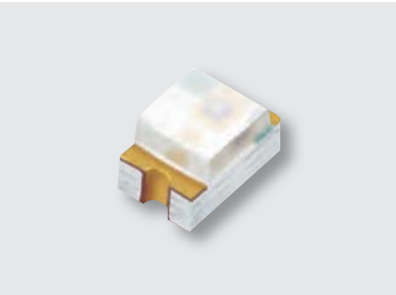

UNIT : mm

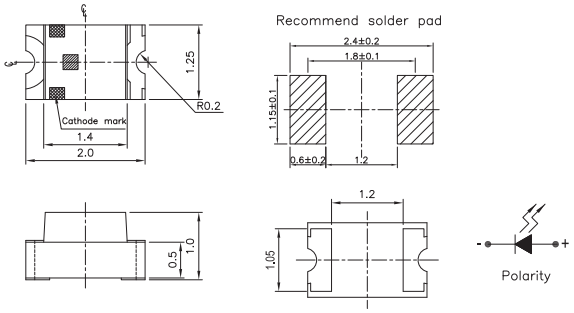

Product	Size (LxWxHmm)	Color	λ_d (nm)/CIE(x,y)	I_V Min./Typ. (mcd)	I_V Max. (mcd)	V_F Min./ Typ. (V)	V_F Max. (V)	I_F (mA)
17-21/BHC-AN1P2/3T	2.0x1.25x1	Blue	470	28.5	72	3.5	4	20
17-21/BHC-AP1Q2/3T	2.0x1.25x1	Blue	470	45	112	2.7 / 3.3	3.7	20
17-21/BHC-XLMJY/3T	2.0x1.25x1	Blue	470	11.5	28.5	2.7	3.1	5
17-21/G6C-AN1P1B/3T	2.0x1.25x1	Brilliant Yellow Green	573	28.5	57	1.75	2.35	20
17-21/G6C-AP1Q1B/3T	2.0x1.25x1	Brilliant Yellow Green	573	45	90	1.75	2.35	20
17-21/G6C-FM1N2B/3T	2.0x1.25x1	Brilliant Yellow Green	573	18	45	1.75	2.35	20
17-21/G6C-FN1P2B/3T	2.0x1.25x1	Brilliant Yellow Green	573	28.5	72	1.75	2.35	20
17-21/G6C-FP1Q1B/3T	2.0x1.25x1	Brilliant Yellow Green	573	45	90	1.75	2.35	20
17-21/GHC-XS1T2M/3T	2.0x1.25x1	Brilliant Green	525	180	450	2.75	3.95	20
17-21/GHC-YR1S2/3T	2.0x1.25x1	Brilliant Green	525	112	285	3.5	4	20
17-21/GPC-AK0M1B/3T	2.0x1.25x1	Green	562	7.2	22.5	1.75	2.35	20
17-21/GVC-AMPB/3T	2.0x1.25x1	Green	565	18	72	1.75	2.35	20
17-21/R6C-AN2Q1B/3T	2.0x1.25x1	Brilliant Red	624	36	90	1.75	2.35	20
17-21/R6C-AP1Q2L/3T	2.0x1.25x1	Brilliant Red	624	45	112	1.7	2.3	20
17-21/R7C-AN2Q1B/3T	2.0x1.25x1	Deep Red	631	36	90	1.75	2.35	20
17-21/S2C-AN1P2B/3T	2.0x1.25x1	Brilliant Orange	605	28.5	72	1.75	2.35	20
17-21/S2C-AP1Q2B/3T	2.0x1.25x1	Brilliant Orange	605	45	112	1.75	2.35	20
17-21/T1D-ANPHY/3T	2.0x1.25x1	Pure White	x=0.274, y=0.226	28.5	72	2.7	3.15	5
17-21/T1D-CP2R1TY/3T	2.0x1.25x1	Pure White	x=0.274, y=0.226	57	140	2.6	3	5
17-21/T1D-KN2P2HY/3T	2.0x1.25x1	Pure White	x=0.274, y=0.226	36	72	2.7	3.15	5
17-21/Y2C-AN1P2/3T	2.0x1.25x1	Brilliant Yellow	589	28.5	72	1.7 / 2	2.4	20
17-21/Y2C-CN1P2B/3T	2.0x1.25x1	Brilliant Yellow	589	28.5	72	1.75	2.35	20
17-21/Y2C-CP2Q2B/3T	2.0x1.25x1	Brilliant Yellow	589	57	112	1.75	2.35	20

SMD LED ▌Surface Mount Chip LED (PCB) ▌Top View 0805

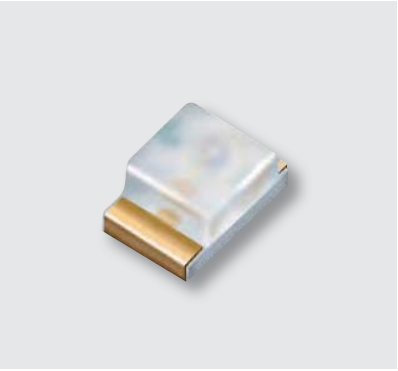

UNIT : mm

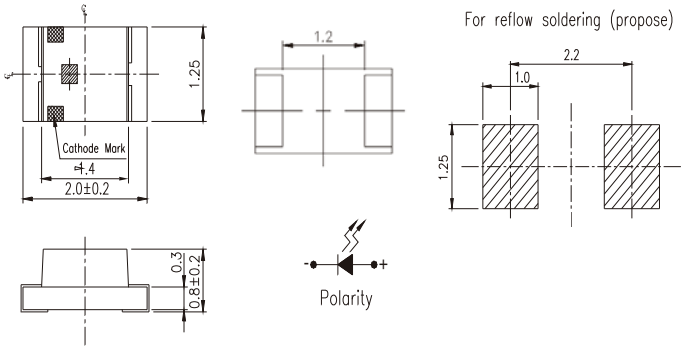

Product	Size (LxWxHmm)	Color	λ_d (nm)/ CIE(x,y)	I_V Min./Typ. (mcd)	I_V Max. (mcd)	V_F Min./Typ. (V)	V_F Max. (V)	I_F (mA)
17-215/B6C-YP2R2/3T	2.0x1.25x0.8	Blue	470	57	180	2.7 / 3.0	3.7	20
17-215/BHC-AN1P2/3T	2.0x1.25x0.8	Blue	470	28.5	72	2.7 / 3.3	3.7	20
17-215/BHC-BP2Q2M/3T	2.0x1.25x0.8	Blue	470	57	112	2.75	3.95	20
17-215/G6C-BM1N2L/3T	2.0x1.25x0.8	Brilliant Yellow Green	573	18	45	1.7	2.3	20
17-215/G6C-FN2P2B/3T	2.0x1.25x0.8	Brilliant Yellow Green	573	36	72	1.75	2.35	20
17-215/R6C-AQ1R2B/3T	2.0x1.25x0.8	Brilliant Red	624	72	180	1.75	2.35	20
17-215/S2C-AQ1R2B/3T	2.0x1.25x0.8	Brilliant Orange	605	72	180	1.75	2.35	20
17-215/S2C-CP2R1B/3T	2.0x1.25x0.8	Brilliant Orange	605	57	140	1.75	2.35	20

SMD LED ▌Surface Mount Chip LED (PCB) ▌Top View 1206

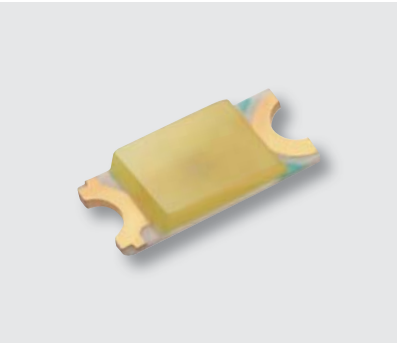

UNIT : mm

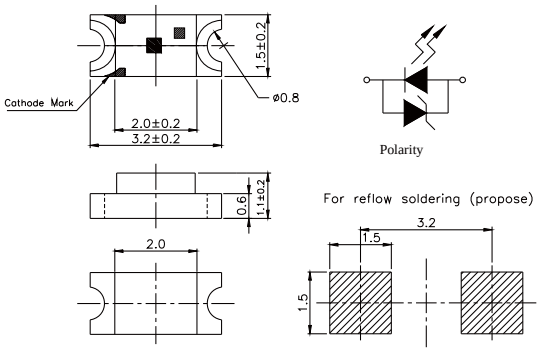

Product	Size (LxWxHmm)	Color	λ_d (nm)/CIE(x,y)	I_V Min./Typ. (mcd)	I_V Max. (mcd)	V_F Min./Typ. (V)	V_F Max. (V)	I_F (mA)
15-11/BHC-AN1P2/2T	3.2x1.5x1.0	Blue	470	28.5	72	2.7 / 3.3	3.7	20
15-11/BHC-ZL2N1QY/2T	3.2x1.5x1.0	Blue	470	14.5	36	2.7	3.2	5

SMD LED ▌Surface Mount Chip LED (PCB) ▌Top View 1206

UNIT : mm

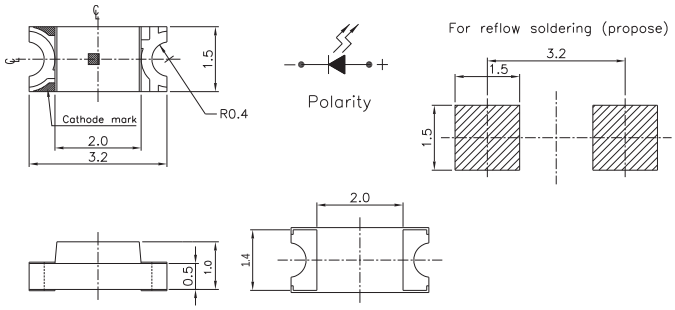

Product	Size (LxWxHmm)	Color	λ_d (nm)/CIE(x,y)	I_V Min./Typ. (mcd)	I_V Max. (mcd)	V_F Min./Typ. (V)	V_F Max. (V)	I_F (mA)
15-21/B6C-YR1S2B2/2T	3.2x1.5x1.0	Blue	470	112	285	2.9	3.6	20
15-21/B6C-ZQ1R1N/2T	3.2x1.5x1.0	Blue	470	72	140	2.7	3.7	20
15-21/BHC-AN1P2/2T	3.2x1.5x1.0	Blue	470	28.5	72	2.7 / 3.3	3.7	20
15-21/G6C-BK1L2VY/2T	3.2x1.5x1.0	Brilliant Yellow Green	573	7.2	18	1.7	2.2	5
15-21/G6C-FM1N2B/2T	3.2x1.5x1.0	Brilliant Yellow Green	573	18	45	1.75	2.35	20
15-21/G6C-FP1Q1L/2T	3.2x1.5x1.0	Brilliant Yellow Green	573	45	90	1.7	2.3	20
15-21/GHC-R2S2/2T	3.2x1.5x1.0	Brilliant Green	525	140	285	2.7 / 3.3	3.7	20
15-21/GHC-YR1S1/2T	3.2x1.5x1.0	Brilliant Green	525	112	225	3.5	3.7	20
15-21/R6C-AN1P2/2T	3.2x1.5x1.0	Brilliant Red	624	28.5	72	1.7 / 2	2.4	20
15-21/R6C-FQ1R1B/2T	3.2x1.5x1.0	Brilliant Red	624	72	140	1.75	2.35	20
15-21/S2C-AL2M2VY/2T	3.2x1.5x1.0	Brilliant Orange	605	14.5	28.5	1.7	2.2	5
15-21/S2C-AQ2R2B/2T	3.2x1.5x1.0	Brilliant Orange	605	90	180	1.75	2.35	20
15-21/S3C-AP1Q2/2T	3.2x1.5x1.0	Reddish Orange	615	45	112	1.7 / 2.0	2.4	20
15-21/T1D-CP1Q2TY/2T	3.2x1.5x1.0	Pure White	x=0.274, y=0.226	45	112	2.6	3	5
15-21/T7D-JQ2S1PY/2T	3.2x1.5x1.0	Pure White	x=0.274, y=0.226	90	225	2.7	3.3	5
15-21/Y2C-AN1P2/2T	3.2x1.5x1.0	Brilliant Yellow	589	28.5	72	1.7 / 2	2.4	20
15-21/Y2C-CP1Q2B/2T	3.2x1.5x1.0	Brilliant Yellow	589	45	112	1.75	2.35	20

UNIT : mm

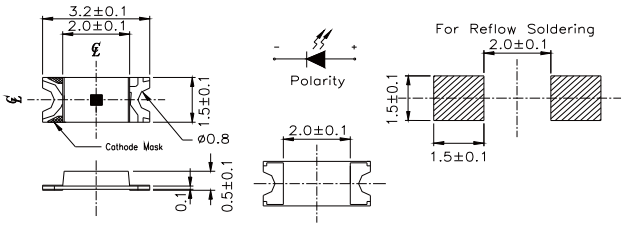

Product	Size (LxWxHmm)	Color	λ_d (nm)/CIE(x,y)	I_V Min./Typ. (mcd)	I_V Max. (mcd)	V_F Min./Typ. (V)	V_F Max. (V)	I_F (mA)
15-215/G7C-BN1P2B/2T	3.2x1.5x0.5	Brilliant Yellow Green	573	28.5	72	1.75	2.35	20
15-215/R6C-AM2P1VY/2T	3.2x1.5x0.5	Brilliant Red	624	22.5	57	1.7	2.2	5
15-215/R6C-AP1Q1L/2T	3.2x1.5x0.5	Brilliant Red	624	45	90	1.7	2.3	20

SMD LED ▌Surface Mount Chip LED (PCB) ▌Top View Mono Color

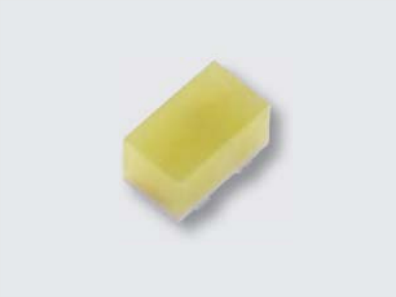

UNIT : mm

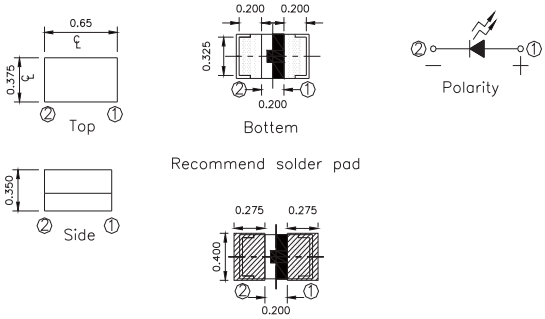

Product	Size (LxWxHmm)	Color	λ_d (nm)/CIE(x,y)	I_V Min./Typ. (mcd)	I_V Max. (mcd)	V_F Min./Typ. (V)	V_F Max. (V)	I_F (mA)
18-218/T1D-AN2Q1B3X/6T	0.65x0.375x0.35	○White	0.274,0.226	36	90	2.5	2.9	2

UNIT : mm

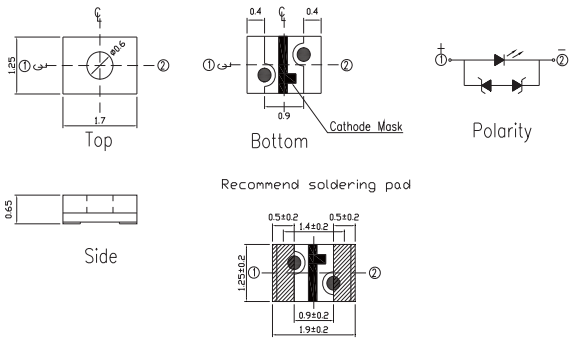

Product	Size (LxWxHmm)	Color	λ_d (nm)/ CIE(x,y)	I_V Min./Typ. (mcd)	I_V Max. (mcd)	V_F Min./Typ. (V)	V_F Max. (V)	I_F (mA)
63-119-BHD-ZM1N2TY-3T	1.7x1.25x0.65	●Blue	470	18	45	2.6	3	5
63-119-T1D-AN2Q1TY-3T	1.7x1.25x0.65	○White	0.274,0.226	36	90	2.6	3	5

SMD LED ▌Surface Mount Chip LED (PCB) ▌Top View Bi-Color

UNIT : mm

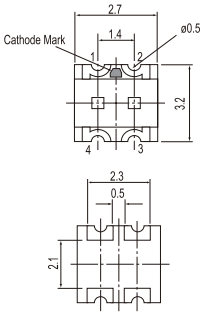

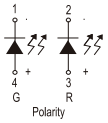

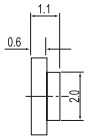

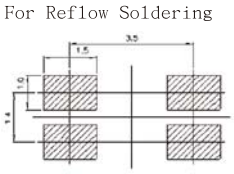

Product	Size (LxWxHmm)	Color	λ_d (nm)/ CIE(x,y)	I_V Min./Typ. (mcd)	I_V Max. (mcd)	V_F Min./Typ. (V)	V_F Max. (V)	I_F (mA)
15-22/R6G6C-A32/2T	3.2x2.7x1.1	Brilliant Red Brilliant Yellow Green	R6 : 624 G6 : 573	R6 : 28.5 G6 : 28.5	R6 : 72 G6 : 72	R6 : 1.7 / 2 G6 : 1.7 / 2	R6 : 2.4 G6 : 2.4	20
15-22/R6GHC-A01/2T	3.2x2.7x1.1	Brilliant Red Brilliant Green	R6 : 624 GH : 525	R6 : 90 / 130 GH : 112 / 165	--	R6 : 1.7 / 2 GH : 2.7 / 3.3	R6 : 2.4 GH : 3.7	20

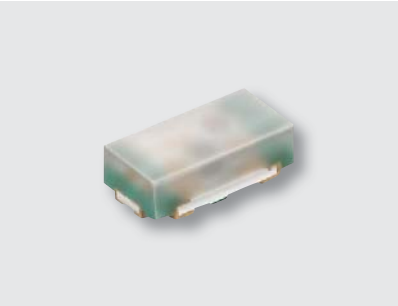

UNIT : mm

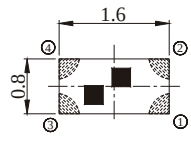

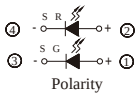

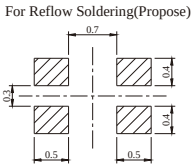

Product	Size (LxWxHmm)	Color	λ_d (nm)/ CIE(x,y)	I_V Min./Typ. (mcd)	I_V Max. (mcd)	V_F Min./Typ. (V)	V_F Max. (V)	I_F (mA)
18-225/B6R6C-C01/3T	1.6x0.8x0.5	Blue Brilliant Red	B6 : 470 R6 : 624	B6 : 18 / 28.5 R6 : 18 / 28.5	-	B6 : 2.7 / 3.3 R6 : 1.7 / 2.0	B6 : 3.7 R6 : 2.4	5
18-225/R6G6C-A01/3T	1.6x0.8x0.5	Brilliant Red Brilliant Yellow Green	R6 : 624 G6 : 573	R6 : 45 G6 : 28.5	R6 : 112 G6 : 72	R6 : 1.7 / 2 G6 : 1.7 / 2	R6 : 2.4 G6 : 2.4	20
18-225/S2G6C-A01/3T	1.6x0.8x0.5	Brilliant Orange Brilliant Yellow Green	S2 : 605 G6 : 573	S2 : 32 / 48 G6 : 16 / 24	-	S2 : 1.7 / 2 G6 : 1.7 / 2	S2 : 2.4 G6 : 2.4	20

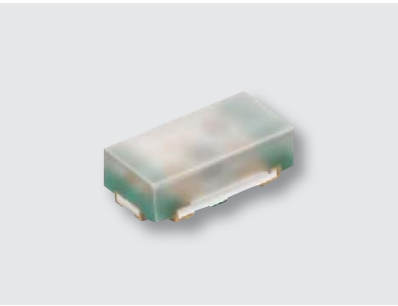

UNIT : mm

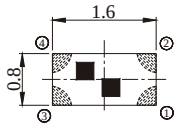

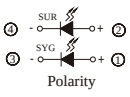

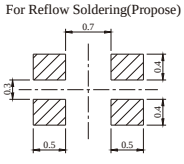

Product	Size (LxWxHmm)	Color	λ_d (nm)/ CIE(x,y)	I_V Min./Typ. (mcd)	I_V Max. (mcd)	V_F Min./Typ. (V)	V_F Max. (V)	I_F (mA)
18-225A/R6GHW-B01/3T	1.6x0.8x0.5	Brilliant Red Brilliant Green	R6 : 624 GH : 525	R6 : 28.5 GH : 72	R6 : 72 GH : 180	R6 : 1.7 / 2 GH : 2.7 / 3.3	R6 : 2.4 GH : 3.7	10

SMD LED ▌Surface Mount Chip LED (PCB) ▌Top View Bi-Color

UNIT : mm

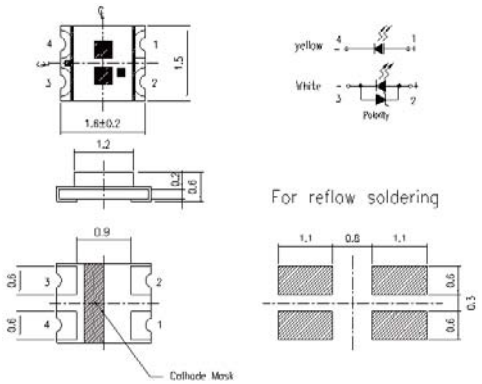

Product	Size (LxWxHmm)	Color	λ_d (nm)/CIE(x,y)	I_V Min./Typ. (mcd)	I_V Max. (mcd)	V_F Min./Typ. (V)	V_F Max. (V)	I_F (mA)
19-123/Y2ST1D-C30/2T	1.6x1.5x0.6	Brilliant Yellow Pure White	Y2S : 589 x=0.274, y=0.226	Y2S : 28.5 T1 : 45	Y2S : 72 T1 : 112	Y2S : 1.7 / 2 T1 : 2.7 / 3.3	Y2S : 2.4 T1 : 3.7	5

UNIT : mm

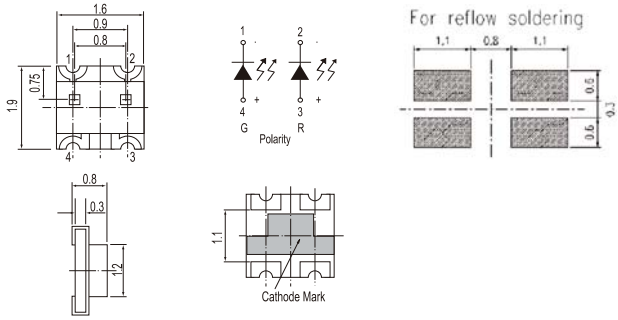

Product	Size (LxWxHmm)	Color	λ_d (nm)/ CIE(x,y)	I_V Min./Typ. (mcd)	I_V Max. (mcd)	V_F Min./Typ. (V)	V_F Max. (V)	I_F (mA)
19-22/G6R6C-A31/2T	1.9x1.6x0.8	Brilliant Yellow Green Brilliant Red	G6 : 573 R6 : 624	G6 : 22.5 R6 : 45	G6 : 57 R6 : 90	G6 : 1.7 / 2 R6 : 1.7 / 2	G6 : 2.4 R6 : 2.4	20
19-22/R6BHC-B01/2T	1.9x1.6x0.8	Brilliant Red Blue	R6 : 624 BH : 470	R6 : 14.5 / 20 BH : 14.5 / 20	--	R6 : 1.9 BH : 2.9	R6 : 2.3 BH : 3.3	10
19-22/R6G6C-A01/2T	1.9x1.6x0.8	Brilliant Red Brilliant Yellow Green	R6 : 624 G6 : 573	R6 : 45 G6 : 45	R6 : 72 G6 : 72	R6 : 1.7 / 2 G6 : 1.7 / 2	R6 : 2.4 G6 : 2.4	20
19-22/R6GHC-C02/2T	1.9x1.6x0.8	Brilliant Red Brilliant Green	R6 : 624 GH : 525	R6 : 14.5 / 20 GH : 45 / 65	--	R6 : 1.9 GH : 2.9	R6 : 2.3 GH : 3.4	5
19-22/Y2G6C-A14/2T	1.9x1.6x0.8	Brilliant Yellow Brilliant Yellow Green	Y2 : 589 G6 : 573	Y2 : 45 G6 : 28.5	Y2 : 112 G6 : 72	Y2 : 1.7 / 2 G6 : 1.7 / 2	Y2 : 2.4 G6 : 2.4	20

SMD LED ▌Surface Mount Chip LED (PCB) ▌Top View Bi-Color

UNIT : mm

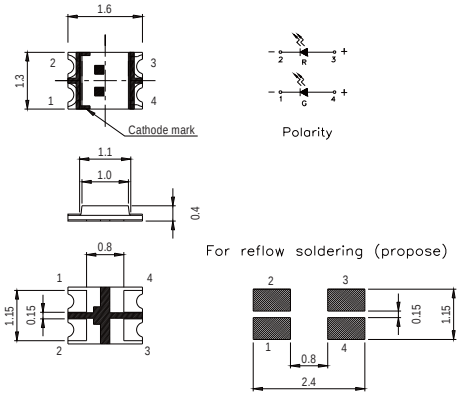

Product	Size (LxWxHmm)	Color	λ_d (nm)/ CIE(x,y)	I_V Min./Typ. (mcd)	I_V Max./Typ. (mcd)	V_F Min./Typ. (V)	V_F Max. (V)	I_F (mA)
19-226/R6BHC-B01/2T	1.6x1.3x0.4	Brilliant Red Blue	R6 : 624 BH : 470	R6 : 72 BH : 45	Tye. R6 : 100 BH : 80	R6 : 1.7 / 2 BH : 2.7 / 3.3	R6 : 2.4 BH : 3.7	10
19-226/R6G7C-B02/2T	1.6x1.3x0.4	Brilliant Red Brilliant Yellow Green	R6 : 624 G7 : 573	R6 : 22.5 G7 : 7.2	Max. R6 : 57 G7 : 18	R6 : 1.7 / 2 G7 : 1.7 / 2	R6 : 2.4 G7 : 2.4	10
19-226/R6GHC-A03/2T	1.6x1.3x0.4	Brilliant Red Brilliant Green	R6 : 624 GH : 525	R6 : 72 GH : 112	Max. R6 : 140 GH : 225	R6 : 1.7 / 2 GH : 2.7 / 3.3	R6 : 2.4 GH : 3.7	20

UNIT : mm

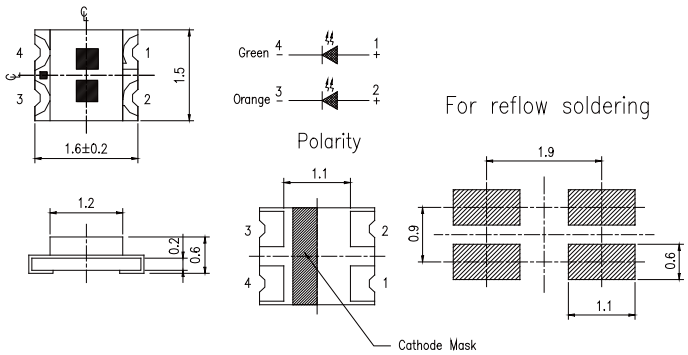

Product	Size (LxWxHmm)	Color	λ_d (nm)/CIE(x,y)	I_V Min./Typ. (mcd)	I_V Max. (mcd)	V_F Min./Typ. (V)	V_F Max. (V)	I_F (mA)
19-223/G6S2C-A01/2T	1.6x1.5x0.6	Brilliant Yellow Green Brilliant Orange	G6 : 573 S2 : 605	G6 : 30 S2 : 90	G6 : 60 S2 : 180	G6 : 2 S2 : 2	G6 : 2.4 S2 : 2.4	20
19-223/R6BHC-A05/2T	1.6x1.5x0.6	Brilliant Red Blue	R6 : 624 BH : 470	R6 : 72 BH : 36	R6 : 180 BH : 72	R6 : 1.7 / 2 BH : 2.7 / 3.3	R6 : 2.4 BH : 3.7	20
19-223/R6G6C-A01/2T	1.6x1.5x0.6	Brilliant Red Brilliant Yellow Green	R6 : 624 G6 : 573	R6 : 72 G6 : 22.5	R6 : 180 G6 : 57	R6 : 1.7 / 2 G6 : 1.7 / 2	R6: : 2.4 G6 : 2.4	20
19-223/R7BHC-A30/2T	1.6x1.5x0.6	Dark Red Blue	R7 : 631 BH : 470	R7 : 45 BH : 36	R7 : 112 BH : 90	R7 : 1.7 / 2 BH : 2.7 / 3.3	R7 : 2.4 BH : 2.7 / 3.7	20
19-223/R7G6C-A01/2T	1.6x1.5x0.6	Dark Red Brilliant Yellow Green	R7 : 631 G6 : 573	R7 : 18 G6 : 18	R7 : 72 G6 : 72	R7 : 2 G6 : 2	R7 : 2.4 G6 : 2.4	20
19-223/S2BHC-A01/2T	1.6x1.5x0.6	Brilliant Orange Blue	S2 : 605 BH : 470	S2 : 72 BH : 36	S2 : 140 BH : 72	S2 : 1.7 / 2 BH : 3	S2 : 2.4 BH : 3.5	20
19-223/S2T1D-C30/2T	1.6x1.5x0.6	Brilliant Orange Pure White	S2 : 605 x=0.274, y=0.226	S2 : 18 T1 : 45	S2 : 45 T1 : 112	S2 : 1.55 T1 : 2.7	S2 : 2.15 T1 : 3.3	5
19-223/Y2G6C-A01/2T	1.6x1.5x0.6	Brilliant Yellow Brilliant Yellow Green	Y2 : 589 G6 : 573	Y2 : 36 G6 : 28.5	Y2 : 72 G6 : 57	Y2 : 1.7 / 2 G6 : 1.7 / 2	Y2 : 2.4 G6 : 2.4	20

SMD LED ▌Surface Mount Chip LED (PCB) ▌Top View Full Color

UNIT : mm

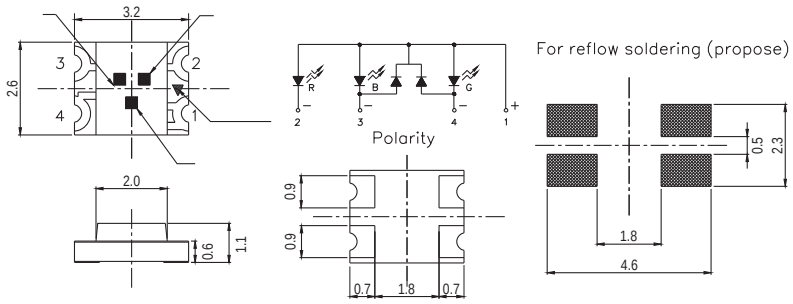

Product	Size (LxWxHmm)	Color	λ_d (nm)/ CIE(x,y)	I_V Min./Typ. (mcd)	I_V Max. (mcd)	V_F Min./Typ. (V)	V_F Max. (V)	I_F (mA)
15-13D/R6GHBHC-A01/2T	3.2x2.6x1.1	Brilliant Red Brilliant Green Blue	R6 : 624 GH : 525 BH : 470	R6 : 90 / 140 GH : 112 / 180 BH : 45 / 70	--	R6 : 1.7 / 2 GH : 2.7 / 3.3 BH : 2.7 / 3.3	R6 : 2.4 GH : 3.7 BH : 3.7	20

UNIT : mm

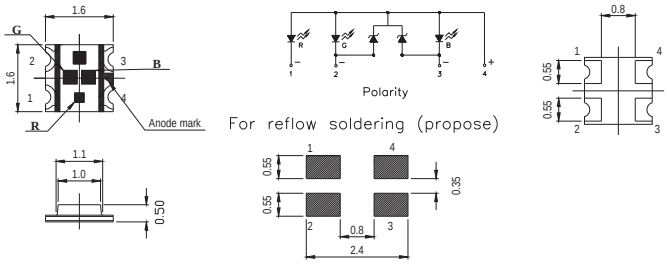

Product	Size (LxWxHmm)	Color	λ_d (nm)/ CIE(x,y)	I_V Min./Typ. (mcd)	I_V Max. (mcd)	V_F Min./Typ. (V)	V_F Max. (V)	I_F (mA)
19-137/R6GHBHC-A01/2T	1.6x1.6x0.5	Brilliant Red Brilliant Green Blue	R6 : 624 GH : 525 BH : 470	R6 : 72 / 100 GH : 112 / 180 BH : 28.5 / 50	--	R6 : 1.7 / 2 GH : 2.7 / 3.3 BH : 2.7 / 3.3	R6 : 2.4 GH : 3.7 BH : 3.7	20

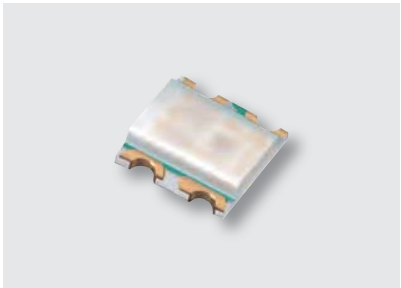

UNIT : mm

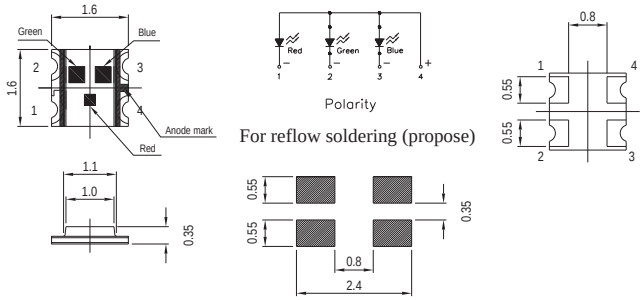

Product	Size (LxWxHmm)	Color	λ_d (nm)/ CIE(x,y)	I_V Min./Typ. (mcd)	I_V Max. (mcd)	V_F Min./Typ. (V)	V_F Max. (V)	I_F (mA)
19-237/R6GHBHC-A04/2T	1.6x1.6x0.35	Brilliant Red Brilliant Green Blue	R6 : 624 GH : 525 BH : 470	R6 : 18 / 30 GH : 28.5 / 60 BH : 11.5 / 18	--	R6 : 1.9 GH : 2.6 BH : 2.6	R6 : 2.2 GH : 3 BH : 3	20

SMD LED ▌Surface Mount Chip LED (PCB) ▌Top View Full Color

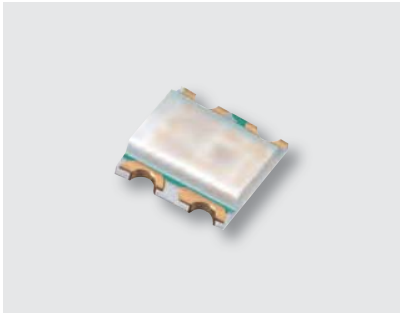

UNIT : mm

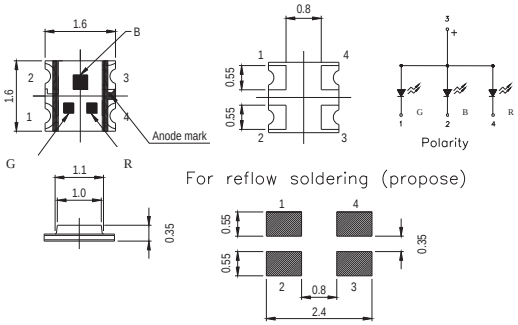

Product	Size (LxWxHmm)	Color	λ_d (nm)/ CIE(x,y)	I_V Min./Typ. (mcd)	I_V Max. (mcd)	V_F Min./Typ. (V)	V_F Max. (V)	I_F (mA)
19-237A/BHR6GHC-A01/2T	1.6x1.6x0.35	● Blue ● Brilliant Red ● Brilliant Green	BH : 470 R6 : 624 GH : 525	BH : 28.5 / 50 R6 : 72 / 100 GH : 112 / 180	-	BH : 3.3 R6 : 2 GH : 3.3	BH : 3.9 R6 : 2.4 GH : 3.9	20

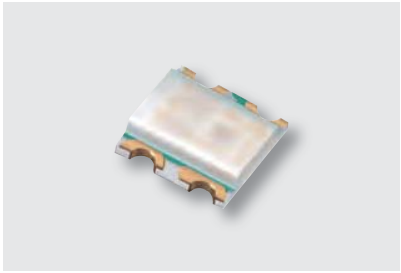

UNIT : mm

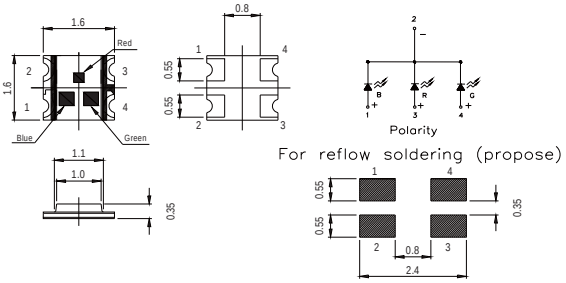

Product	Size (LxWxHmm)	Color	λ_d (nm)/ CIE(x,y)	I_V Min./Typ. (mcd)	I_V Max. (mcd)	V_F Min./Typ. (V)	V_F Max. (V)	I_F (mA)
19-237B/R6GHBHC-C01/2T	1.6x1.6x0.35	● Brilliant Red ● Brilliant Green ● Blue	R6 : 624 GH : 525 BH : 470	R6 : 18 / 30 GH : 28.5 / 60 BH : 11.5 / 18	R6 : 57 GH : 112 BH : 28.5	R6 : 1.7 / 2 GH : 2.6 / 3 BH : 2.6 / 3	R6 : 2.2 GH : 3.3 BH : 3.3	5

UNIT : mm

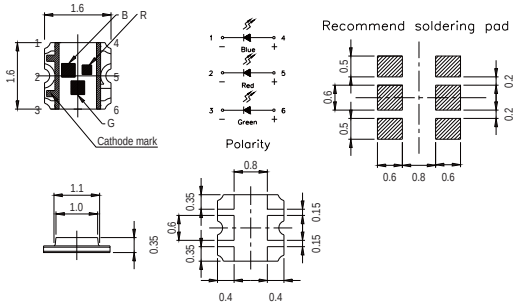

Product	Size (LxWxHmm)	Color	λ_d (nm)/ CIE(x,y)	I_V Min./Typ. (mcd)	I_V Max. (mcd)	V_F Min./Typ. (V)	V_F Max. (V)	I_F (mA)
19-337/R6GHBHC-A01/2T	1.6x1.6x0.35	● Brilliant Red ● Brilliant Green ● Blue	R6 : 624 GH : 525 BH : 470	R6 : 72 / 100 GH : 140 / 180 BH : 36 / 50	--	R6 : 2.0 GH : 3.3 BH : 3.3	R6 : 2.4 GH : 3.9 BH : 3.9	20

SMD LED ▌Surface Mount Chip LED (PCB) ▌Side View (0.2T~1.0T)

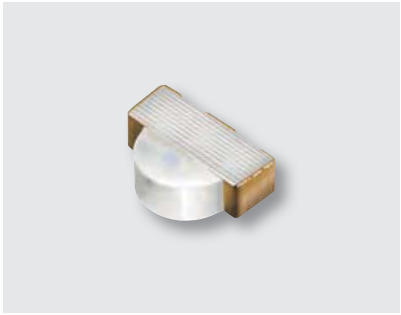

UNIT : mm

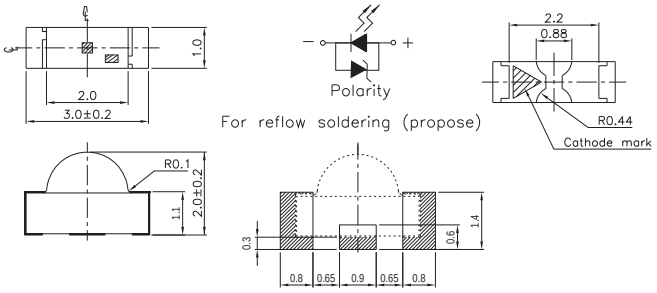

Product	Size (LxWxHmm)	Color	λ_d (nm)/CIE(x,y)	I_V Min./Typ. (mcd)	I_V Max. (mcd)	V_F Min./Typ. (V)	V_F Max. (V)	I_F (mA)
12-11/BHC-ZL1M2QY/2C	3x2x1	● Blue	470	11.5	28.5	2.7	3.2	5

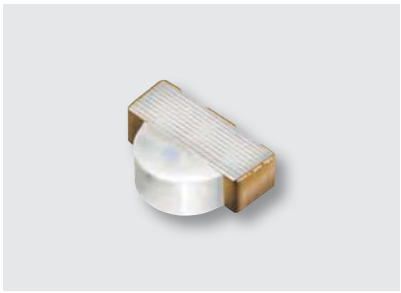

UNIT : mm

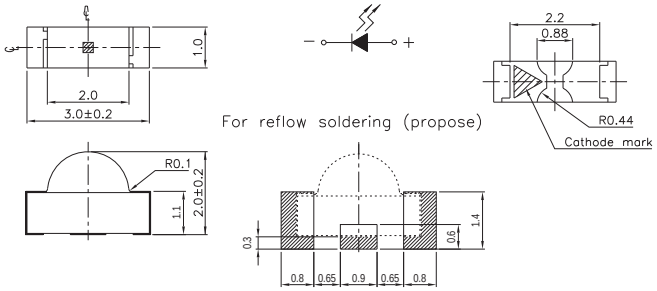

Product	Size (LxWxHmm)	Color	λ_d (nm)/CIE(x,y)	I_V Min./Typ. (mcd)	I_V Max. (mcd)	V_F Min./Typ. (V)	V_F Max. (V)	I_F (mA)
12-21/BHC-AN1P2/2C	3x2x1	● Blue	470	28.5	72	2.7 / 3.3	3.7	20
12-21/BHC-ZL1M2RY/2C	3x2x1	● Blue	470	11.5	28.5	2.5	3.1	5
12-21/GHC-YR2S2/2C	3x2x1	● Brilliant Green	525	140	285	3.5	4.3	20
12-21/R8C-AN1P2B/2D	3x2x1	● Deep Red	639	28.5	72	1.75	2.35	20
12-21/T3D-AQ2S2M/2C	3x2x1	○ Pure White	x=0.274, y=0.226	90	285	2.75	3.95	20

UNIT : mm

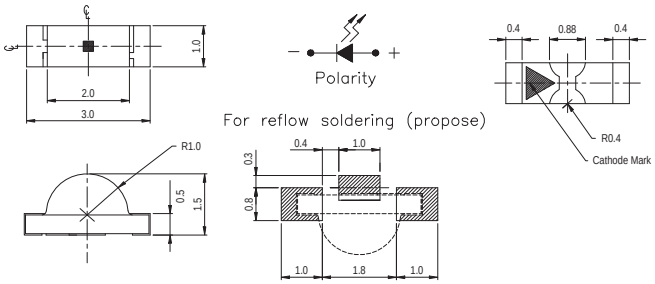

Product	Size (LxWxH mm)	Color	λ_d (nm)/CIE(x,y)	I_V Min./Typ. (mcd)	I_V Max. (mcd)	V_F Min./Typ. (V)	V_F Max. (V)	I_F (mA)
12-21C/BHC-AN1P2/2C	3x1.5x1	● Blue	470	28.5	72	2.7 / 3.3	3.7	20
12-21C/BHC-YL1M2HY/2C	3x1.5x1	● Blue	470	11.5	28.5	2.7	3.15	5
12-21C/T3D-CP1Q2B12Y/2C	3x1.5x1	○ Pure White	x=0.274, y=0.226	45	112	2.7	3.4	5

SMD LED ▌Surface Mount Chip LED (PCB) ▌Side View (0.2T~1.0T)

UNIT : mm

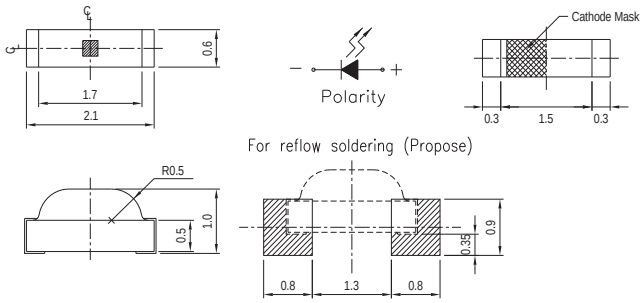

Product	Size (LxWxHmm)	Color	λ_d (nm)/CIE(x,y)	I_V Min./Typ. (mcd)	I_V Max. (mcd)	V_F Min./ Typ. (V)	V_F Max. (V)	I_F (mA)
12-215/BHC-AN1P2/3C	2.1x1x0.6	Blue	470	28.5	72	3.5	4	20
12-215/BHC-XL1M2HY/3C	2.1x1x0.6	Blue	470	11.5	28.5	2.7	3.15	5
12-215/G6C-AL2M2B/3C	2.1x1x0.6	Brilliant Yellow Green	573	14.5	28.5	1.75	2.35	20
12-215/G6C-BP1Q2L/3C	2.1x1x0.6	Brilliant Yellow Green	573	45	112	1.7	2.3	20
12-215/R6C-AR1S1B/3C	2.1x1x0.6	Brilliant Red	624	112	225	1.75	2.35	20
12-215/T1D-ANPHY/3C	2.1x1x0.6	Pure White	x=0.274, y=0.226	28.5	72	2.7	3.15	5
12-215/Y2C-BR1S1L/3C	2.1x1x0.6	Brilliant Yellow	589	112	225	1.7	2.3	20
12-215/Y2C-CP1Q2B/3C	2.1x1x0.6	Brilliant Yellow	589	45	112	1.75	2.35	20
12-215/Y2C-CQ1R1B/3C	2.1x1x0.6	Brilliant Yellow	589	72	140	1.75	2.35	20

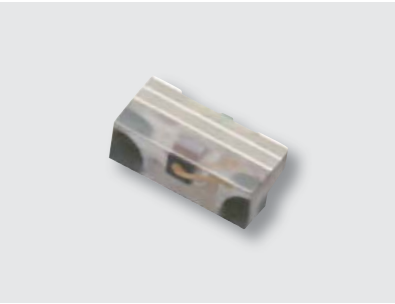

UNIT : mm

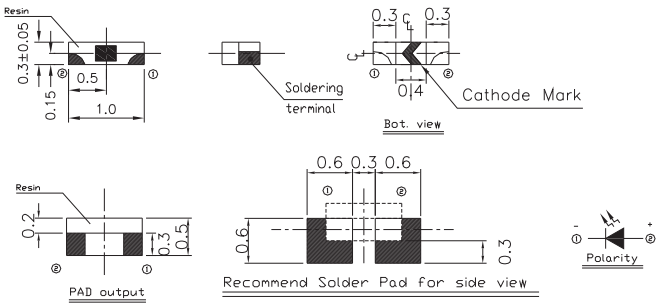

Product	Size (LxWxHmm)	Color	λ_d (nm)/CIE(x,y)	I_V Min./Typ. (mcd)	I_V Max. (mcd)	V_F Min./Typ. (V)	V_F Max. (V)	I_F (mA)
16-916/T1D-AP1Q2QY/3T	1x0.5x0.3	Pure White	x=0.274, y=0.226	45	112	2.7	3.2	5

SMD LED ▌Surface Mount Chip LED (PCB) ▌Side View (0.2T~1.0T)

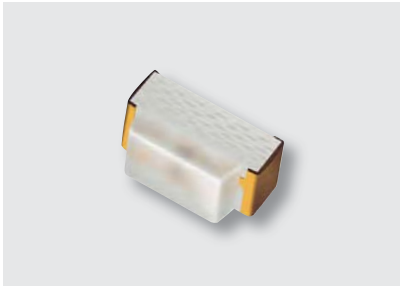

UNIT : mm

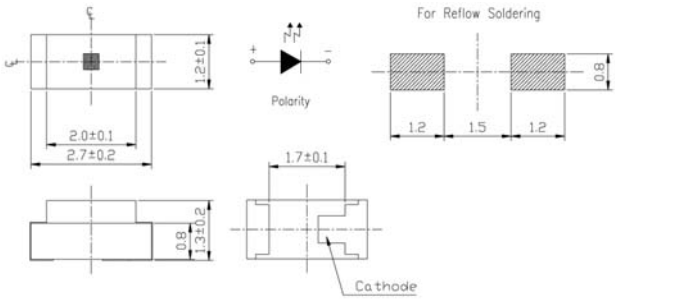

Product	Size (LxWxH mm)	Color	λ_d (nm)/CIE(x,y)	I_V Min./Typ. (mcd)	I_V Max. (mcd)	V_F Min./Typ. (V)	V_F Max. (V)	I_F (mA)
22-21/BHC-AN1P2/2C	2.7x1.3x1.2	Blue	470	28.5	72	3.8	4.5	20
22-21/GHC-YR1S2/2C	2.7x1.3x1.2	Brilliant Green	525	112	285	2.7 / 3.3	3.7	20

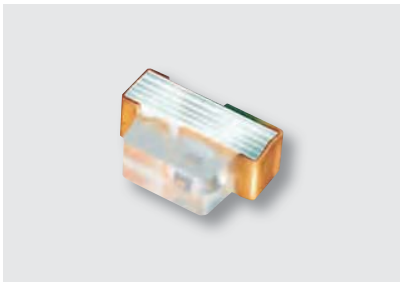

UNIT : mm

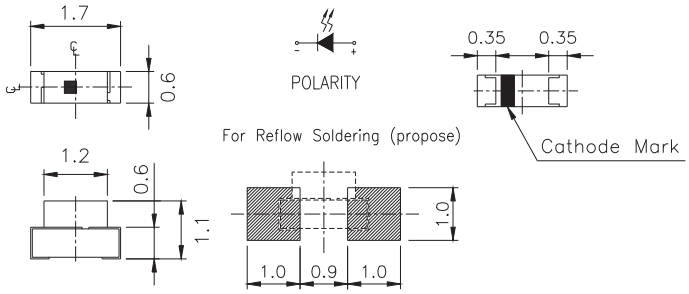

Product	Size (LxWxH mm)	Color	λ_d (nm)/CIE(x,y)	I_V Min./Typ. (mcd)	I_V Max. (mcd)	V_F Min./Typ. (V)	V_F Max. (V)	I_F (mA)
27-21/BHC-AN1P2/3C	1.7x1.1x0.6	Blue	470	28.5	72	2.7 / 3.3	3.7	20
27-21/BHC-AP1Q2/3C	1.7x1.1x0.6	Blue	470	45	112	2.7 / 3.3	3.7	20
27-21/GHC-YR1S2M/3C	1.7x1.1x0.6	Brilliant Green	525	112	285	2.75	3.95	20
27-21/R6C-AP1Q2B/3C	1.7x1.1x0.6	Brilliant Red	624	45	112	1.75	2.35	20
27-21/T1D-ANPHY/3C	1.7x1.1x0.6	Pure White	x=0.274, y=0.226	28.5	72	2.7	3.15	5
27-21/T1D-CQ1R2NW/3C	1.7x1.1x0.6	Pure White	x=0.274, y=0.226	72	180	2.7	3.7	15
27-21/T3D-AP2Q2HY/3C	1.7x1.1x0.6	Pure White	x=0.274, y=0.226	57	112	2.7	3.15	5
27-21/Y2C-CPQB/3D	1.7x1.1x0.6	Brilliant Yellow	589	45	112	1.75	2.35	20

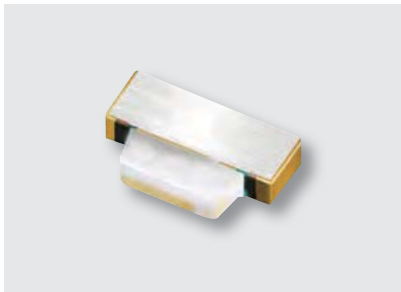

UNIT : mm

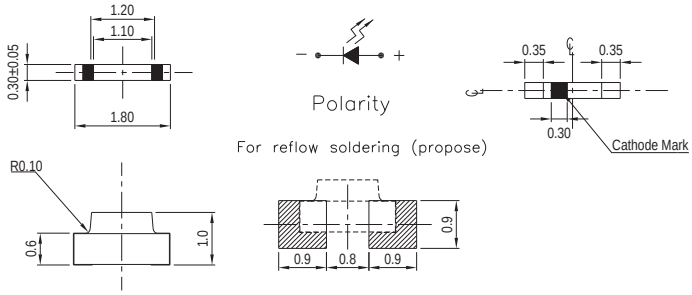

Product	Size (LxWxHmm)	Color	λ_d (nm)/CIE(x,y)	I_V Min./Typ. (mcd)	I_V Max. (mcd)	V_F Min./Typ. (V)	V_F Max. (V)	I_F (mA)
48-213/BHC-ZM2P1QY/3C	1.8x1.0x0.3	Blue	470	22.5	57	2.7	3.2	5
48-213/R6C-AM1N2VY/3C	1.8x1.0x0.3	Brilliant Red	624	18	45	1.7	2.2	5
48-213/T2D-AQ2R2QY/3C	1.8x1.0x0.3	Pure White	x=0.274, y=0.226	90	180	2.7	3.2	5
48-213/T3D-AP1Q2TY/3C	1.8x1.0x0.3	Pure White	x=0.274, y=0.226	45	112	2.6	3	5
48-213/T7D-AQ1R2QY/3C	1.8x1.0x0.3	Pure White	x=0.274, y=0.226	72	180	2.7	3.2	5

SMD LED ▌Surface Mount Chip LED (PCB) ▌Side View Bi-Color

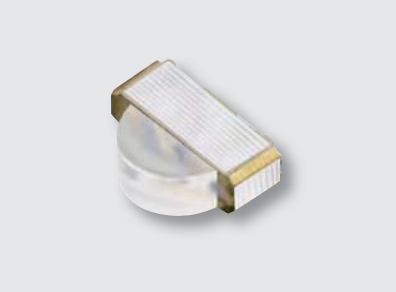

UNIT : mm

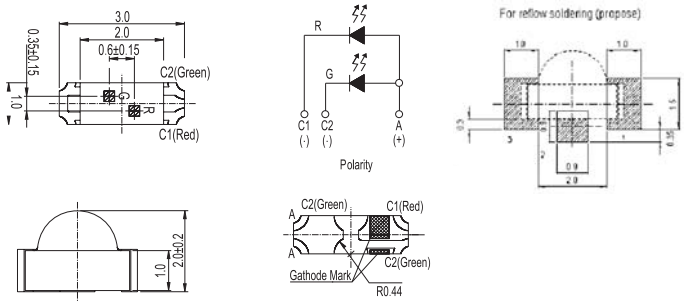

Product	Size (LxWxHmm)	Color	λ_d (nm)/ CIE(x,y)	I_v Min./Typ. (mcd)	I_v Max. (mcd)	V_F Min./Typ. (V)	V_F Max. (V)	I_F (mA)
12-22/BHR6C-A01/2C	3.0x2.0x1.0	Blue Brilliant Red	BH : 470 R6 : 624	BH : 18 / 28 R6 : 22.5 / 30	--	BH : 2.7 R6 : 1.7	BH : 3.1 R6 : 2.2	20
12-22/G6R8C-A30/2C	3.0x2.0x1.0	Brilliant Yellow Green Deep Red	G6 : 573 R8 : 639	G6 : 28.5 R8 : 28.5	G6 : 72 R8 : 72	G6 : 1.7 / 2 R8 : 1.7 / 2	G6 : 2.4 R8 : 2.4	20
12-22/R6GHC-A30/2C	3.0x2.0x1.0	Brilliant Red Brilliant Green	R6 : 624 GH : 525	R6 : 72 GH : 112	R6 : 180 GH : 285	R6 : 1.7 / 2 GH : 2.7 / 3.3	R6 : 2.4 GH : 3.7	20
12-22/Y2G6C-A30/2C	3.0x2.0x1.0	Brilliant Yellow Brilliant Yellow Green	Y2 : 589 G6 : 573	Y2 : 45 G6 : 28.5	Y2 : 112 G6 : 72	Y2 : 1.7 / 2 G6 : 1.7 / 2	Y2 : 2.4 G6 : 2.4	20

UNIT : mm

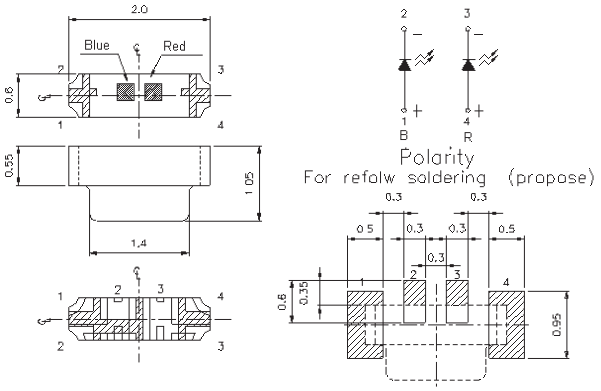

Product	Size (LxWxHmm)	Color	λ_d (nm)/ CIE(x,y)	I_v Min./Typ. (mcd)	I_v Max. (mcd)	V_F Min./Typ. (V)	V_F Max. (V)	I_F (mA)
17-223/BHR7C-C30/3C	2.0x1.05x0.6	Blue Dark Red	BH : 470 R7 : 631	BH : 22.5 R7 : 14.5	BH : 57 R7 : 36	BH : 2.7 R7 : 1.55	BH : 3.2 R7 : 2.15	5

SMD LED ▌Surface Mount Chip LED (PCB) ▌Side View Full Color

UNIT : mm

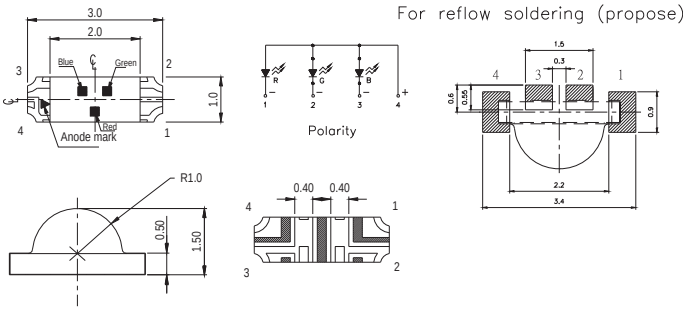

Product	Size (LxWxHmm)	Color	λ_d (nm)/ CIE(x,y)	I_V Min./Typ. (mcd)	I_V Max. (mcd)	V_F Min./Typ. (V)	V_F Max. (V)	I_F (mA)
12-23C/R6GHBHC-A01/2C	3.0x1.5x1.0	Brilliant Red Brilliant Green Blue	R6 : 624 GH : 525 BH : 470	R6 : 63 / 90 GH : 125 / 180 BH : 32 / 50	--	R6 : 2 GH : 3.3 BH : 3.3	R6 : 2.4 GH : 3.9 BH : 3.9	20
12-23C/S2GHBHC-A01/2C	3.0x1.5x1.0	Brilliant Orange Brilliant Green Blue	BH : 470 GH : 525 S2 : 605	BH : 36 / 65 GH : 140 / 210 S2 : 72 / 140	--	BH : 3.3 GH : 3.3 S2 : 2	BH : 3.9 GH : 3.9 S2 : 2.4	20

UNIT : mm

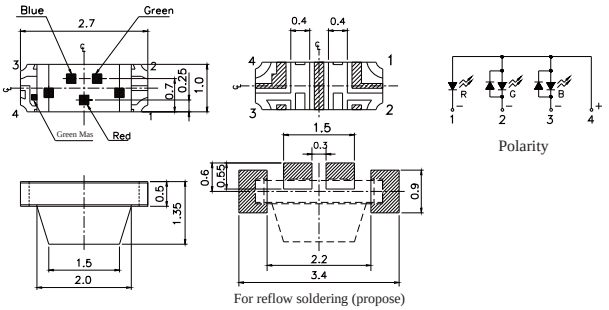

Product	Size (LxWxHmm)	Color	λ_d (nm)/ CIE(x,y)	I_V Min./Typ. (mcd)	I_V Max. (mcd)	V_F Min./Typ. (V)	V_F Max. (V)	I_F (mA)
22-23/R6GHBHC-A01/2C	2.7x1.35x1.0	Brilliant Red Brilliant Green Blue	R6 : 624 GH : 525 BH : 470	R6 : 45 / 180 GH : 112 / 450 BH : 28.5 / 112	--	R6 : 1.7 / 2 GH : 2.7 / 3.3 BH : 2.7 / 3.3	R6 : 2.4 GH : 3.7 BH : 3.7	20

UNIT : mm

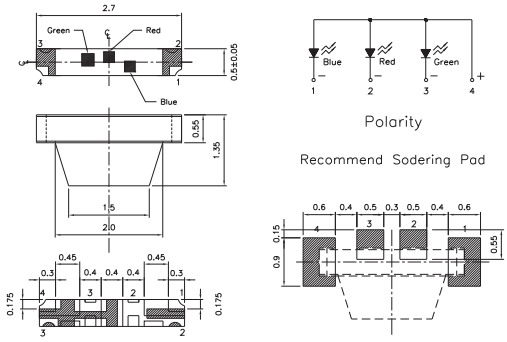

Product	Size (LxWxHmm)	Color	λ_d (nm)/ CIE(x,y)	I_V Min./Typ. (mcd)	I_V Max. (mcd)	V_F Min./Typ. (V)	V_F Max. (V)	I_F (mA)
22-23C/R6GHBHW-C01/2C	2.7x1.35x0.5	Brilliant Red Brilliant Green Blue	R6 : 624 GH : 525 BH : 470	R6 : 14.5 GH : 35 BH : 10	R6 : 36 GH : 110 BH : 24.5	R6 : 1.7 / 1.85 GH : 2.7 / 2.9 BH : 2.7 / 2.9	R6 : 2 GH : 3.2 BH : 3.1	5

SMD LED ▌Surface Mount Chip LED (PCB) ▌Reverse Mount

UNIT : mm

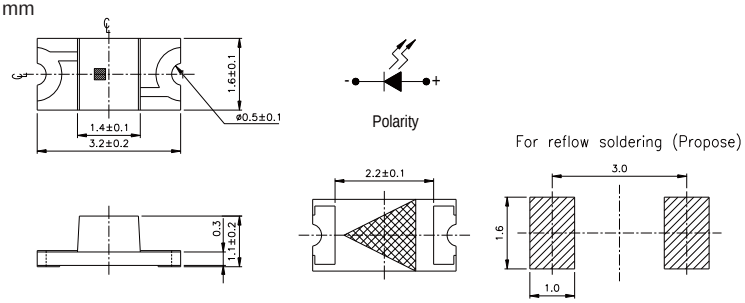

Product	Size (LxWxHmm)	Color	λ_d (nm)/ CIE(x,y)	I_V Min./Typ. (mcd)	I_V Max. (mcd)	V_F Min./Typ. (V)	V_F Max. (V)	I_F (mA)
23-21/G6C-AL2N1/2T	3.2x1.6x1.1	Brilliant Yellow Green	573	14.5	36	1.7 / 2	2.4	20
23-21/GHC-YR2T1/2A	3.2x1.6x1.1	Brilliant Green	525	140	360	3.5	3.9	20
23-21/R6C-AM1N2AY/2A	3.2x1.6x1.1	Brilliant Red	624	18	45	1.55	2.15	5
23-21/R8C-AN2Q1B/2T	3.2x1.6x1.1	Deep Red	639	36	90	1.75	2.35	20

UNIT : mm

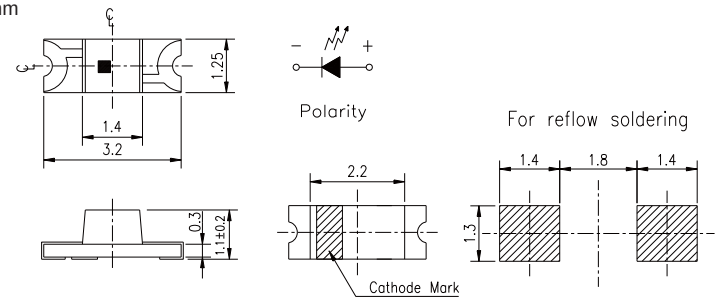

Product	Size (LxWxHmm)	Color	λ_d (nm)/CIE(x,y)	I_V Min./Typ. (mcd)	I_V Max. (mcd)	V_F Min./Typ. (V)	V_F Max. (V)	I_F (mA)
23-21B/BHC-AN1P2/2A	3.2x1.25x1.1	Blue	470	28.5	72	3.5	4	20
23-21B/BHC-ZM1N2TY/2A	3.2x1.25x1.1	Blue	470	18	45	2.6	3	5
23-21B/G6C-AM2P1/2A	3.2x1.25x1.1	Brilliant Yellow Green	573	22.5	57	1.7 / 2	2.4	20
23-21B/S2C-AP1Q2B/2A	3.2x1.25x1.1	Brilliant Orange	605	45	112	1.75	2.35	20
23-21B/T1D-ANQHY/2A	3.2x1.25x1.1	Pure White	x=0.274, y=0.226	28.5	112	2.7	3.15	5
23-21B/T1D-CP2Q2TY/2A	3.2x1.25x1.1	Pure White	x=0.274, y=0.226	57	112	2.6	3	5
23-21B/W1D-ANQHY/2A	3.2x1.25x1.1	Pure White	x=0.274, y=0.226	28.5	112	2.7	3.15	5

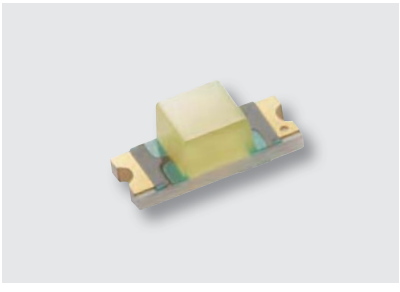

UNIT : mm

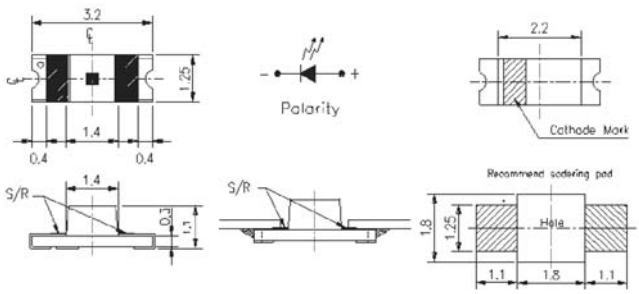

Product	Size (LxWxHmm)	Color	λ_d (nm)/CIE(x,y)	I_V Min./Typ. (mcd)	I_V Max. (mcd)	V_F Min./Typ. (V)	V_F Max. (V)	I_F (mA)
23-21C/T1D-CP2Q2TY/2A	3.2x1.25x1.1	White	x=0.274, y=0.226	57	112	Min. 2.6	3	5

SMD LED ▌Surface Mount Chip LED (PCB) ▌Reverse Mount

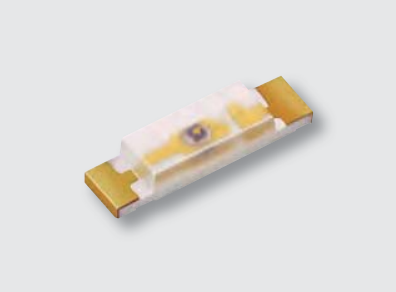

UNIT : mm

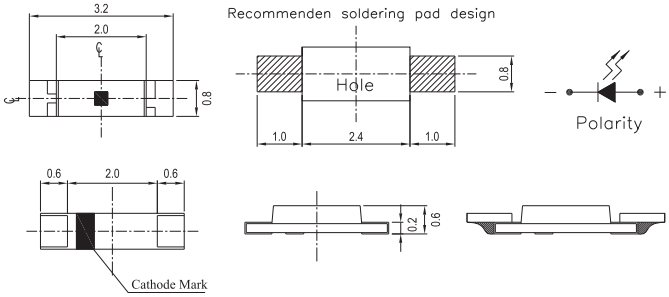

Product	Size (LxWxHmm)	Color	λ_d (nm)/CIE(x,y)	I_V Min./Typ. (mcd)	I_V Max. (mcd)	V_F Min./Typ. (V)	V_F Max. (V)	I_F (mA)
23-215A/BHC-DN2P2E/5A	3.2x0.8x0.6	Blue	470	36	72	2.75	3.65	20

UNIT : mm

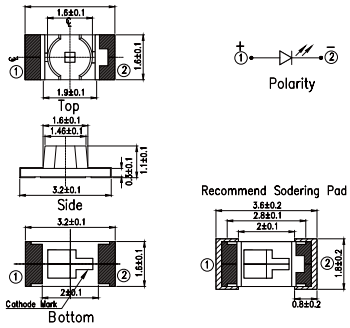

Product	Size (LxWxHmm)	Color	λ_d (nm)/ CIE(x,y)	I_V Min./Typ. (mcd)	I_V Max. (mcd)	V_F Min./Typ. (V)	V_F Max. (V)	I_F (mA)
24-21/BHC-AN1P2/2A	3.2x1.6x1.1	Blue	470	28.5	72	2.7/3.3	3.7	20
24-21/GHC-YR2T1/2A	3.2x1.6x1.1	Brilliant Green	525	140	360	3.5	4	20

SMD LED ▌Surface Mount Chip LED (PCB) ▌Reverse Mount Bi-color

UNIT : mm

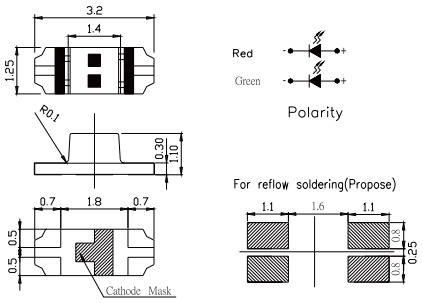

Product	Size (LxWxHmm)	Color	λ_d (nm)/ CIE(x,y)	I_V Min./Typ. (mcd)	I_V Max. (mcd)	V_F Min./Typ. (V)	V_F Max. (V)	I_F (mA)
23-22B/R7G6C-A30/2T	3.2x1.25x1.1	Dark Red Brilliant Yellow Green	R7 : 631 G6 : 573	R7 : 18 G6 : 14.5	R7 : 72 G6 : 45	R7 : 1.7 / 2 G6 : 1.7 / 2	R7 : 2.4 G6 : 2.4	20
23-22B/S2BHC-C30/2A	3.2x1.25x1.1	Brilliant Orange Blue	S2 : 605 BH : 470	S2 : 11.5 BH : 11.5	S2 : 28.5 BH : 28.5	S2 : 1.55 / 1.85 BH : 2.5 / 3.1	S2 : 2.25 BH : 3.5	5

UNIT : mm

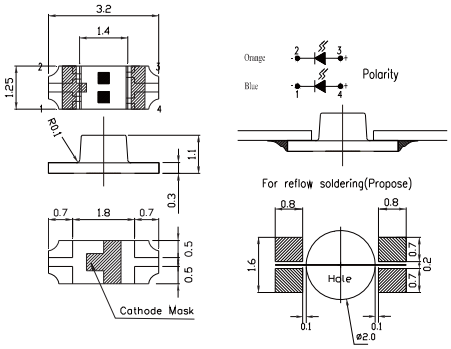

Product	Size (LxWxHmm)	Color	λ_d (nm)/ CIE(x,y)	I_V Min./Typ. (mcd)	I_V Max. (mcd)	V_F Min./Typ. (V)	V_F Max. (V)	I_F (mA)
23-22C/S2BHC-B30/2A	3.2x1.25x1.1	Brilliant Orange Blue	S2 : 605 BH : 470	S2 : 22.5 BH : 22.5	S2 : 57 BH : 57	S2 : 1.7 / 2 BH : 2.7 / 3.3	S2 : 2.4 BH : 3.7	10

SMD LED ▌Surface Mount Chip LED (PCB) ▌Reverse Mount Full color

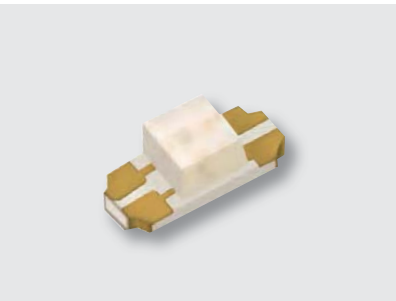

UNIT : mm

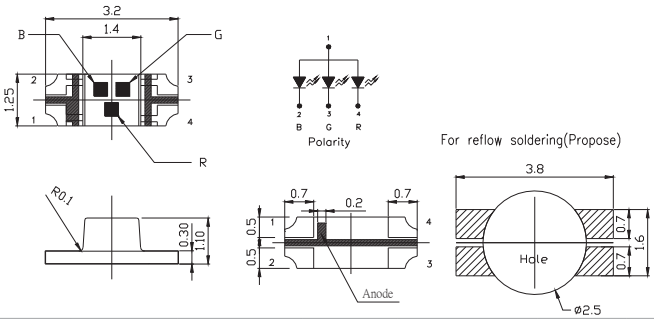

Product	Size (LxWxHmm)	Color	λ_d (nm)/ CIE(x,y)	I_V Min./Typ. (mcd)	I_V Max. (mcd)	V_F Min./Typ. (V)	V_F Max. (V)	I_F (mA)
23-23B/R6GHBHC-A01/2A	3.2x1.25x1.1	Brilliant Red Brilliant Green Blue	R6 : 624 GH : 525 BH : 470	R6 : 72 / 100 GH : 140 / 200 BH : 45 / 65	--	R6 : 1.7 / 2 GH : 2.7 / 3.3 BH : 2.7 / 3.3	R6 : 2.4 GH : 3.7 BH : 3.7	20

SMD LED ▌Surface Mount PLCC LEDs (Reflector) ▌Top View LED

UNIT : mm

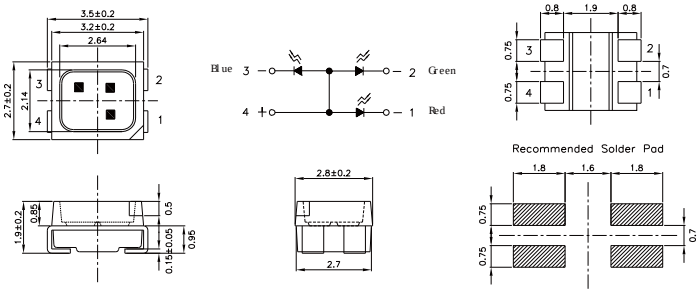

Product	Size (LxWxHmm)	Color	λ_d (nm)/ CIE(x,y)	I_V Min./Typ. (mcd)	I_V Max. (mcd)	V_F Min./ Typ. (V)	V_F Max. (V)	I_F (mA)
67-23/R6GHBHC-B05/2T	3.5x2.8x1.9	R6: Brilliant Red GH: Brilliant Green BH: Blue	R6 : 621~631 GH : 520~530 BH : 465~475	R6 : 112 GH : 180 BH : 72	R6 : 285 GH : 715 BH : 285	R6 : 2.0 GH : 3.4 BH : 3.4	R6 : 2.4 GH : 3.95 BH : 3.95	20
67-23SDRSYGUBC/TR8	3.5x2.8x1.9	SDR: Deep Red SYG: Brilliant Yellow Green UB: Blue	SDR : 639 SYG : 573 UB : 470	SDR : 63 / 112 SYG : 13 / 20 UB : 11 / 18	--	SDR : 2.0 SYG : 2.0 UB : 3.5	SDR : 2.4 SYG : 2.4 UB : 4.0	20

UNIT : mm

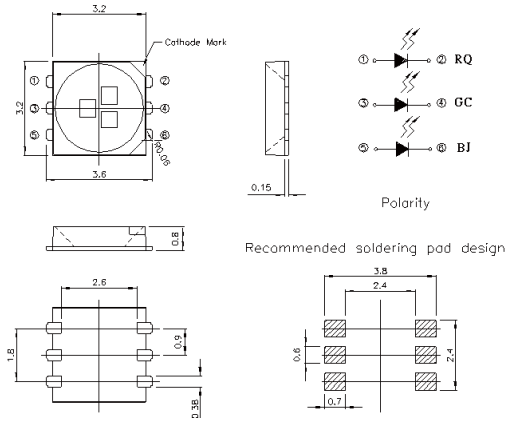

Product	Size (LxWxHmm)	Color	λ_d (nm)/CIE(x,y)	I_V Min./Typ. (mcd)	I_V Max. (mcd)	V_F Min./Typ. (V)	V_F Max. (V)	I_F (mA)
67-235-BJRQGCC-A01E-2T8-CS	3.2x3.2x0.8	BQ:Super-Red GC:Brilliant Green BJ:Blue	BQ:617.5-629.5 GC:525-535 BJ:465-475	BQ:450 GC:1120 BJ:225	BQ:900 GC:1800 BJ:450	BQ:1.75 GC:2.75 BJ:2.75	BQ:2.75 GC:3.65 BJ:3.65	20

SMD LED ▌Surface Mount PLCC LEDs (Reflector) ▌Top View Bi-Color

UNIT : mm

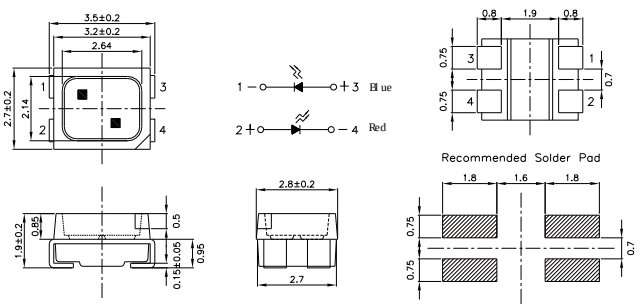

Product	Size (LxWxHmm)	Color	λ_d (nm)	I_V Min./Typ. (mcd)	I_V Max. (mcd)	V_F Min./Typ. (V)	V_F Max. (V)	I_F (mA)
67-22/G3G3C-B45/2T	3.5x2.8x1.9	G3: Pale Green G3: Pale Green	563.5~571.5	4.5 / 10	36	1.7 / 2.0	2.4	10
67-22/R6BHC-B07/2T	3.5x2.8x1.9	R6: Brilliant Red BH: Blue	R6 : 621~631 BH : 466.5~471.5	R6 : 90 BH : 90	R6 : 225 BH : 225	R6 : 1.75 BH : 2.9	R6 : 2.35 BH : 3.7	20
67-22/R6G6C-B09/2T	3.5x2.8x1.9	R6: Brilliant Red G6: Brilliant Yellow Green	R6 : 621~627 G6 : 570~574	R6 : 57 G6 : 36	R6 : 140 G6 : 90	R6 : 1.75 G6 : 1.75	R6 : 2.35 G6 : 2.35	20
67-22/R6Y2C-B31/2T	3.5x2.8x1.9	R6: Brilliant Red Y2: Brilliant Yellow	R6 : 621~631 Y2 : 586~594	R6 : 72 Y2 : 72	R6 : 285 Y2 : 285	1.75	2.35	20
67-22SURSYGC/ S530-A2/TR8	3.5x2.8x1.9	SUR: Brilliant Red SYG: Brilliant Yellow Green	SUR : 624 SYG : 573	SUR : 24 / 59 SYG : 16 / 24	--	SUR :1.7 / 2.0 SYG :1.7 / 2.0	SUR : 2.4 SYG : 2.4	20
67-22UYSYGC/ S530-A5/TR8	3.5x2.8x1.9	UY: Brilliant Yellow SYG: Brilliant Yellow Green	UY : 589 SYG : 573	UY : 80 / 120 SYG : 50 / 80	--	UY : 1.7/2.0 SYG : 1.7/2.0	UY : 2.4 SYG : 2.4	20

SMD LED ▌Surface Mount PLCC LEDs (Reflector) ▌Top View PLCC2

UNIT : mm

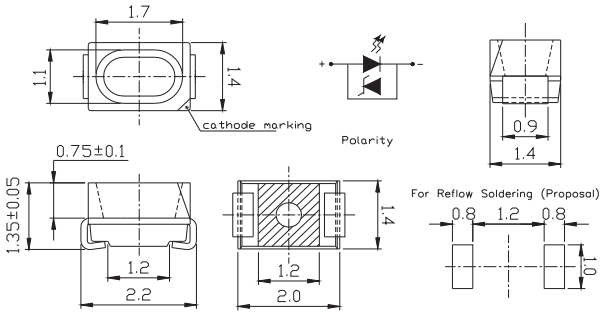

Product	Size (LxWxHmm)	Color	λ_d (nm)/CIE(x,y)	I_V Min./Typ. (mcd)	I_V Max. (mcd)	V_F Min./Typ. (V)	V_F Max. (V)	I_F (mA)
65-11/BHC-AR1S2B2/2T	2.2x1.4x1.35	Blue	464.5~476.5	112	285	2.9	3.6	20
65-11/T2C-FV1W2E/2T	2.2x1.4x1.35	Pure White	x=0.283~0.33 y=0.276~0.36	715	1800	2.75	3.65	20

UNIT : mm

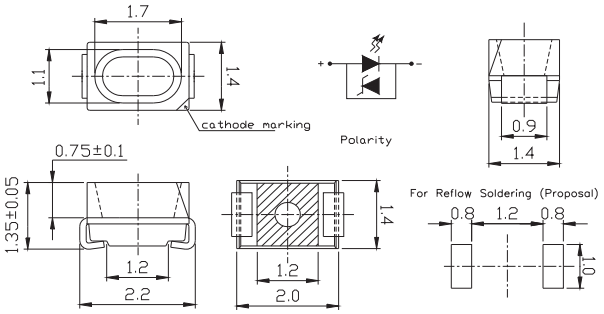

Product	Size (LxWxHmm)	Color	λ_d (nm)/CIE(x,y)	I_V Min./Typ. (mcd)	I_V Max. (mcd)	V_F Min./ Typ. (V)	V_F Max. (V)	I_F (mA)
65-21/G6C-AN2Q1/3T	2.2x1.4x1.35	Brilliant Yellow Green	569.5~577.5	36	90	1.75	2.35	20
65-21/Y2C-CJ2L2X/3T	2.2x1.4x1.35	Brilliant Yellow	586~592	5.8	18	2	2.4	2
65-21/Y2SC-AR1S2B/2T	2.2x1.4x1.35	Brilliant Yellow	585.5~594.5	112	285	1.75	2.35	20
65-21/Y2SC-FR2S1B/2T	2.2x1.4x1.35	Brilliant Yellow	586~594	140	225	1.75	2.35	20

UNIT : mm

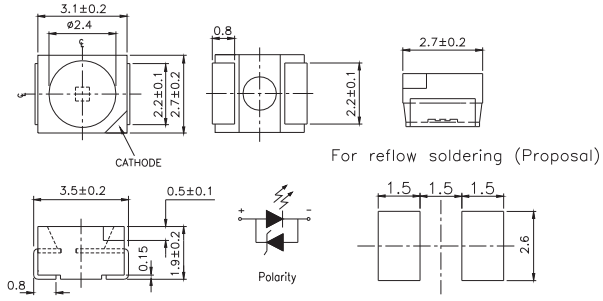

Product	Size (LxWxHmm)	Color	λ_d (nm)/CIE(x,y)	I_V Min./Typ. (mcd)	I_V Max. (mcd)	V_F Min./Typ. (V)	V_F Max. (V)	I_F (mA)
67-11/BHC-FQ2S1F/2T	3.5x2.7x1.9	Blue	464~472	90	285	2.7	3.5	20
67-11/W1C-ES1T2N/2T	3.5x2.7x1.9	Warm White	x=0.264~0.330 y=0.248~0.360	180	450	2.7	3.7	20
67-11/W1C-FV1W2F/2T	3.5x2.7x1.9	White	x=0.283~0.330 y=0.276~0.360	715	1800	2.7	3.5	20

SMD LED ▌Surface Mount PLCC LEDs (Reflector) ▌Top View PLCC2

UNIT : mm

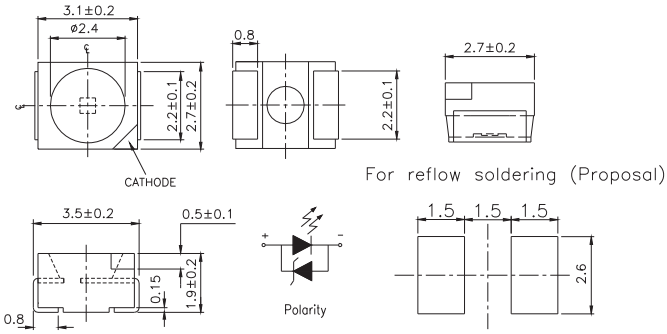

Product	Size (LxWxHmm)	Color	λ_d (nm)/CIE(x,y)	I_V Min./ Typ. (mcd)	I_V Max. (mcd)	V_F Min./ Typ. (V)	V_F Max. (V)	I_F (mA)
67-21/B3C-BN1Q2N/2T	3.5x2.7x1.9	Blue	464.5~473.5	28.5	112	2.7	3.7	20
67-21/B7C-AS2U1N/2T	3.5x2.7x1.9	Blue	464.5~476.5	225	565	2.7	3.7	20
67-21/GBC-YV2W2N/2T	3.5x2.7x1.9	Brilliant Green	520~535	900	1800	2.7	3.7	20
67-21/GHC-AS2U1B17Z/2T	3.5x2.7x1.9	Brilliant Green	517.5~535.5	225	565	2.5	3.5	10
67-21/GHC-BV1/2T	3.5x2.7x1.9	Brilliant Green	523.5~533.5	715	900	2.7	4.3	20
67-21/R6C-AP2R1B/2T	3.5x2.7x1.9	Brilliant Red	617.5~633.5	57	140	1.75	2.35	20
67-21/R6C-FN2Q1BZ/2T	3.5x2.7x1.9	Brilliant Red	621~631	36	90	1.75	2.35	10
67-21/R6C-FR2T1B/2T	3.5x2.7x1.9	Brilliant Red	621~631	140	360	1.75	2.35	20
67-21/R6C-FS1U1B/2T	3.5x2.7x1.9	Brilliant Red	621~631	180	565	1.75	2.35	20
67-21/RSC-FT2V1B/2T	3.5x2.7x1.9	Brilliant Red	621~631	360	900	1.75	2.35	20
67-21/S2C-FQ2R2B/2T	3.5x2.7x1.9	Brilliant Orange	603~609	90	180	1.75 / 2	2.35	20
67-21/S3C-AS1T1/2T	3.5x2.7x1.9	Reddish Orange	605.5~621.5	180	360	2	2.4	20
67-21/T2C-ZV1W2E/2T	3.5x2.7x1.9	White	x=0.2498~0.296 y=0.2185~0.2950	715	1800	2.75	3.65	20
67-21/Y2C-BR2T1B/2T	3.5x2.7x1.9	Brilliant Yellow	588.5~594.5	140	360	1.75	2.35	20
67-21/YSC-FU1V2B/2T	3.5x2.7x1.9	Brilliant Yellow	586~594	450	1120	1.75	2.35	20

SMD LED ▌Surface Mount PLCC LEDs (Reflector) ▌Top View PLCC3

UNIT : mm

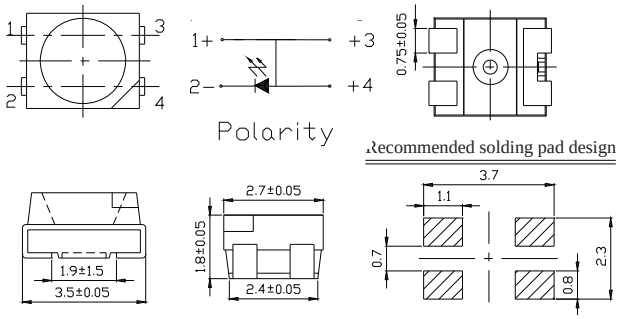

Product	Size (LxWxHmm)	Color	λ_d (nm)/ CIE(x,y)	I_V Min./ Typ. (mcd)	I_V Max. (mcd)	V_F Min./Typ. (V)	V_F Max. (V)	I_F (mA)
67-31A/B7C-AT1U2MZ3/2T	3.5x2.7x1.8	Blue	464.5~476.5	285	715	2.75	3.95	30
67-31A/GHC-YV1W2EZ3/2T	3.5x2.7x1.8	Green	520~535	715	1800	2.75	3.65	30
67-31A/SAC-AW1X2B9Z5/2T	3.5x2.7x1.8	Reddish Orange	605.5~625.5	1120	2850	1.95	2.75	50

SMD LED ▌Surface Mount PLCC LEDs (Reflector) ▌Top View PLCC3

UNIT : mm

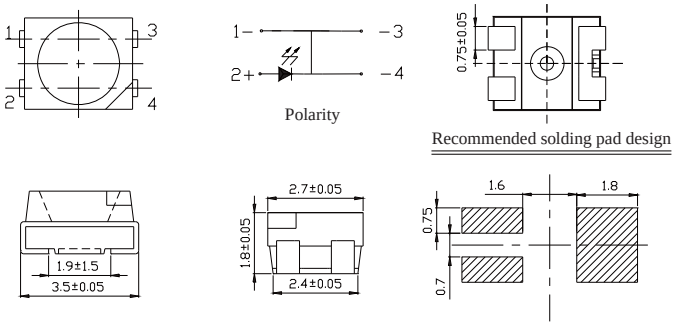

Product	Size (LxWxHmm)	Color	λ_d (nm)/ CIE(x,y)	I_V Min./ Typ. (mcd)	I_V Max. (mcd)	V_F Min./Typ. (V)	V_F Max. (V)	I_F (mA)
67-31E/RSC-AV1W2B9Z5/2T	3.5x2.7x1.8	Brilliant Red	617.5~633.5	715	1800	2.15	2.75	50

SMD LED ▌Surface Mount PLCC LEDs (Reflector) ▌Side View LED

UNIT : mm

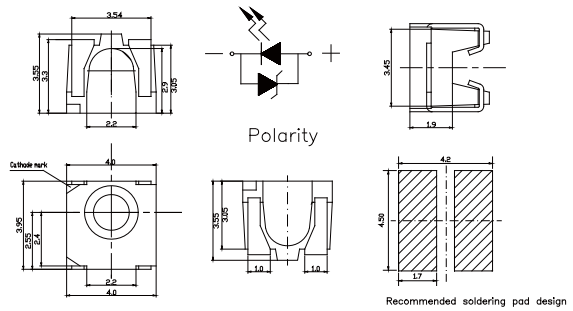

Product	Size (LxWxHmm)	Color	λ_d (nm)/CIE(x,y)	I_V Min./Typ. (mcd)	I_V Max. (mcd)	V_F Min./Typ. (V)	V_F Max. (V)
57-11UTC/S827-1/TR8	4.0x4.0x3.6	White	x=0.3070~0.3520 y=0.2840~0.3710	900	1800	2.75	3.95

UNIT : mm

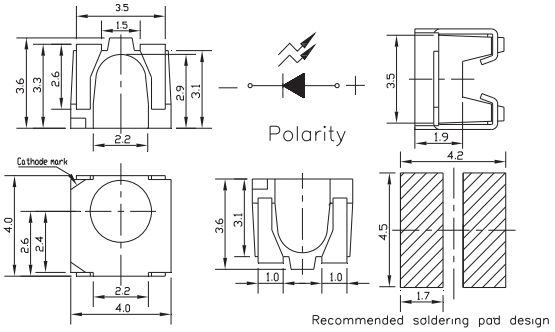

Product	Size (LxWxHmm)	Color	λ_d (nm)/CIE(x,y)	I_V Min./Typ. (mcd)	I_V Max. (mcd)	V_F Min./Typ. (V)	V_F Max. (V)	I_F (mA)
57-21/R6C-AP1Q2B/BF	4.0x4.0x3.6	Brilliant Red	617.5~633.5	45	112	1.75	2.35	10
57-21SYGC/S530-E3/TR8	4.0x4.0x3.6	Brilliant Yellow Green	573	32/51	--	1.7 / 2.0	2.4	20

LED Lamps ▌2mm Tower Type

UNIT : mm

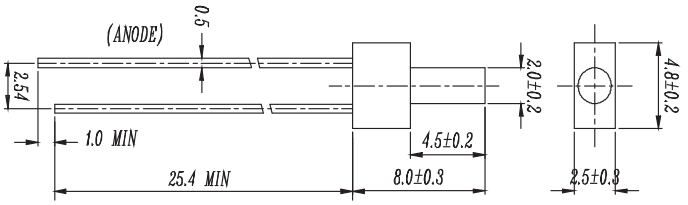

Product	Size (mm)	Color	Lens Type	λ_d (nm) / CIE(x,y)	Resin Color	I_v (Min/Typ) (mcd)	V_F (Typ/Max) (V)	Viewing Angle (º)
103SURD/S530-A3	2	Brilliant Red	Tower	624	Red Diffused	25 / 40	2.0 / 2.4	130
103SYGD/S530-E2	2	Brilliant Yellow Green	Tower	573	Green Diffused	6.3 / 12.5	2.0 / 2.4	130
103UYD/S530-A3	3	Brilliant Yellow	Tower	589	Yellow Diffused	25/ 50	2.0 / 2.4	130

LED Lamps ▌3mm Round Type

UNIT : mm

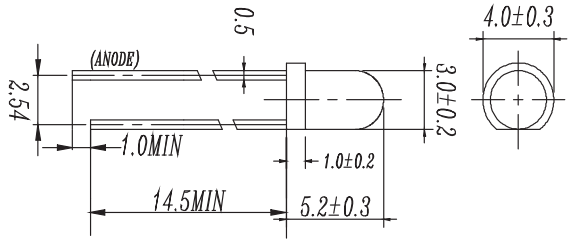

Product	Size (mm)	Color	Lens Type	λ_d (nm) / CIE(x,y)	Resin Color	I_v (Min/Typ) (mcd)	V_F (Typ/Max) (V)	Viewing Angle (º)
204-10SDRD/S530-A3	3	Deep Red	Round	639	Red Diffused	40 / 80	2.0 / 2.4	50
204-10SUBC/S400-A4	3	Blue	Round	470	Water Clear	400 / 800	3.4 / 4.0	20
204-10SUGC/S400-A5	3	Brilliant Green	Round	525	Water Clear	1600 / 3200	3.2 / 3.7	30
204-10SURD/S530-A3	3	Brilliant Red	Round	624	Red Diffused	40 / 80	2.0 / 2.4	45
204-10SYGD/S530-E3	3	Brilliant Yellow Green	Round	573	Green Diffused	63 / 100	2.0 / 2.4	45
204-10UYD/S530-A3	3	Brilliant Yellow	Round	589	Yellow Diffused	100 / 200	2.0 / 2.4	60
204-10UYOC/S530-A3	3	Brilliant Orange	Round	605	Water Clear	320 / 500	2.0 / 2.4	30

LED Lamps ▌3mm Round Type

UNIT : mm

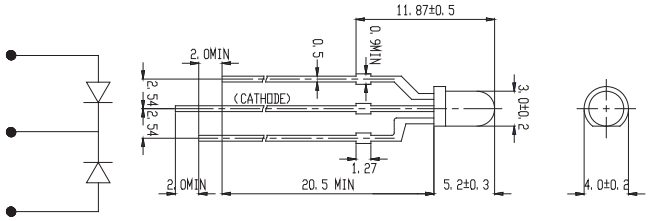

Product	Size (mm)	Color	Lens Type	λ_d (nm) / CIE(x,y)	Resin Color	I_v (Min/Typ) (mcd)	V_F (Typ/Max) (V)	Viewing Angle (º)
209SDRSYGW/S530-A3	3	Deep Red Brilliant Yellow Green	Round	639 / 573	White Diffused	25 / 50 16 / 32	2.0 / 2.4 2.0 / 2.4	80
209SURSYGW/S530-A3	3	Brilliant Red Brilliant Yellow Green	Round	624 / 573	White Diffused	40 / 80 20 / 40	2.0 / 2.4 2.0 / 2.4	80

UNIT : mm

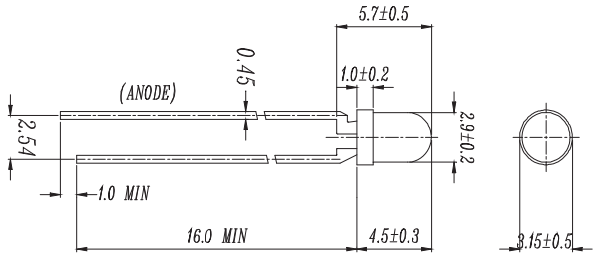

Product	Size (mm)	Color	Lens Type	λ_d (nm) / CIE(x,y)	Resin Color	I_v (Min/Typ) (mcd)	V_F (Typ/Max) (V)	Viewing Angle (º)
264-7SDRC/S530-A3	2.9	Deep Red	Round	639	Water Clear	40 / 100	2.0 / 2.4	40
264-7SUBC/S400-X9	2.9	Blue	Round	470	Water Clear	400 / 800	3.3 / 3.7	30
264-7UYOC/S530-A3	2.9	Brilliant Orange	Round	605	Water Clear	110 / 200	2.0 / 2.4	40
264-7SUGC/S400-A5	2.9	Brilliant Green	Round	525	Water Clear	1000 / 2000	3.3 / 3.7	30
264-7SURC/S400-A8	2.9	Brilliant Red	Round	624	Water Clear	400 / 800	2.0 / 2.4	40
264-7SYGC/S530-E3	2.9	Brilliant Yellow Green	Round	573	Water Clear	100 / 320	2.0 / 2.4	35
264-7UYC/S400-A9	2.9	Brilliant Yellow	Round	589	Water Clear	400 / 800	2.0 / 2.4	40

LED Lamps ▌3mm Round Type

UNIT : mm

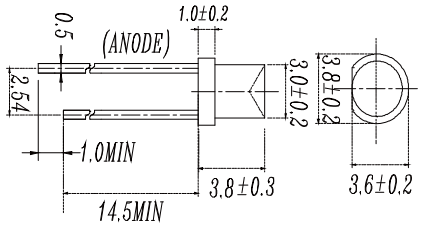

Product	Size (mm)	Color	Lens Type	λ_d (nm) / CIE(x,y)	Resin Color	I_v (Min/Typ) (mcd)	V_F (Typ/Max) (V)	Viewing Angle (º)
484-10SURT/S530-A3	3	Brilliant Red	Round	624	Red Trans	10 / 20	2.0 / 2.4	130
484-10UYT/S530-A3	3	Brilliant Yellow	Round	589	Yellow Trans	16 / 32	2.0 / 2.4	110
484-10SYGT/S530-E2	3	Brilliant Yellow Green	Round	573	Green Trans	6.3 / 12.5	2.0 / 2.4	80
484-10UYOC/S530-A3	3	Brilliant Orange	Round	605	Water Clear	40 / 80	2.0 / 2.4	160

UNIT : mm

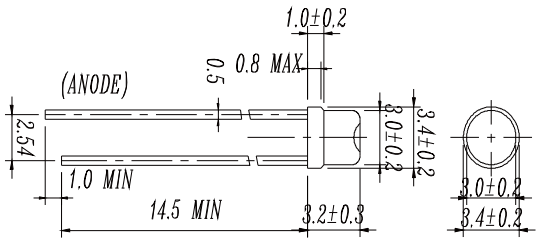

Product	Size (mm)	Color	Lens Type	λ_d (nm)/ CIE(x,y)	Resin Color	I_v (Min/Typ) (mcd)	V_F (Typ/Max) (V)	Viewing Angle (º)
494-10SURT/S530-A3	3	Brilliant Red	Round	624	Red Trans	16 / 32	2.0 / 2.4	100
494-10SYGT/S530-E2	3	Brilliant Yellow Green	Round	573	Green Trans	10 / 20	2.0 / 2.4	100

UNIT : mm

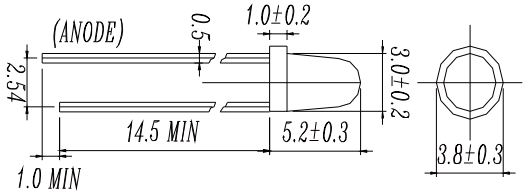

Product	Size (mm)	Color	Lens Type	λ_d (nm)/CIE(x,y)	Resin Color	I_v (Min/Typ) (mcd)	V_F (Typ/Max) (V)	Viewing Angle (º)
1224SYGC/S530-E2	3	Brilliant Yellow Green	Round	573	Water Clear	63 / 100	2.0 / 2.4	25
1224USOC/S530-A3	3	Reddish Orange	Round	615	Water Clear	188 / 295	2.0 / 2.4	25
1224UTC/S400-A6	3	White	Round	x=0.29, y=0.28	Water Clear	715 / 1800	3.2 / 3.6	25
1224SURC/S530-A3	3	Brilliant Red	Round	624	Water Clear	160 / 400	2.0 / 2.4	20
1224UYC/S530-A3	3	Brilliant Yellow	Round	589	Water Clear	160 / 320	2.0 / 2.4	25
1224SDRC/S530-A4	3	Deep Red	Round	639	Water Clear	250 / 500	2.0 / 2.4	25
1224SUGC/S400-A5	3	Brilliant Green	Round	525	Water Clear	1600 / 2000	3.3 / 3.7	30

LED Lamps ▌3mm Round Type

UNIT : mm

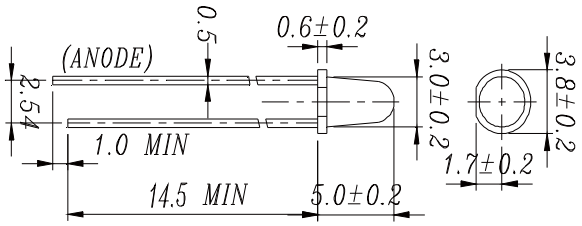

Product	Size (mm)	Color	Lens Type	λ_d (nm) / CIE(x,y)	Resin Color	I_v (Min/Typ) (mcd)	V_F (Typ/Max) (V)	Viewing Angle (°)
1254-10SDRT/S530-A3	3	Deep Red	Round	639	Red Trans	160/320	2.0 / 2.4	30
1254-10SURT/S530-A3	3	Brilliant Red	Round	624	Red Trans	160 / 320	2.0 / 2.4	30
1254-10SYGT/S530-E2	3	Brilliant Yellow Green	Round	573	Green Trans	160 / 320	2.0 / 2.4	30
1254-10UYD/S530-A3	3	Brilliant Yellow	Round	589	Yellow Diffused	100 / 200	2.0 / 2.4	30
1254-10UYOT/S530-A3	3	Brilliant Orange	Round	605	Yellow OrangeTrans	250 / 500	2.0 / 2.4	30

UNIT : mm

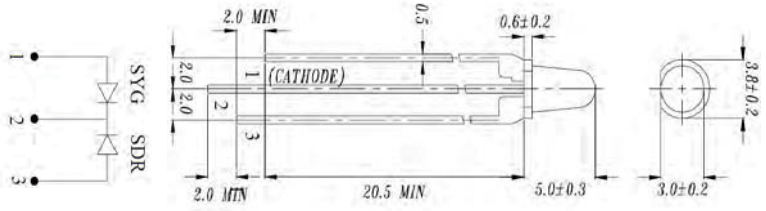

Product	Size (mm)	Color	Lens Type	λ_d (nm)/CIE(x,y)	Resin Color	I_v (Min/Typ) (mcd)	V_F (Typ/Max) (V)	Viewing Angle (°)
1259-7SDRSYGW/S530-A3	3	Deep Red Brilliant Yellow Green	Round	639 / 573	White Diffused	16 / 32 25 / 50	2.0 / 2.4 2.0 / 2.4	50
1259-7SURSYGW/S530-A3	3	Brilliant Red Brilliant Yellow Green	Round	624 / 573	White Diffused	40 / 80 16 / 32	2.0 / 2.4 2.0 / 2.4	60
1259-7UYSYGW/S530-A3	3	Brilliant Yellow Brilliant Yellow Green	Round	589 / 573	White Diffused	63 / 125 40 / 80	2.0 / 2.4 2.0 / 2.4	40

LED Lamps ▌3mm Round Type

UNIT : mm

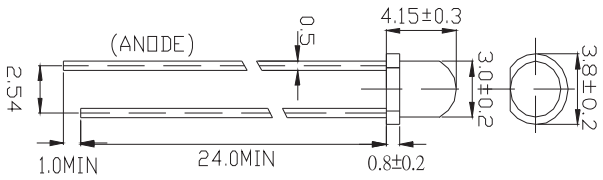

Product	Size (mm)	Color	Lens Type	λ_d (nm)/ CIE(x,y)	Resin Color	I_v (Min/Typ) (mcd)	V_F (Typ/Max) (V)	Viewing Angle (º)
3294-15SUBC/S400-A6	3	Blue	Round	470	Water Clear	160 / 320	3.4 / 4.0	90
3294-15SUGC/S400-A6	3	Brilliant Green	Round	525	Water Clear	500 / 1250	3.4 / 4.0	45
3294-15SURC/S400-A7	3	Brilliant Red	Round	624	Water Clear	100 / 200	2.0 / 2.4	90
3294-15UBGC/S400-A6	3	Bluish Green	Round	505	Water Clear	400 / 800	3.5 / 4.3	90

UNIT : mm

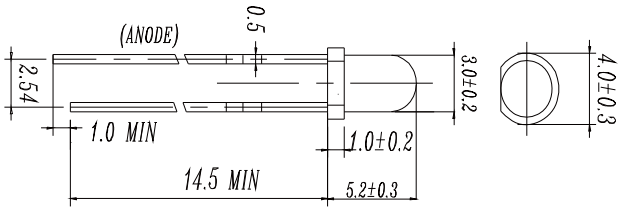

Product	Size (mm)	Color	Lens Type	λ_d (nm)/ CIE(x,y)	Resin Color	I_v (Min/Typ) (mcd)	V_F (Typ/Max) (V)	Viewing Angle (º)
4204-10SYGC/S530-E4	3	Brilliant Yellow Green	Round	573	Water Clear	250 / 500	2.0 / 2.4	20
4204-10SURC/S530-A3	3	Brilliant Red	Round	624	Water Clear	320 / 500	2.0 / 2.4	25

LED Lamps ▌5mm Round Type

UNIT : mm

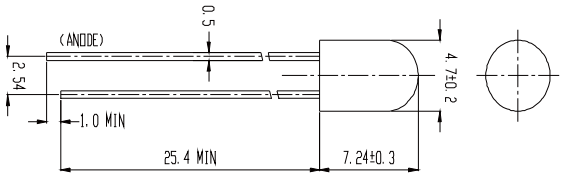

Product	Size (mm)	Color	Lens Type	λ_d (nm)/ CIE(x,y)	Resin Color	I_v (Min/Typ) (mcd)	V_F (Typ/Max) (V)	Viewing Angle (º)
313-2SYGC/S530-E2	4.7	Brilliant Yellow Green	Round	573	Water Clear	250 / 500	2.0 / 2.4	20
313-2UYD/S530-A3	4.7	Brilliant Yellow	Round	589	Yellow Diffused	100 / 200	2.0 / 2.4	50
313-2SUBC/C470/S400-A4	4.7	Blue	Round	470	Water Clear	630 / 1000	3.4 / 4.0	20

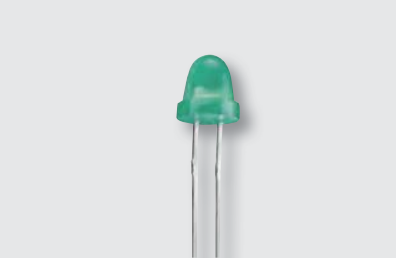

UNIT : mm

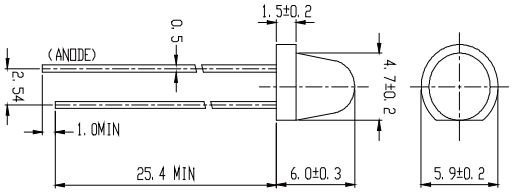

Product	Size (mm)	Color	Lens Type	λ_d (nm)/ CIE(x,y)	Resin Color	I_v (Min/Typ) (mcd)	V_F (Typ/Max) (V)	Viewing Angle (º)
323-2SURD/S530-A3	4.7	Brilliant Red	Round	624	Red Diffused	63 / 100	2.0 / 2.4	40
323-2SYGD/S530-E2	4.7	Brilliant Yellow Green	Round	573	Green Diffused	40 / 80	2.0 / 2.4	60
323-2SDRD/S530-A3	4.7	Deep Red	Round	639	Red Diffused	25 / 50	2.0 / 2.4	60

UNIT : mm

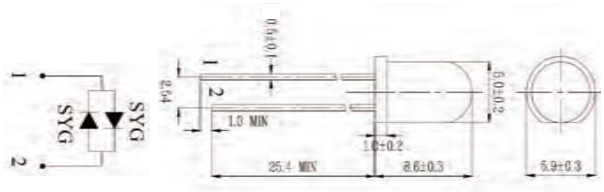

Product	Size (mm)	Color	Lens Type	λ_d (nm)/ CIE(x,y)	Resin Color	I_v (Min/Typ) (mcd)	V_F (Typ/Max) (V)	Viewing Angle (º)
336SURSYGW/S530-A3	5	Brilliant Red Brilliant Yellow Green	Round	624 / 573	White Diffused	16 / 32 16 / 32	2.0 / 2.4 2.0 / 2.4	90
336SYGSYGD/S530-E2	5	Brilliant Yellow Green	Round	573 / 573	Green Diffused	8 / 16	2.0 / 2.4	90
336UYSYGW/S530-A3	5	Brilliant Yellow Brilliant Yellow Green	Round	589/573	White Diffused	40 / 80 16 / 32	2.0 / 2.4 2.0 / 2.4	80

LED Lamps ▌5mm Round Type

UNIT : mm

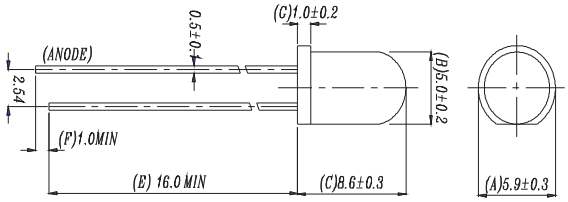

Product	Size (mm)	Color	Lens Type	λ_d (nm)/ CIE(x,y)	Resin Color	I_v (Min/Typ) (mcd)	V_F (Typ/Max) (V)	Viewing Angle (º)
333-2SDRC/S530-A4	5	Deep Red	Round	639	Water Clear	400 / 1000	2.0 / 2.4	10
333-2SUBC/C470/S400-A6	5	Blue	Round	470	Water Clear	1000 / 2000	3.4 / 4.0	10
333-2SUGC/S400-A5	5	Brilliant Green	Round	525	Water Clear	4000 / 8000	3.4 / 4.0	15
333-2SURC/S400-A8	5	Brilliant Red	Round	624	Water Clear	3200 / 5000	2.0 / 2.4	10
333-2SYGC/S530-E2	5	Brilliant Yellow Green	Round	573	Water Clear	400 / 800	2.0 / 2.4	10
333-2UYC/S400-A4	5	Brilliant Yellow	Round	589	Water Clear	1432 / 2148	2.0 / 2.4	10
333-2UYC/S530-A3	5	Brilliant Yellow	Round	589	Water Clear	630 / 1600	2.0 / 2.4	10
333-2UYOC/S530-A3-L	5	Yellow Orange	Round	605	Water Clear	630 / 1250	2.0 / 2.4	10

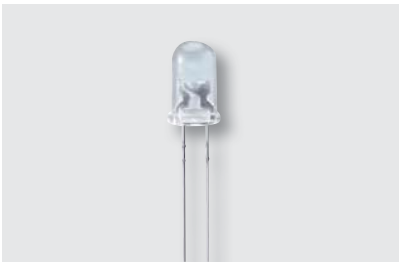

UNIT : mm

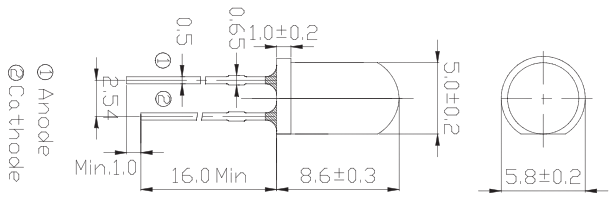

Product	Size (mm)	Color	Lens Type	λ_d (nm)/CIE(x,y)	Resin Color	I_v (Min/Typ) (mcd)	V_F (Typ/Max) (V)	Viewing Angle (º)
334-15/F1C1-1XZA	5	White	Round	x=0.29, y=0.28	Water Clear	18000 / 36000	3.2 / 3.6	15
334-15/T1C1-4WYA	5	White	Round	x=0.30, y=0.29	Water Clear	14250 / 28500	3.2 / 3.6	15
334-15/F1C2-7VXA	5	White	Round	x=0.30, y=0.29	Water Clear	11250 / 22500	3.2 / 3.6	20
334-15/T2C2-1TWB	5	White	Round	x=0.29, y=0.28	Water Clear	7150 / 18000	3.2 / 3.6	20
334-15/T1C3-2TVA	5	White	Round	x=0.26, y=0.27	Water Clear	7150 / 14250	3.2 / 3.6	30
334-15/T2C3-2TVC	5	White	Round	x=0.26, y=0.27	Water Clear	7150 / 14250	3.2 / 3.6	30
334-15/F1C5-1RTA	5	White	Round	x=0.29, y=0.28	Water Clear	4500 / 9000	3.2 / 3.6	50
334-15/T1C5-7QSA	5	White	Round	x=0.30, y=0.29	Water Clear	3600 / 7150	3.2 / 3.6	50
334-15/T2C5-1QSB	5	White	Round	x=0.29, y=0.28	Water Clear	3600 / 7150	3.2 / 3.6	50
334-15/X2C1-1WYB	5	Warm White	Round	x=0.40, y=0.39	Water Clear	14250 / 28500	3.2 / 3.6	15
334-15/X1C2-1UWA	5	Warm White	Round	x=0.40, y=0.39	Water Clear	9000 / 18000	3.2 / 3.6	20
334-15/X2C3-1TVA	5	Warm White	Round	x=0.40, y=0.39	Water Clear	7150 / 14250	3.2 / 3.6	30
334-15/X1C5-1QSA	5	Warm White	Round	x=0.40, y=0.39	Water Clear	3500 / 7150	3.2 / 3.6	50
334-15/X2C5-1PSB	5	Warm White	Round	x=0.40, y=0.39	Water Clear	2850 / 7150	3.2 / 3.6	50

LED Lamps ▌5mm Round Type

UNIT : mm

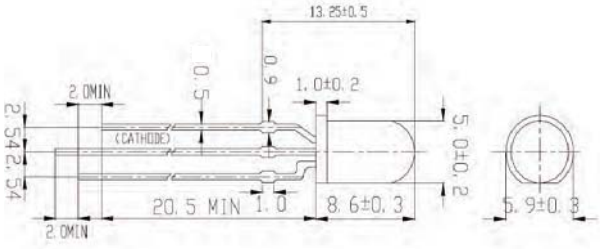

Product	Size (mm)	Color	Lens Type	λ_d (nm)/ CIE(x,y)	Resin Color	I_v (Min/Typ) (mcd)	V_F (Typ/Max) (V)	Viewing Angle (º)
339-1SURSYGW/S530-A3	5	Brilliant Red Brilliant Yellow Green	Round	624 / 573	White Diffused	40 / 80 25 / 50	2.0 / 2.4 2.0 / 2.4	70
339-1UYSYGW/S530-A3	5	Brilliant Yellow Brilliant Yellow Green	Round	589 / 573	White Diffused	63 / 100 32 / 50	2.0 / 2.4 2.0 / 2.4	70
339-1UYUBW/S530-A4	5	Brilliant Yellow Blue	Round	589 / 470	White Diffused	25 / 50 16 / 32	2.0 / 2.4 3.5 / 4.3	100

UNIT : mm

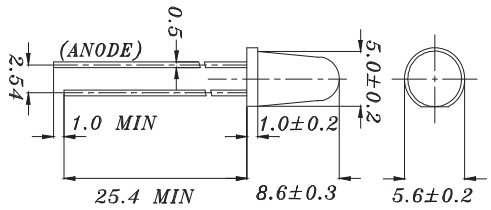

Product	Size (mm)	Color	Lens Type	λ_d (nm)/ CIE(x,y)	Resin Color	I_v (Min/Typ) (mcd)	V_F (Typ/Max) (V)	Viewing Angle (º)
383-2SDRC/S530-A3	5	Deep Red	Round	639	Water Clear	1000 / 2000	2.0 / 2.4	6
383-2SUGC/S400-A4	5	Brilliant Green	Round	525	Water Clear	2500 / 4500	3.3 / 3.7	25
383-2SUBC/C470/S400-A6	5	Blue	Round	470	Water Clear	1600 / 3200	3.4 / 4.0	20
383-2SURC/S530-A3	5	Brilliant Red	Round	624	Water Clear	1000 / 2500	2.0 / 2.4	6
383-2SYGC/S530-E2	5	Brilliant Yellow Green	Round	573	Water Clear	160 / 320	2.0 / 2.4	10
383-2USOC/S530-A6	5	Reddish Orange	Round	615	Water Clear	6300 / 8000	2.0 / 2.4	6
383-2UYC/S530-A3	5	Brilliant Yellow	Round	589	Water Clear	2713 / 4263	2.0 / 2.4	6

UNIT : mm

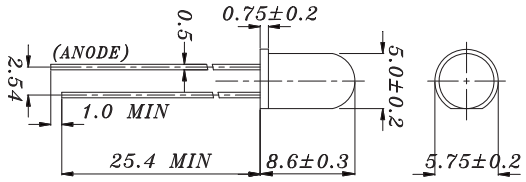

Product	Size (mm)	Color	Lens Type	λ_d (nm)/ CIE(x,y)	Resin Color	I_v (Min/Typ) (mcd)	V_F (Typ/Max) (V)	Viewing Angle (º)
1383-2SDRD/S530-A3	5	Deep Red	Round	639	Red Diffused	160 / 320	2.0 / 2.4	30
1383-2SURD/S530-A3	5	Brilliant Red	Round	624	Red Diffused	250 / 500	2.0 / 2.4	40
1383SYGD/S530-E2	5	Brilliant Yellow Green	Round	573	Green Diffused	100 / 200	2.0 / 2.4	25
1383UYD/S530-A3	5	Brilliant Yellow	Round	589	Yellow Diffused	400 / 800	2.0 / 2.4	25

LED Lamps ▌5mm Round Type

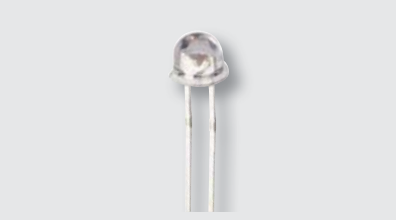

UNIT : mm

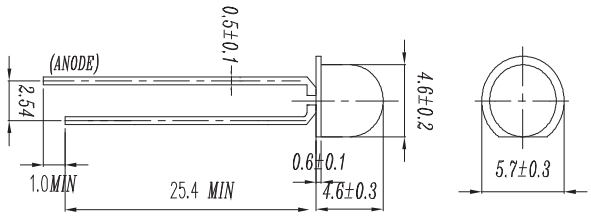

Product	Size (mm)	Color	Lens Type	λ_d (nm)/ CIE(x,y)	Resin Color	I_v (Min/Typ) (mcd)	V_F (Typ/Max) (V)	Viewing Angle (º)
6324-15SUBC/S400-X10	4.6	Blue	Round	470	Water Clear	250 / 500	3.4 / 4.0	60
6324-15SURC/S400-A9	4.6	Brilliant Red	Round	624	Water Clear	160 / 320	2.0 / 2.4	100
6324-15SUGC/S400-A5	4.6	Brilliant Green	Round	525	Water Clear	630 / 1250	3.3 / 3.7	50

UNIT : mm

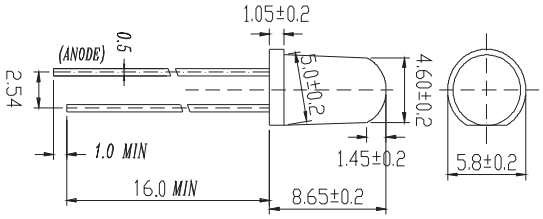

Product	Size (mm)	Color	Lens Type	λ_d (nm)/ CIE(x,y)	Resin Color	I_v (Min/Typ) (mcd)	V_F (Typ/Max) (V)	Viewing Angle (º)
7343-2SURC/S530-A3	4.6	Brilliant Red	Round	624	Water Clear	400 / 800	2.0 / 2.4	20
7343-2SYGC/S530-E2	4.6	Brilliant Yellow Green	Round	573	Water Clear	160 / 320	2.0 / 2.4	20
7343-2USOC/S530-A3	4.6	Reddish Orange	Round	615	Water Clear	630 / 1250	2.0 / 2.4	20
7343-2SURC/S530-A3	4.6	Brilliant Red	Round	624	Water Clear	400/800	1.7/2.4	20

UNIT : mm

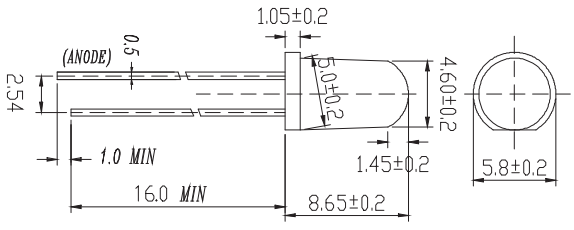

Product	Size (mm)	Color	Lens Type	λ_d (nm)/ CIE(x,y)	Resin Color	I_v (Min/Typ) (mcd)	V_F (Typ/Max) (V)	Viewing Angle (º)
7344-15SUBC/C470/S400-A6	4.6	Blue	Round	470	Water Clear	1000 / 2000	3.4 / 4.0	30
7344-15SUGC/S400-A5	4.6	Brilliant Green	Round	525	Water Clear	5000 / 8000	3.4 / 4.0	30
7344-15SUGC/S400-X6	4.6	Brilliant Green	Round	525	Water Clear	8000 / 11000	3.4 / 4.0	20

LED Lamps ▌3mm Cylindrical

UNIT : mm

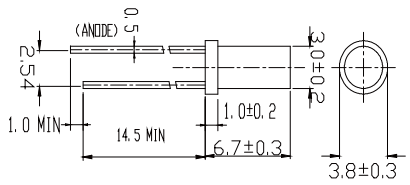

Product	Size (mm)	Color	Lens Type	λ_d (nm)/ CIE(x,y)	Resin Color	I_v (Min/Typ) (mcd)	V_F (Typ/Max) (V)	Viewing Angle (º)
414-10UYD/S530-A3	3	Brilliant Yellow	Cylindrical	589	Yellow Diffused	25 / 40	2.0 / 2.4	120
414-10SURD/S530-A3	3	Brilliant Red	Cylindncal	624	Red Diffused	16 / 32	2.0 / 2.4	120

LED Lamps ▌5mm Cylindrical

UNIT : mm

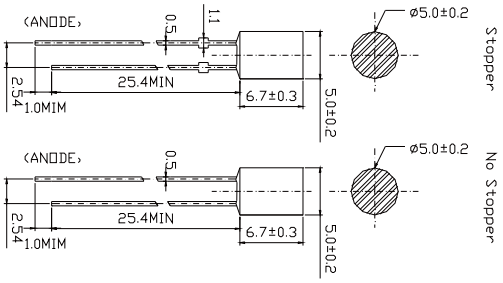

Product	Size (mm)	Color	Lens Type	λ_d (nm)/ CIE(x,y)	Resin Color	I_v (Min/Typ) (mcd)	V_F (Typ/Max) (V)	Viewing Angle (º)
423-2UYC/S530-A6	5	Brilliant Yellow	Cylindrical	589	Water Clear	100 / 200	2.0 / 2.4	90
423-2SURC/S530-A3	5	Brilliant Red	Cylindncal	624	Water Clear	25 / 63	2.0 / 2.4	80
423-2SUBC/S400-X9	5	Blue	Cylindncal	470	Water Clear	100 / 200	3.3 / 3.7	80
423-2UYOC/S530-A6	5	Brilliant Orange	Cylindncal	605	Water Clear	160 / 320	2.0 / 2.4	80

LED Lamps ▌5mm Square

UNIT : mm

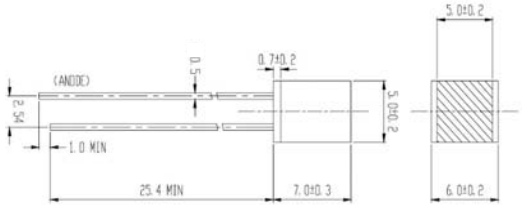

Product	Size (mm)	Color	Lens Type	λ_d (nm)/ CIE(x,y)	Resin Color	I_v (Min/Typ) (mcd)	V_F (Typ/Max) (V)	Viewing Angle (º)
583SURD/S530-A3	5x5	Brilliant Red	Square	624	Red Diffused	12.5 / 20	2.0 / 2.4	130
583SYGD/S530-E2	5x5	Brilliant Yellow Green	Square	573	Green Diffused	2.5 / 5	2.0 / 2.4	170
583UYD/S530-A3	5x5	Brilliant Yellow	Square	589	Yellow Diffused	10 / 20	2.0 / 2.4	170

LED Lamps ▌Rectangular

UNIT : mm

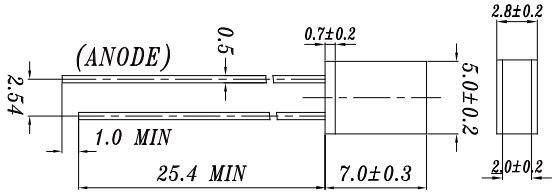

Product	Size (mm)	Color	Lens Type	λ_d (nm)/ CIE(x,y)	Resin Color	I_v (Min/Typ) (mcd)	V_F (Typ/Max) (V)	Viewing Angle (º)
513SURD/S530-A3	2x5	Brilliant Red	Rectangle	624	Red Diffused	10 / 20	2.0 / 2.4	180
513SYGD/S530-E2	2x5	Brilliant Yellow Green	Rectangle	573	Green Diffused	6.3 / 12.5	2.0 / 2.4	140
513UYD/S530-A3	2x5	Brilliant Yellow	Rectangle	589	Yellow Diffused	20 / 32	2.0 / 2.4	150

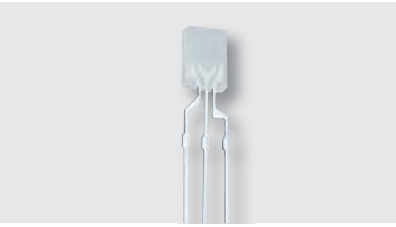

UNIT : mm

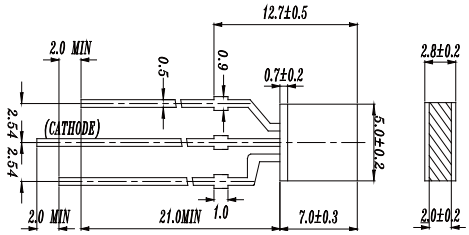

Product	Size (mm)	Color	Lens Type	λ_d (nm)/ CIE(x,y)	Resin Color	I_v (Min/Typ) (mcd)	V_F (Typ/Max) (V)	Viewing Angle (º)
519-1SURSYGW/S530-A3	2x5	Brilliant Red Brilliant Yellow Green	Rectangle	624 / 573	White Diffused	6.3 / 12.5 2.5 / 5.0	2.0 / 2.4 2.0 / 2.4	180

UNIT : mm

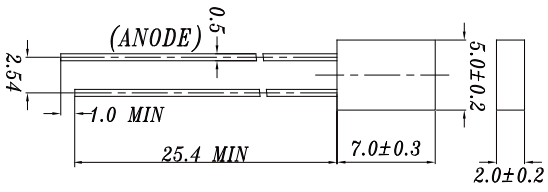

Product	Size (mm)	Color	Lens Type	λ_d (nm)/ CIE(x,y)	Resin Color	I_v (Min/Typ) (mcd)	V_F (Typ/Max) (V)	Viewing Angle (º)
523-2SDRD/S530-A3	2x5	Deep Red	Rectangle	639	Red Diffused	10 / 16	2.0 / 2.4	120
523-2SURD/S530-A3	2x5	Brilliant Red	Rectangle	624	Red Diffused	16 / 32	2.0 / 2.4	120
523-2SUGD/S400-A6	2x5	Brilliant Green	Rectangle	525	Green Diffused	160 / 320	3.3 / 3.7	130
523-2UYD/S530-A3	2x5	Brilliant Yellow	Rectangle	589	Yellow Diffused	6.3 / 12.5	2.0 / 2.4	180
523SYGD/S530-E2	2x5	Brilliant Yellow Green	Rectangle	573	Green Diffused	4 / 8	2.0 / 2.4	150

LED Lamps ▌Rectangular

UNIT : mm

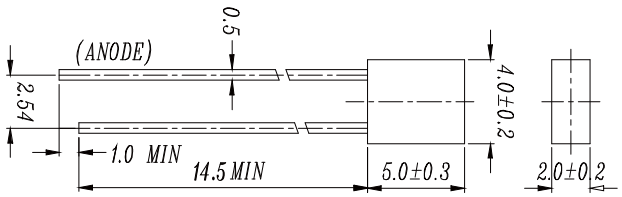

Product	Size (mm)	Color	Lens Type	λ_d (nm)/ CIE(x,y)	Resin Color	I_V (Min/Typ) (mcd)	V_F (Typ/Max) (V)	Viewing Angle (º)
594SURD/S530-A3	2x4	Brilliant Red	Rectangular	624	Red Diffused	10 / 16	2.0 / 2.4	170
594UYD/S530-A3	2x4	Brilliant Yellow	Rectangular	589	Yellow Diffused	10 / 20	2.0 / 2.4	180
594SYGD/S530-E2	2x4	Brilliant Yellow Green	Rectangular	573	Green Diffused	4.0 / 8.0	2.0 / 2.4	180
594UYD/S530-A3	2x4	Brilliant Yellow	Rectangular	589	Yellow Diffused	10 / 20	2.0 / 2.4	180

UNIT : mm

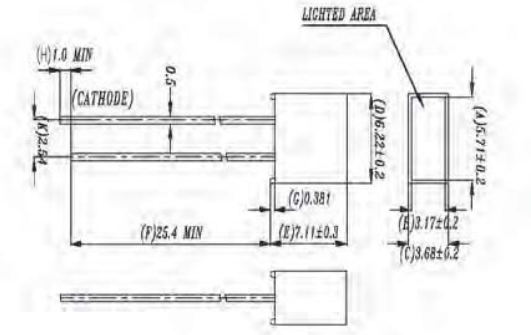

Product	Size (mm)	Color	Lens Type	λ_d (nm)/ CIE(x,y)	Resin Color	I_V (Min/Typ) (mcd)	V_F (Typ/Max) (V)	Viewing Angle (º)
1003SURD/S530-A3	3.68x6.22	Brilliant Red	Rectangular	624	Red Diffused	25 / 50	2.0 / 2.4	110
1003SYGD/S530-E2	3.68x6.22	Brilliant Yellow Green	Rectangular	573	Green Diffused	6.3 / 12.5	2.0 / 2.4	110
1003SUBD/S400-A6	3.68x6.22	Blue	Rectangular	470	Blue Diffused	10 / 20	3.3 / 3.7	110
1003SUGD/S400-A4	3.68x6.22	Brilliant Green	Rectangular	525	Green Diffused	16 / 50	3.3 / 4.0	110

UNIT : mm

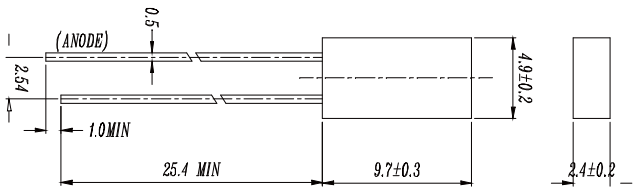

Product	Size (mm)	Color	Lens Type	λ_d (nm)/ CIE(x,y)	Resin Color	I_V (Min/Typ) (mcd)	V_F (Typ/Max) (V)	Viewing Angle (º)
1533SURD/S530-A3	2.4x4.9	Brilliant Red	Round	624	Red Diffused	10 / 20	2.0 / 2.4	170
1533UYD/S530-A3	2.4x4.9	Brilliant Yellow	Round	589	Yellow Diffused	10 / 20	2.0 / 2.4	180

LED Digital Displays ▌Chip On Board Display ▌Single Digit Display

UNIT : mm

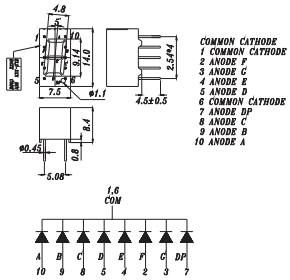

Product	Segement Height mm (inch)	Color	Segement Width	CC/CA	λ_d (nm)	Resin Color	Face Color	I_v (Min/Typ) (mcd)
S315SYGWA/S530-E2	9.14 (0.3)	Brilliant Yellow Green	4.8	CC	573	White	Gray	2.0 / 3.2

UNIT : mm

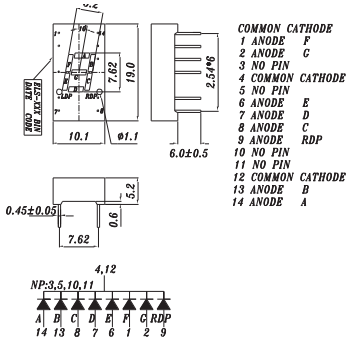

Product	Segement Height mm (inch)	Color	Segement Width	CC/CA	λ_d (nm)	Resin Color	Face Color	I_v (Min/Typ) (mcd)
S321SURWA/S530-A3	7.62 (0.3)	Brilliant Red	5.2	CC	624	White	Gray	5.6 / 11.0
S321USOWA/S530-A4	7.62 (0.3)	Reddish Orange	5.2	CC	615	White	Gray	7.8 / 17.6

UNIT : mm

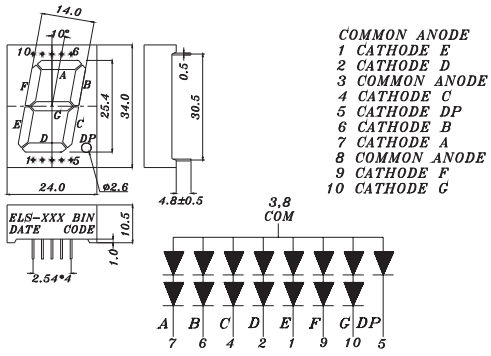

Product	Segement Height mm (inch)	Color	Segement Width	CC/CA	λ_d (nm)	Resin Color	Face Color	I_v (Min/Typ) (mcd)
S1006SURWA/S530-A3	25.4(1.0)	Brilliant Red	14	CA	624	White	Gray	15 / 24
S1006SYGWA/S530-E2	25.4(1.0)	Brilliant Yellow Green	14	CA	573	White	Gray	5.6 / 12.5
S1006SDRDB/A3/S660	25.4(1.0)	Deep-Red	14	CA	639	Red	Black	11.0 / 24.0

LED Digital Displays ▌Chip On Board Display ▌Single Digit Display

UNIT : mm

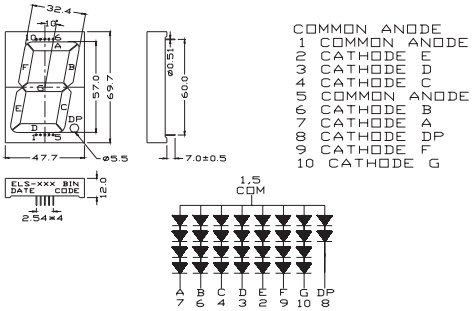

Product	Segement Height mm (inch)	Color	Segement Width	CC/CA	λ_d (nm)	Resin Color	Face Color	I_v (Min/Typ) (mcd)
S2326SURWA/S530-A3	57 (2)	Brilliant Red	32.4	CA	624	White	Gray	15 / 34
S2326USOWA/S530-A4	57 (2)	Reddish Orange	32.4	CA	615	White	Gray	30 / 67
S2326SYGWA/S530-E2	57 (2)	Brilliant Yellow Green	32.4	CA	573	White	Gray	5.6 / 12.5
S2326UBWA/C470	57 (2)	Blue	32.4	CA	470	White	Gray	15 / 34

LED Digital Displays ▌Chip On Board Display ▌Dual Digit Display

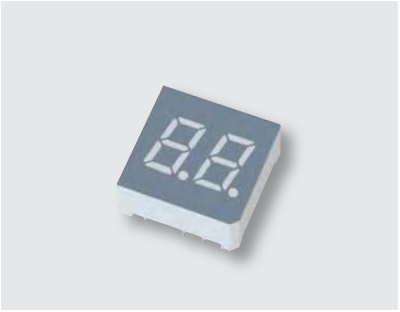

UNIT : mm

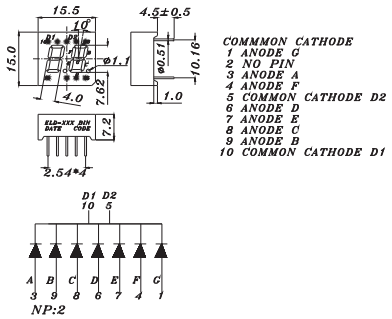

Product	Segement Height mm (inch)	Color	Segement Width	CC/CA	λ_d (nm)	Resin Color	Face Color	I_v (Min/Typ) (mcd)
D305SURWA/S530-A3	7.62 (0.3)	Brilliant Red	4	CC	624	White	Gray	4.0 / 6.4
D305SDRWB/S530-A3	7.62 (0.3)	Deep-Red	4	CC	639	White	Black	2.0 / 4.5

UNIT : mm

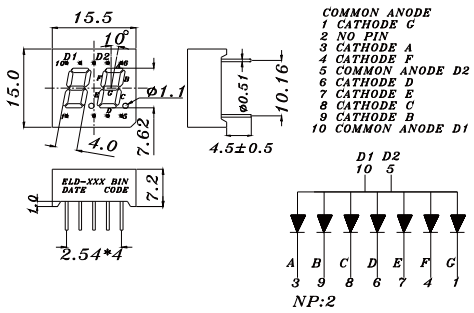

Product	Segement Height mm (inch)	Color	Segement Width	CC/CA	λ_d (nm)	Resin Color	Face Color	I_v (Min/Typ) (mcd)
D306SURWA/S530-A3	7.62 (0.3)	Brilliant Red	4	CA	624	White	Gray	4.0 / 6.4
D306USOWA/S530-A3	7.62 (0.3)	Reddish Orange	4	CA	615	White	Gray	4.0 / 8.9

LED Digital Displays ▌Chip On Board Display ▌Dual Digit Display

UNIT : mm

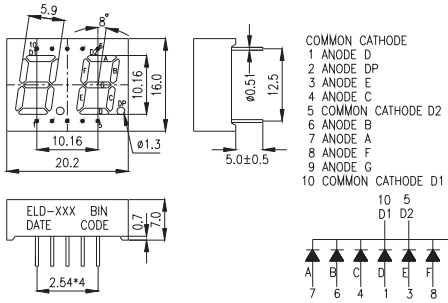

Product	Segement Height mm (inch)	Color	Segement Width	CC/CA	λ_d (nm)	Resin Color	Face Color	I_v (Min/Typ) (mcd)
D425SURWA/S530-A3	10.16 (0.4)	Brilliant Red	5.9	CC	624	White	Gray	7.8 / 15.0
D425USOWA/S530-A4	10.16 (0.4)	Reddish Orange	5.9	CC	615	White	Gray	11.0 / 24.0
D425SYGWA/S530-E2	10.16 (0.4)	Brilliant Yellow Green	5.9	CC	573	White	Gray	2.0 / 3.2
D425SDRWA/S530-A4	10.16 (0.4)	Deep-Red	5.9	CC	639	White	Gray	4.0 / 8.9

UNIT : mm

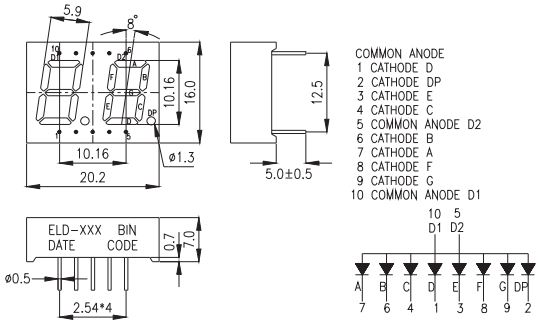

Product	Segement Height mm (inch)	Color	Segement Width	CC/CA	λ_d (nm)	Resin Color	Face Color	I_v (Min/Typ) (mcd)
D426SURWB/S530-A3	10.16 (0.4)	Brilliant Red	5.9	CA	624	White	Black	7.8 / 15
D426USOWA/S530-A3	10.16 (0.4)	Reddish Orange	5.9	CA	615	White	Gray	11 / 24
D426UYOWB/S530-A3	10.16 (0.4)	Brilliant Yellow	5.9	CA	605	White	Black	5.6 / 12.5
D426SYGWA/S530-E2	10.16 (0.4)	Brilliant Yellow Green	5.9	CA	573	White	Gray	2 / 3.2

UNIT : mm

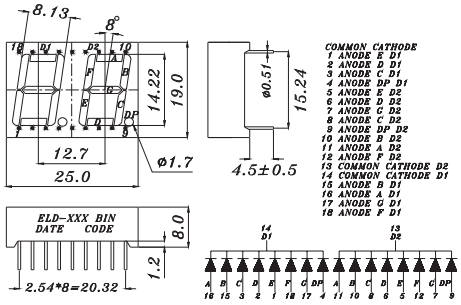

Product	Segement Height mm (inch)	Color	Segement Width	CC/CA	λ_d (nm)	Resin Color	Face Color	I_v (Min/Typ) (mcd)
D511SURWB/S530-A3	14.22 (0.5)	Brilliant Red	8.13	CC	624	White	Black	7.8 / 15
D511SYGWB/S530-E2	14.22 (0.5)	Brilliant Yellow Green	8.13	CC	573	White	Black	2.8 / 6.4

LED Digital Displays ▌Chip On Board Display ▌Dual Digit Display

UNIT : mm

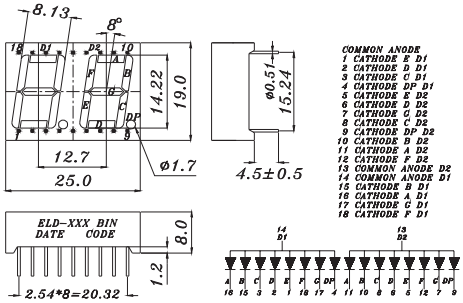

Product	Segement Height mm (inch)	Color	Segement Width	CC/CA	λ_d (nm)	Resin Color	Face Color	I_v (Min/Typ) (mcd)
D512SURWB/S530-A3	14.22 (0.5)	Brilliant Red	8.13	CA	624	White	Black	7.8 / 15
D512UBWA/C470	14.22 (0.5)	Blue	8.13	CA	470	White	Gray	4 / 6.4
D512SDRWB/S530-A3	14.22 (0.5)	Deep-Red	8.13	CA	639	White	Black	2.8 / 6.4
D512SYGWA/S530-E2	14.22 (0.5)	Brilliant Yellow Green	8.13	CA	573	White	Gray	2.8 / 6.4

UNIT : mm

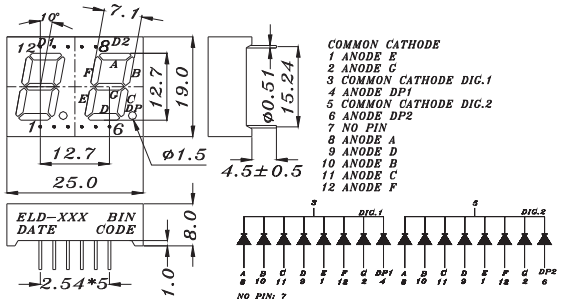

Product	Segement Height mm (inch)	Color	Segement Width	CC/CA	λ_d (nm)	Resin Color	Face Color	I_v (Min/Typ) (mcd)
D515SURWA/S530-A3	12.7 (0.5)	Brilliant Red	7.1	CC	624	White	Gray	7.8 / 15
D516SURWA/S530-A3	12.7 (0.5)	Brilliant Red	7.1	CA	624	White	Gray	7.8 / 15

UNIT : mm

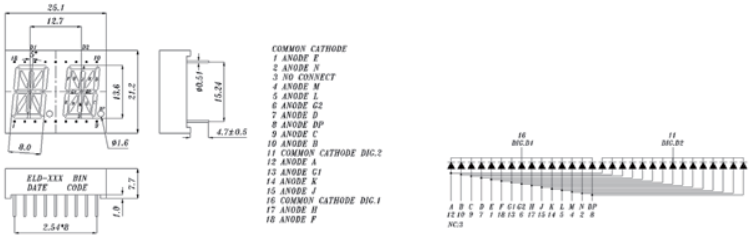

Product	Segement Height mm (inch)	Color	Segement Width	CC/CA	λ_d (nm)	Resin Color	Face Color	I_v (Min/Typ) (mcd)
D525SURWA/S530-A3	13.6 (0.5)	Brilliant Red	8	CC	624	White	Gray	7.8 / 12.5
D525SYGWA/S530-E2	13.6 (0.5)	Brilliant Yellow Green	8	CC	573	White	Gray	2.8 / 4.5

LED Digital Displays ▌Chip On Board Display ▌Dual Digit Display

UNIT : mm

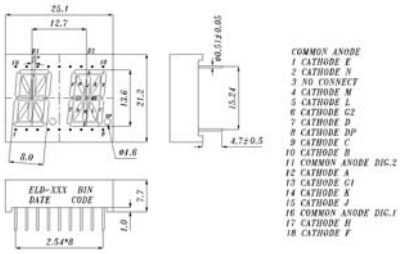

Product	Segement Height mm (inch)	Color	Segement Width	CC/CA	λ_d (nm)	Resin Color	Face Color	I_v (Min/Typ) (mcd)
D526SURWA/S530-A3	13.6 (0.5)	Brilliant Red	8	CA	624	White	Gray	7.8 / 12.5
D526USOWA/S530-A4	13.6 (0.5)	Brilliant Red	8	CA	615	White	Gray	5.2 / 12.5

LED Digital Display ▌Chip On Board Display ▌Three Digit Display

UNIT : mm

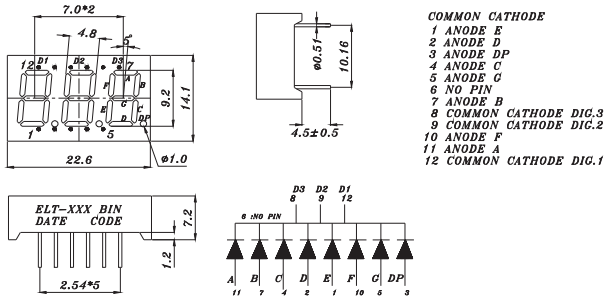

Product	Segement Height mm (inch)	Color	Segement Width	CC/CA	λ_d (nm)	Resin Color	Face Color	I_v (Min/Typ) (mcd)
T315SYGWA/S530-E2	9.2 (0.3)	Brilliant Yellow Green	4.8	CC	573	White	Gray	1.4 / 3.2
T315UYOWA/S530-A3	9.2 (0.3)	Orange	4.8	CC	605	White	Gray	4.0 / 8.9
T315SURWA/S530-A2	9.2 (0.3)	Hyper Red	4.8	CC	624	White	Gray	6.8 / 8.5
T315SDRWA/S530-A3	9.2 (0.3)	Deep-Red	4.8	CC	639	White	Gray	4.0 / 6.4

UNIT : mm

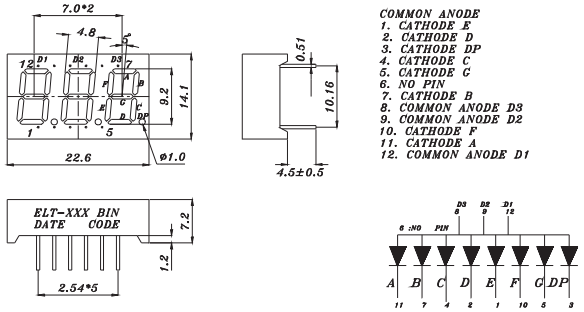

Product	Segement Height mm (inch)	Color	Segement Width	CC/CA	λ_d (nm)	Resin Color	Face Color	I_v (Min/Typ) (mcd)
T316SURWA/S530-A3	9.2 (0.3)	Brilliant Red	4.8	CA	624	White	Gray	5.6 / 11
T316SYGWA/S530-E2	9.2 (0.3)	Brilliant Yellow Green	4.8	CA	573	White	Gray	1.4 / 3.2
T316SDRWA/S530-A3	9.2 (0.3)	Deep-Red	4.8	CA	639	White	Gray	4.0 / 6.4

LED Digital Displays ▌Chip On Board Display ▌Three Digit Display

UNIT : mm

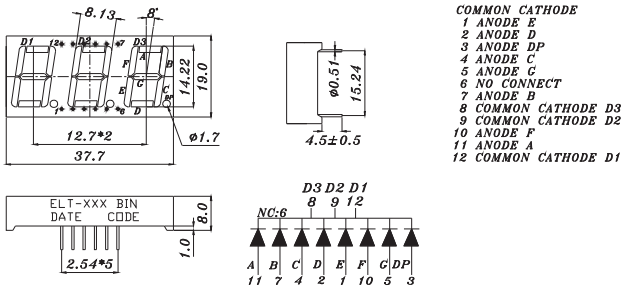

Product	Segement Height mm (inch)	Color	Segement Width	CC/CA	λ_d (nm)	Resin Color	Face Color	I_v (Min/Typ) (mcd)
T511SURWA/S530-A3	14.22 (0.5)	Brilliant Red	8.13	CC	624	White	Gray	7.8 / 17.6
T511SYGWA/S530-E2	14.22 (0.5)	Brilliant Yellow Green	8.13	CC	573	White	Gray	2.8 / 4.5
T511UYOWA/S530-A3	14.22 (0.5)	Brilliant Yellow	8.13	CC	605	White	Gray	5.6 / 12.5
T511SUGWB/S400-A4/S800	14.22 (0.5)	Brilliant Green	8.13	CC	525	White	Black	30.0 / 67.0

UNIT : mm

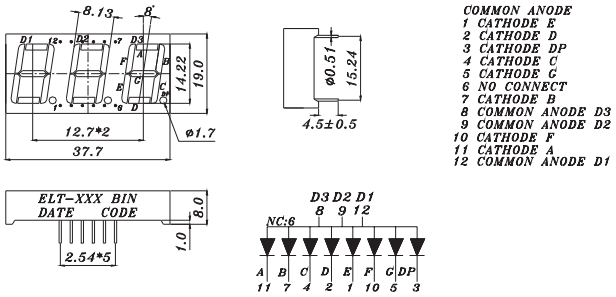

Product	Segement Height mm (inch)	Color	Segement Width	CC/CA	λ_d (nm)	Resin Color	Face Color	I_v (Min/Typ) (mcd)
T512SURWA/S530-A3	14.22 (0.5)	Brilliant Red	8.13	CA	624	White	Gray	7.8 / 17.6
T512SYGWA/S530-E2	14.22 (0.5)	Brilliant Yellow Green	8.13	CA	573	White	Gray	2.8 / 4.5
T512UYOWA/S530-A3	14.22 (0.5)	Brilliant Yellow	8.13	CA	605	White	Gray	5.6 / 12.5
T512USOWA/S530-A4	14.22 (0.5)	Reddish Orange	8.13	CA	615	White	Gray	7.8 / 17.6
T512SURWB/S530-A3	14.22 (0.5)	Brilliant Red	8.13	CA	624	White	Black	7.8 / 17.6
T512SYGWB/S530-E2	14.22 (0.5)	Brilliant Yellow Green	8.13	CA	573	White	Black	2.8 / 4.5

LED Digital Displays ▌Chip On Board Display ▌Four Digit Display

UNIT : mm

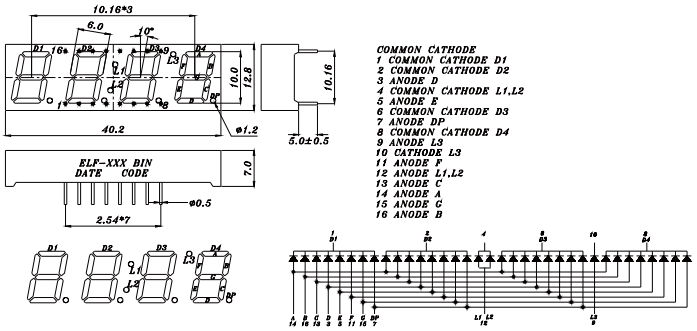

Product	Segement Height mm (inch)	Color	Segement Width	CC/CA	λ_d (nm)	Resin Color	Face Color	I_v (Min/Typ) (mcd)
F415SURWA/S530-A3	10 (0.4)	Brilliant Red	6	CC	624	White	Gray	5.6 / 8.9
F415SURWB/S530-A3	10 (0.4)	Brilliant Red	6	CC	624	White	Black	5.6 / 8.9

UNIT : mm

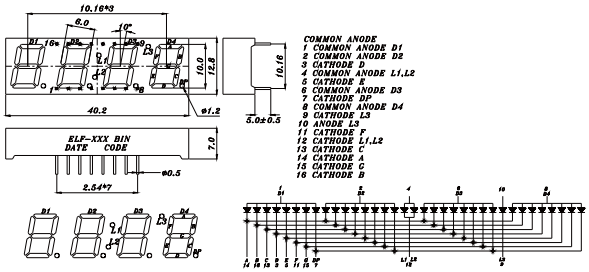

Product	Segement Height mm (inch)	Color	Segement Width	CC/CA	λ_d (nm)	Resin Color	Face Color	I_v (Min/Typ) (mcd)
F416SYGWA/S530-E3	10 (0.4)	Brilliant Yellow Green	6	CA	573	White	Gray	4 / 8.9
F416SURWA/S530-A3	10 (0.4)	Brilliant Red	6	CA	624	White	Gray	5.6 / 8.9
F416USRWA/S530-A3	10 (0.4)	Dark-Red	6	CA	631	White	Gray	5.6 / 8.9
F416SURWB/S530-A3	10 (0.4)	Brilliant Red	6	CA	624	White	Black	5.6 / 8.9

UNIT : mm

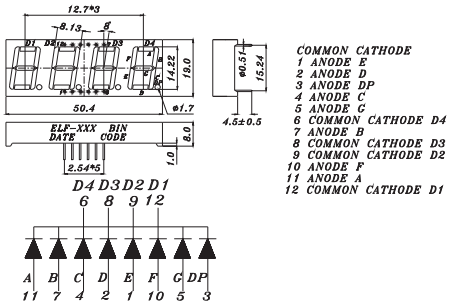

Product	Segement Height mm (inch)	Color	Segement Width	CC/CA	λ_d (nm)	Resin Color	Face Color	I_v (Min/Typ) (mcd)
F511SURWA/S530-A3	14.22 (0.5)	Brilliant Red	8.13	CC	624	White	Gray	7.8 / 15
F511SYGWA/S530-E2	14.22 (0.5)	Brilliant Yellow Green	8.13	CC	573	White	Gray	4 / 4.5
F511SURWB/S530-A3	14.22 (0.5)	Brilliant Red	8.13	CC	624	White	Black	1.4 / 3.0

LED Digital Displays ▌Chip On Board Display ▌Four Digit Display

UNIT : mm

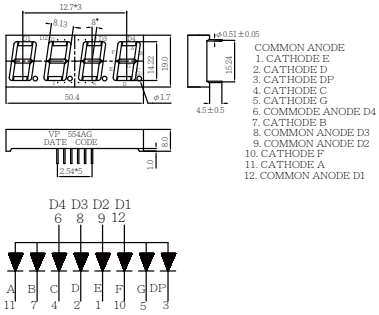

Product	Segement Height mm (inch)	Color	Segement Width	CC/CA	λ_d (nm)	Resin Color	Face Color	I_v (Min/Typ) (mcd)
F512SURWA/S530-A3	14.22 (0.5)	Brilliant Red	8.13	CA	624	White	Gray	7.8 / 15
F512SYGWA/S530-E2	14.22 (0.5)	Brilliant Yellow Green	8.13	CA	573	White	Gray	2.8 / 4.5
F512SDRWB/S530-A3	14.22 (0.5)	Deep-Red	8.13	CA	639	White	Black	5.6 / 12.5

LED Digital Display ▌SMD Display ▌Single Digit Display

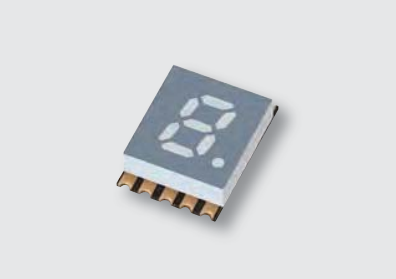

UNIT : mm

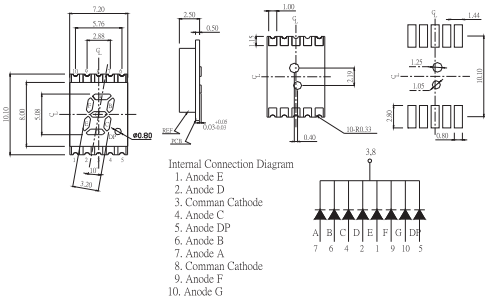

Product	Segement Height mm (inch)	Color	Segement Width	CC/CA	λ_d (nm)	Resin Color	Face Color	I_v (Min/Typ) (mcd)
SS205SURWA/S530-A4/S290	5.08 (0.2)	Brilliant Red	3.2	CC	624	White	Gray	5.6 / 13.7
SS205UYOWA/S530-A3/S290	5.08 (0.2)	Brilliant Orange	3.2	CC	605	White	Gray	7.8 / 13.3
SS205UYWA/S530-A3/S290	5.08 (0.2)	Brilliant Yellow	3.2	CC	589	White	Gray	7.8 / 16.3
SS205SYGWA/S530-E2/S290	5.08 (0.2)	Brilliant Yellow Green	3.2	CC	573	White	Gray	4 / 11.5

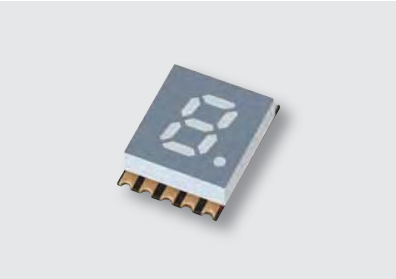

UNIT : mm

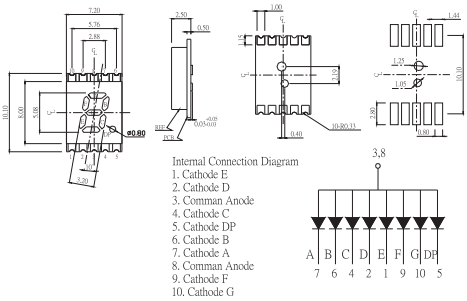

Product	Segement Height mm (inch)	Color	Segement Width	CC/CA	λ_d (nm)	Resin Color	Face Color	I_v (Min/Typ) (mcd)
SS206SURWA/S530-A3/S290	5.08 (0.2)	Brilliant Red	3.2	CA	624	White	Gray	5.6 / 13.7
SS206UYWA/S530-A3/S290	5.08 (0.2)	Brilliant Yellow	3.2	CA	589	White	Gray	7.8 / 16.7
SS206SYGWA/S530-E2/S290	5.08 (0.2)	Brilliant Yellow Green	3.2	CA	573	White	Gray	4.0 / 8.9
SS206USRWA/S530-A3/S290	5.08 (0.2)	Dark-Red	3.2	CA	631	White	Gray	4.0 / 8.9

LED Digital Displays ▌SMD Display ▌Single Digit Display

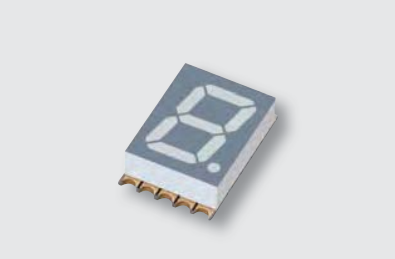

UNIT : mm

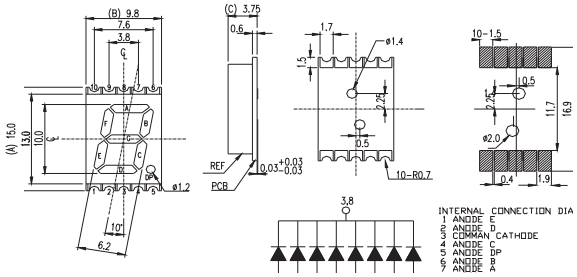

Product	Segement Height mm (inch)	Color	Segement Width	CC/CA	λ_d (nm)	Resin Color	Face Color	I_v (Min/Typ) (mcd)
SS405SYGWA/S530-E2	10 (0.4)	Brilliant Yellow Green	6.2	CC	573	White	Gray	5.6 / 12.5

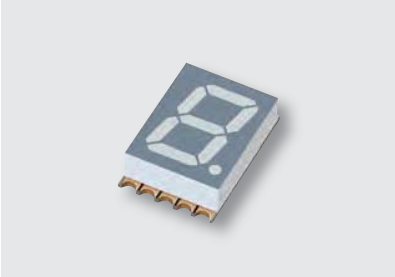

UNIT : mm

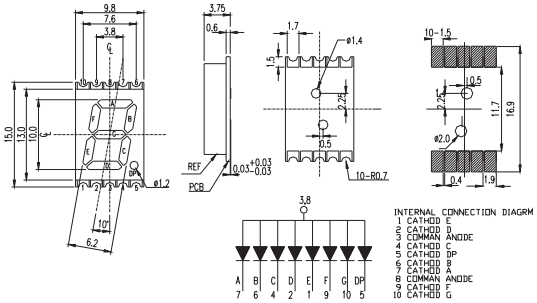

Product	Segement Height mm (inch)	Color	Segement Width	CC/CA	λ_d (nm)	Resin Color	Face Color	I_v (Min/Typ) (mcd)
SS406SYGWA/S530-E2	10 (0.4)	Brilliant Yellow Green	6.2	CA	573	White	Gray	5.6 / 12.5
SS406USRWA/S530-A3/S290	10 (0.4)	Dark-Red	6.2	CA	631	White	Gray	5.6 / 12.5
SS406UBWA/C470/S290	10 (0.4)	Blue	6.2	CA	470	White	Gray	15.0 / 40.5
SS406UWWA/S290	10 (0.4)	Pure White	6.2	CA	X 0.270 / 0.310 Y 0.222 / 0.343	White	Gray	30.0 / 67.0

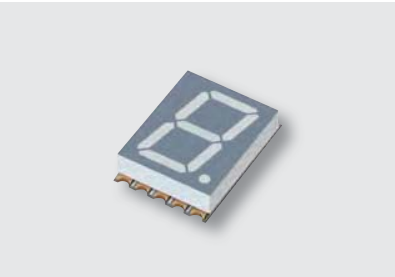

UNIT : mm

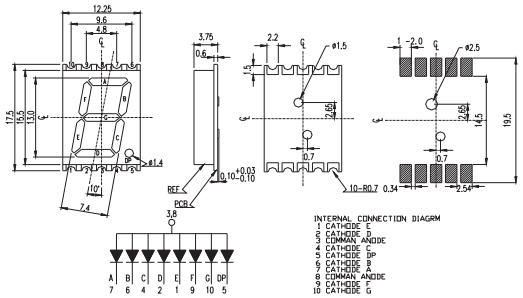

Product	Segement Height mm (inch)	Color	Segement Width	CC/CA	λ_d (nm)	Resin Color	Face Color	I_v (Min/Typ) (mcd)
SS506SYGWA/S530-E2	13.0 (0.5)	Brilliant Yellow Green	7.4	CA	573	White	Gray	5.6 / 9.1
SS506SURWA/S530-A4/S290	13.0 (0.5)	Brilliant Red	7.4	CA	624	White	Gray	7.8 / 15.0

LED Digital Displays ▌SMD Display ▌Single Digit Display

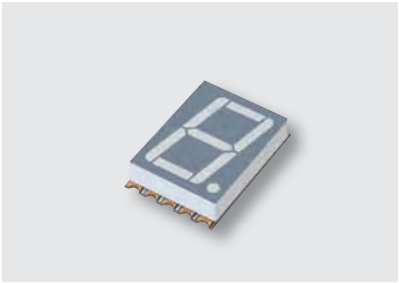

UNIT : mm

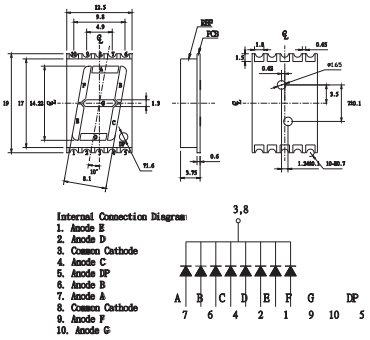

Product	Segement Height mm (inch)	Color	Segement Width	CC/CA	λ_d (nm)	Resin Color	Face Color	I_v (Min/Typ) (mcd)
SS511SURWA/S530-A3/S290	14.22 (0.5)	Brilliant Red	8.1	CC	624	White	Gray	15 / 23
SS511SYGWA/S530-E2/S290	14.22 (0.5)	Brilliant Yellow Green	8.1	CC	573	White	Gray	4 / 10.8
SS511UBWA/C470	14.22 (0.5)	Blue	8.1	CC	470	White	Gray	11.0 / 24.0

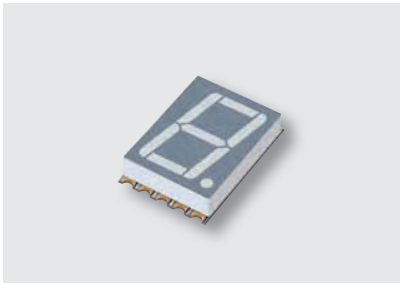

UNIT : mm

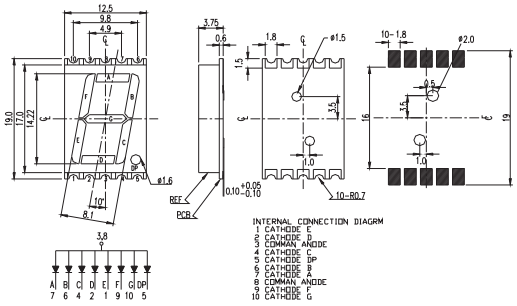

Product	Segement Height mm (inch)	Color	Segement Width	CC/CA	λ_d (nm)	Resin Color	Face Color	I_v (Min/Typ) (mcd)
SS512SURWA/S530-A3/S290	14.22 (0.5)	Brilliant Red	8.1	CA	624	White	Gray	11 / 21.8
SS512SYGWA/S530-E2	14.22 (0.5)	Brilliant Yellow Green	8.1	CA	573	White	Gray	4.0 / 8.9

LED Digital Display ▌SMD Display ▌Dual Digit Display

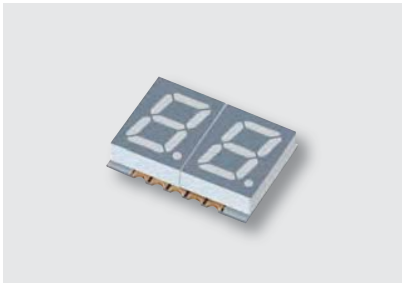

UNIT : mm

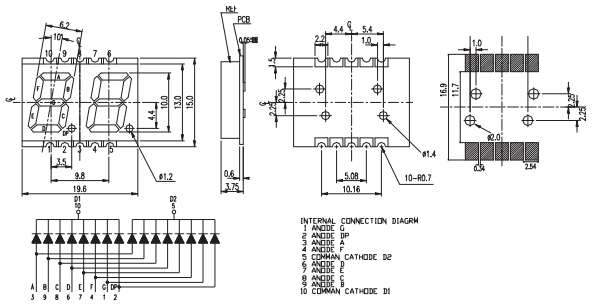

Product	Segement Height mm (inch)	Color	Segement Width	CC/CA	λ_d (nm)	Resin Color	Face Color	I_v (Min/Typ) (mcd)
SD405SURWA/S530-A3/S290	10 (0.4)	Brilliant Red	6.2	CC	624	White	Gray	7.8 / 17.1
SD405SYGWA/S530-E2	10 (0.4)	Brilliant Yellow Green	6.2	CC	573	White	Gray	5.6 / 12.5

LED Digital Displays ▌SMD Display ▌Dual Digit Display

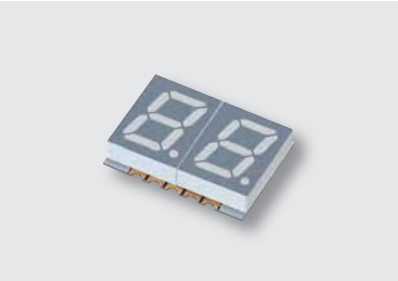

UNIT : mm

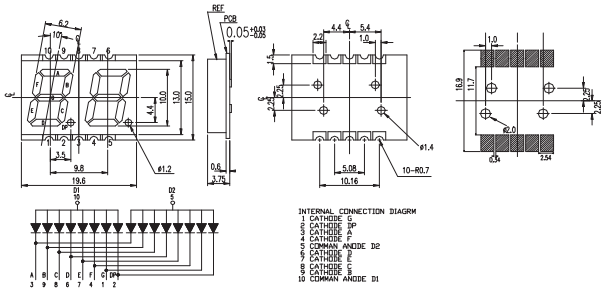

Product	Segement Height mm (inch)	Color	Segement Width	CC/CA	λ_d (nm)	Resin Color	Face Color	I_v (Min/Typ) (mcd)
SD406SURWA/S530-A4/S290	10 (0.4)	Brilliant Red	6.2	CA	624	White	Gray	7.8 / 16.2
SD406SYGWA/S530-E2/S290	10 (0.4)	Brilliant Yellow Green	6.2	CA	573	White	Gray	5.6 / 10.2

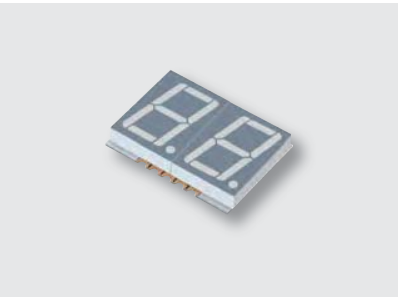

UNIT : mm

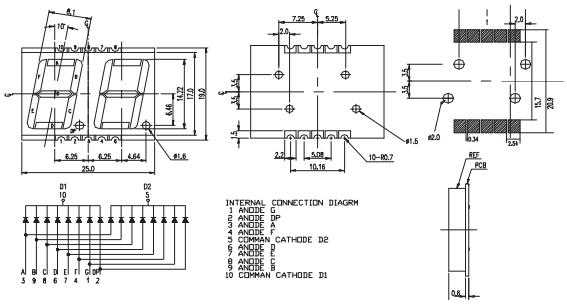

Product	Segement Height mm (inch)	Color	Segement Width	CC/CA	λ_d (nm)	Resin Color	Face Color	I_v (Min/Typ) (mcd)
SD511SYGWA/S530-E2/S290	14.22 (0.5)	Brilliant Yellow Green	8.1	CC	573	White	Gray	5.6 / 11.12

LED Digital Display ▌SMD Display ▌Three Digit Display

UNIT : mm

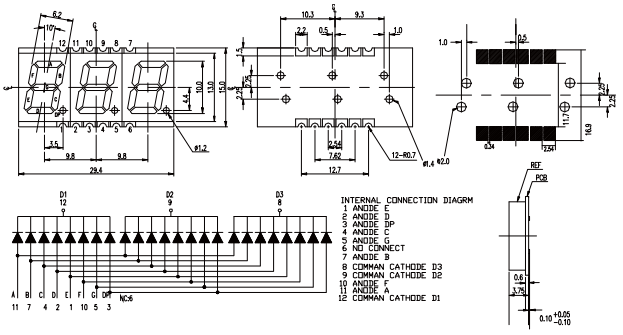

Product	Segement Height mm (inch)	Color	Segement Width	CC/CA	λ_d (nm)	Resin Color	Face Color	I_v (Min/Typ) (mcd)
ST405SURWA/S530-A3/S290	10 (0.4)	Brilliant Red	6.2	CC	624	White	Gray	7.8 / 16.4
ST405SYGWA/S530-E2	10 (0.4)	Brilliant Yellow Green	6.2	CC	573	White	Gray	4.0 / 8.9
ST405UYOWA/S530-A3/S290	10 (0.4)	Brilliant Orange	6.2	CC	605	White	Gray	18.0 / 34.0
ST405SUGWA/S530-A4/S290	10 (0.4)	Brilliant Green	6.2	CC	525	White	Gray	21.0 / 48.0

LED Digital Displays ▌SMD Display ▌Three Digit Display

UNIT : mm

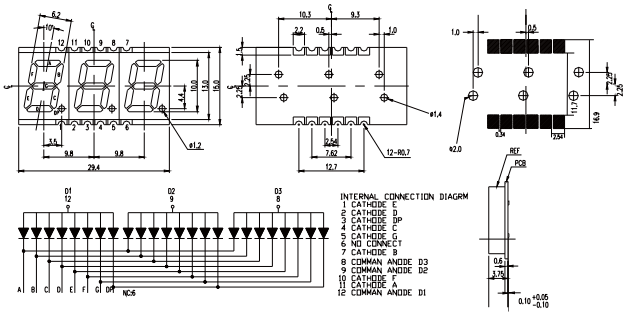

Product	Segement Height mm (inch)	Color	Segement Width	CC/CA	λ_d (nm)	Resin Color	Face Color	I_v (Min/Typ) (mcd)
ST406SURWA/S530-A3/S290	10 (0.4)	Brilliant Red	6.2	CA	624	White	Gray	7.8 / 16.4
ST406SYGWA/S530-E2	10 (0.4)	Brilliant Yellow Green	6.2	CA	573	White	Gray	4.0 / 8.9

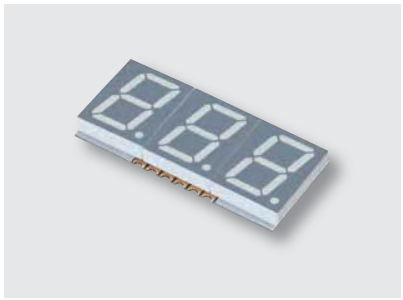

UNIT : mm

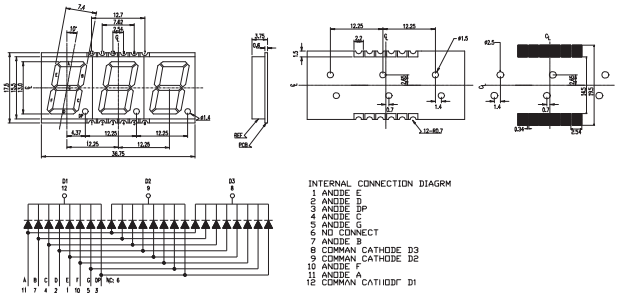

Product	Segement Height mm (inch)	Color	Segement Width	CC/CA	λ_d (nm)	Resin Color	Face Color	I_v (Min/Typ) (mcd)
ST505SYGWA/S530-E2/S290	13 (0.5)	Brilliant Yellow Green	7.4	CC	573	White	Gray	4 / 9.6

UNIT : mm

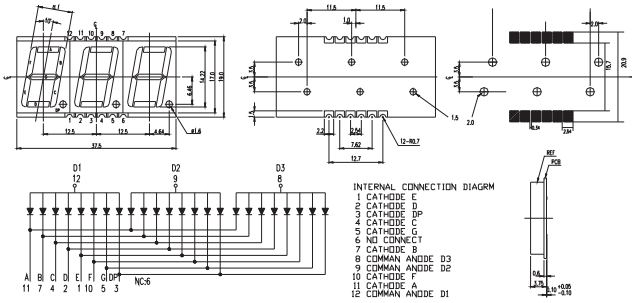

Product	Segement Height mm (inch)	Color	Segement Width	CC/CA	λ_d (nm)	Resin Color	Face Color	I_v (Min/Typ) (mcd)
ST512SURWA/S530-A3/S290	14.22 (0.5)	Brilliant Red	8.1	CA	624	White	Gray	7.8 / 21.6
ST512SYGWA/S530-E2/S290	14.22 (0.5)	Brilliant Yellow Green	8.1	CA	573	White	Gray	7.8 / 16.4
ST512UBWA/C470/S290	14.22 (0.5)	Blue	8.1	CA	470	White	Gray	15.0 / 37.2

LED Digital Displays ▌SMD Display ▌Four Digit Display

UNIT : mm

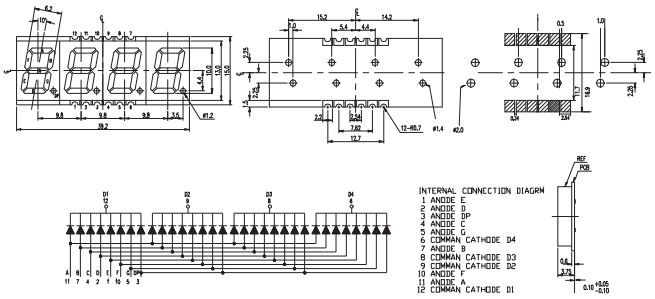

Product	Segement Height mm (inch)	Color	Segement Width	CC/CA	λ_d (nm)	Resin Color	Face Color	I_v (Min/Typ) (mcd)
SF405SURWA/S530-A3/S290	10 (0.4)	Brilliant Red	6.2	CC	624	White	Gray	7.8 / 16.4
SF405UYOWA/A3/S290	10 (0.4)	Brilliant Orange	6.2	CC	605	White	Gray	11.0 / 24.0

UNIT : mm

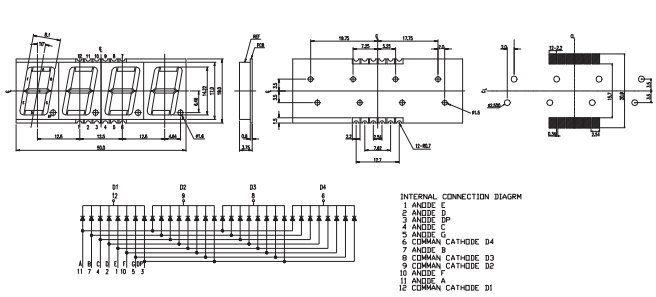

Product	Segement Height mm (inch)	Color	Segement Width	CC/CA	λ_d (nm)	Resin Color	Face Color	I_v (Min/Typ) (mcd)
SF511SURWA/S530-A3/S290	14.22 (0.5)	Brilliant Red	8.1	CC	624	White	Gray	11 / 23.4
SF511SYGWA/S530-E2/S796	14.22 (0.5)	Brilliant Yellow Green	8.1	CC	573	White	Gray	4 / 8.9

UNIT : mm

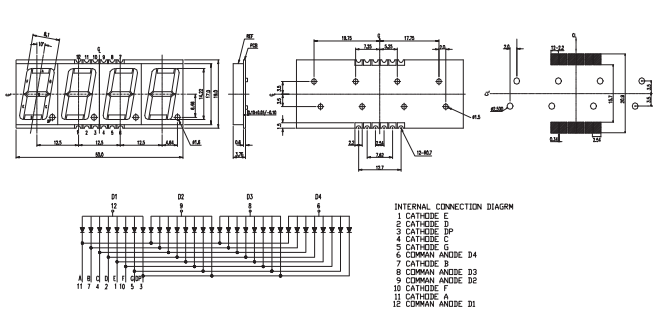

Product	Segement Height mm (inch)	Color	Segement Width	CC/CA	λ_d (nm)	Resin Color	Face Color	I_v (Min/Typ) (mcd)
SF512SURWA/S530-A3/S290	14.22 (0.5)	Brilliant Red	8.1	CA	624	White	Gray	11 / 27.8

LED Digital Displays ▌Dot Matrix Display

UNIT : mm

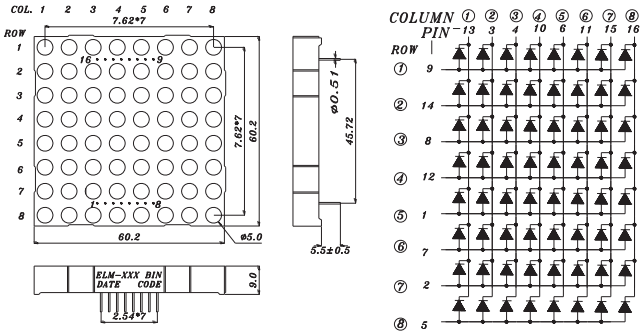

Product	Size (LxWmm)	Color	Segement Width	CC/CA	λ_d (nm)	Resin Color	Face Color	I_v (Min/Typ) (mcd)
M2881SURWA/S530-A3	60.2x60.2	Brilliant Red	--	CC	624	White	Gray	7.8 / 21
M2881SYGWA/S530-E2	60.2x60.2	Brilliant Yellow Green	--	CC	573	White	Gray	7.8 / 17.6
M2881UYWA/S530-A3	60.2x60.2	Brilliant Yellow	--	CC	589	White	Gray	11 / 17.6

LED Digital Displays ▌Light Bar Display

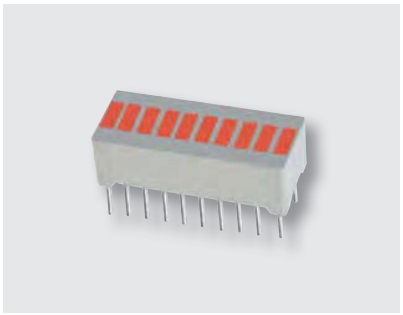

UNIT : mm

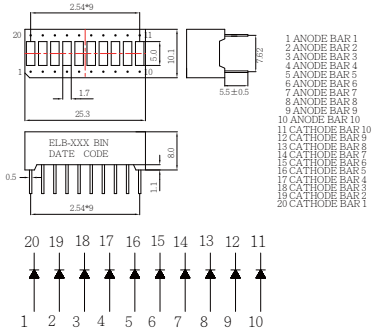

Product	Size (LxWmm)	Color	Segement Width	CC/CA	λ_d (nm)	Resin Color	Face Color	I_v (Min/Typ) (mcd)
B1001USOWA/S530-A4	25.3x10.1	Reddish Orange	--	CC	615	White	Gray	7.8 / 17.6
B1001SYGWA/S530-E2	25.3x10.1	Brilliant Yellow Green	--	CC	573	White	Gray	2.8 / 4.5

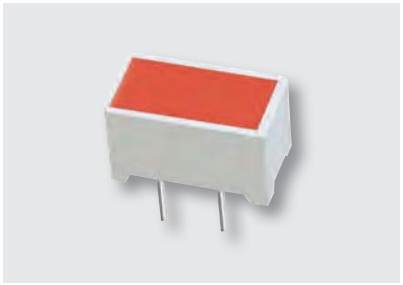

UNIT : mm

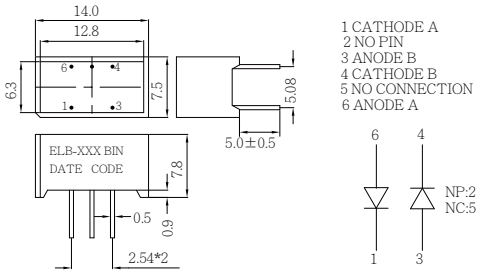

Product	Size (LxWmm)	Color	Segement Width	CC/CA	λ_d (nm)	Resin Color	Face Color	I_v (Min/Typ) (mcd)
B1010SURD/S530-A3	14.0x7.5	Brilliant Red	--	CA	624	Red	Red	11/24
B1010SYGD/S530-E3	14.0x7.5	Brilliant Yellow Green	--	CA	573	Green	--	2.8/6.4

Signage LED ▌Surface Mount Chip LED (PCB)

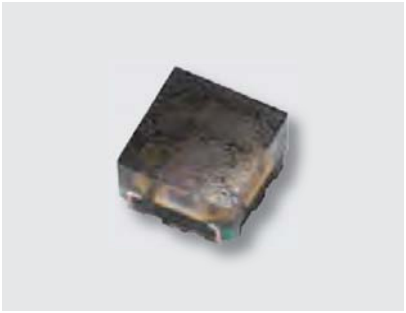

UNIT : mm

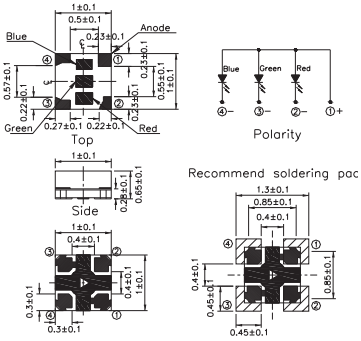

Product	Size (LxWxHmm)	Color	λ_d (nm)	Typ. I_v (mcd)	V_F (V)		I_F (mA)	Viewing Angle (º)
					Typ.	Max.		
18-038BT/BDGAR6S1-L40/10T	1.0x1.0x0.65 (4-pin)	Red	619~629	24	2.0	2.4	5	120
		Green	523~528	80	2.9	3.2		
		Blue	463~468	15	2.9	3.2		

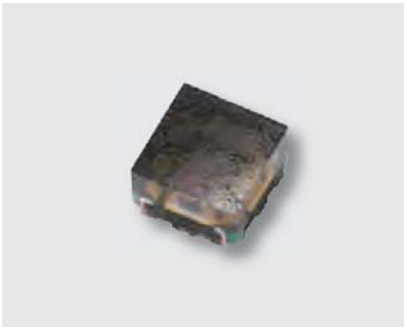

UNIT : mm

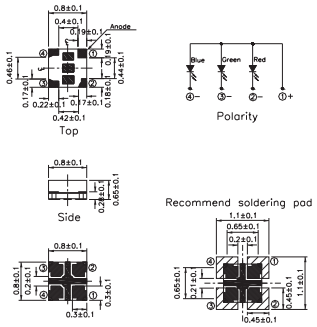

Product	Size (LxWxHmm)	Color	λ_d (nm)	Typ. I_v (mcd)	V_F (V)		I_F (mA)	Viewing Angle (º)
					Typ.	Max.		
18-039B/BDR6GAS1-R40/10T	0.8x0.8x0.65 (4-pin)	Red	619~629	15.4	2.0	2.4	3	120
		Green	525~530	80	2.9	3.2	5	
		Blue	465~470	15	2.9	3.2	5	

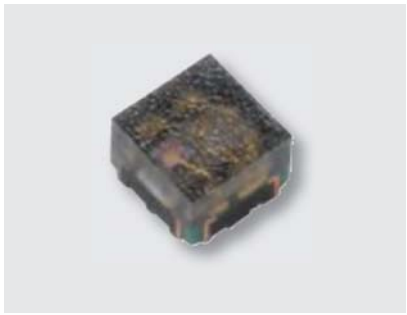

UNIT : mm

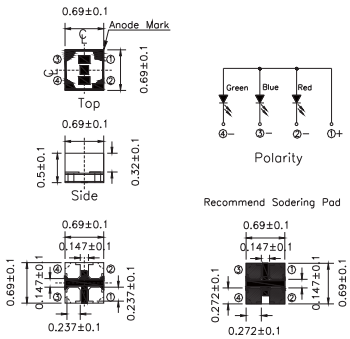

Product	Size (LxWxHmm)	Color	λ_d (nm)	Typ. I_v (mcd)	V_F (V)		I_F (mA)	Viewing Angle (º)
					Typ.	Max.		
18-036BD/BDR6GASY-S01/10T	0.69x0.69x0.5 (4-pin)	Red	616~631	23.4	2.0	2.3	5	120
		Green	515~533	53.4	3.3	3.6		
		Blue	462~477	13.8	3.3	3.6		

Signage LED ▌Surface Mount Chip LED (PCB)

UNIT : mm

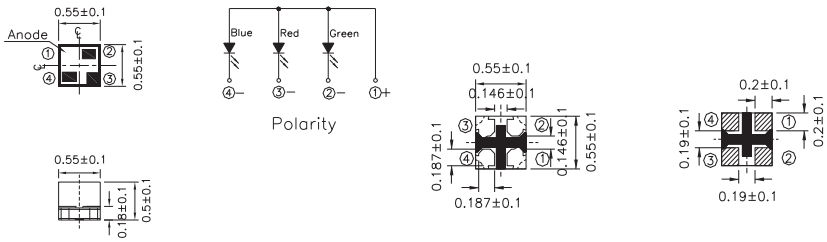

Product	Size (LxWxHmm)	Color	λ_d (nm)	Typ. I_v (mcd)	V_F (V)		I_F (mA)	Viewing Angle (°)
					Typ.	Max.		
18-035BD/BDR6GASY-S01/10T	0.55x0.55x0.5 (4-pin)	Red	616~631	19.5	2.0	2.3	5	120
		Green	515~533	60.9	3.3	3.6		
		Blue	462~477	14	3.3	3.6		

UNIT : mm

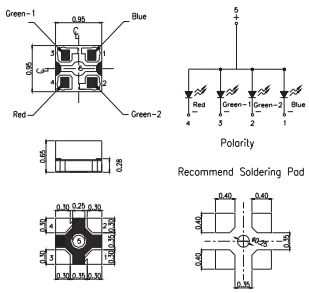

Product	Size (LxWxHmm)	Color	λ_d (nm)	Typ. I_v (mcd)	V_F (V)		I_F (mA)	Viewing Angle (°)
					Typ.	Max.		
19-049/GABDR6GAS1-R40/4T	0.95x0.95x0.65 (4-pin)	Red	619-629	15.4	2.0	2.4	5	120
		Green	525-530	80	2.9	3.2		
		Green	525-530	80	2.9	3.2		
		Blue	465-470	17	2.9	3.2		

For Side View

UNIT : mm

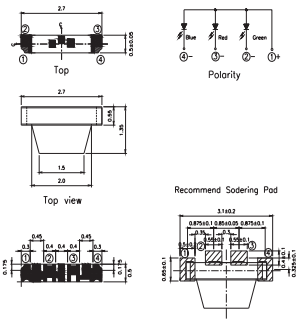

Product	Size (LxWxHmm)	Color	λ_d (nm)	Typ. I_v (mcd)	V_F (V)		I_F (mA)	Viewing Angle (°)
					Typ.	Max.		
22-23C/R6GHBHW-A01/2C	2.7x0.5x0.55 (4-pin)	Red	613~625	90	2.85	2.3	20	120
		Green	515~530	140	2.9	3.7		
		Blue	465~475	72	2.9	3.3		

Signage LED ▌Surface Mount Chip LED (PCB)

For Common Cathode Product

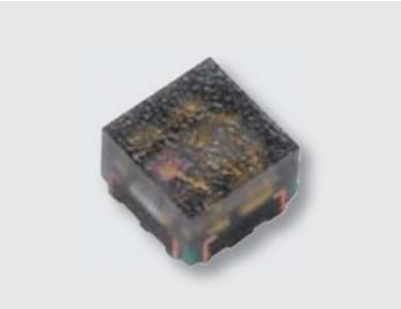

UNIT : mm

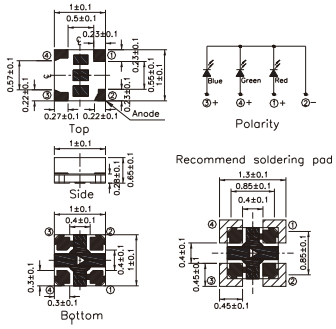

Product	Size (LxWxHmm)	Color	λ_d (nm)	Typ. I_v (mcd)	V_F (V)		I_F (mA)	Viewing Angle (º)
					Typ.	Max.		
18-038ABT/ BDGAR6S1-L40/10T	1.0x1.0x0.65 (4-pin)	● Red	619~629	24	2.0	2.4	5	120
		● Green	523~528	80	2.9	3.2		
		● Blue	463~468	17	2.9	3.2		

UNIT : mm

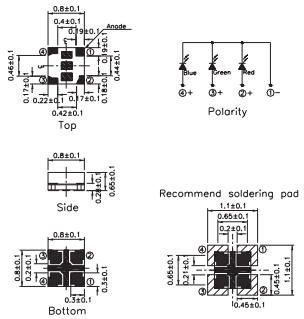

Product	Size (LxWxHmm)	Color	λ_d (nm)	Typ. I_v (mcd)	V_F (V)		I_F (mA)	Viewing Angle (º)
					Typ.	Max.		
18-039AB/BDGAR6S1-R40/10T	0.8x0.8x0.65 (4-pin)	● Red	619~629	15.4	2.0	2.4	5	120
		● Green	525~530	80	2.9	3.2		
		● Blue	465~470	17	2.9	3.2		

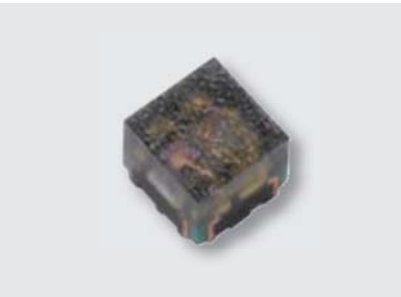

UNIT : mm

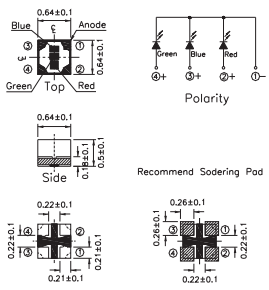

Product	Size (LxWxHmm)	Color	λ_d (nm)	Typ. I_v (mcd)	V_F (V)		I_F (mA)	Viewing Angle (º)
					Typ.	Max.		
18-032ABD/BDGAR6SY-S01/10T	0.64x0.64x0.5 (4-pin)	● Red	616~631	23.4	2.0	2.3	5	120
		● Green	515~533	64.2	3.3	3.6		
		● Blue	462~477	16.5	3.3	3.6		

Signage LED ▌Surface Mount PLCC LED (Reflector)

UNIT : mm

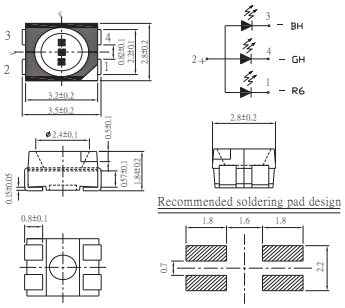

Product	Size (LxWxHmm)	Color	λ_d (nm)	Typ. I_v (mcd)	V_F (V)		I_F (mA)	Viewing Angle (º)
					Typ.	Max.		
67-03A/R6GHBHW-A01/2T/MS	3.5x2.8x1.8	Red	620.5~627.5	226	1.7	2.6	20	120
		Green	518~533	1000	2.7	3.6		
		Blue	461.5~471.5	230	2.7	3.6		

UNIT : mm

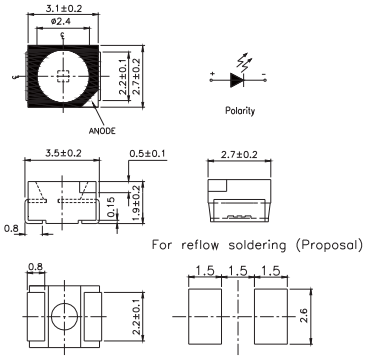

Product	Size (LxWxHmm)	Color	λ_d (nm)	Typ. I_v (mcd)	V_F (V)		I_F (mA)	Viewing Angle (º)
					Typ.	Max.		
67-01/Y2W-MV1W1/2T/MS	2.8X3.5X1.9 (2 pin)	Yellow	585-594	1067.5	2.1	2.4	20	120
		Red	620-629	1010				

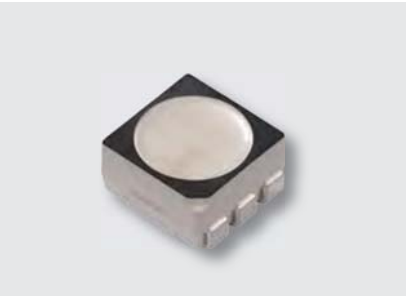

UNIT : mm

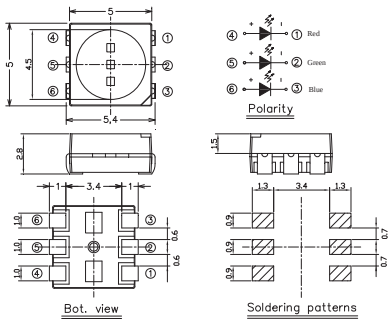

Product	Size (LxWxHmm)	Color	λ_d (nm)	Typ. I_v (mcd)	V_F (V)		I_F (mA)	Viewing Angle (º)
					Typ	Max.		
HN0507	5.0x5.0x2.8	Red	617~629	1020	1.7	2.7	20	120
		Green	522~537	1760	2.7	3.7		
		Blue	460~475	385	2.7	3.7		

• Product Availability : Please visit EVERLIGHT website for more updated information (www.everlight.com) or contact EVERLIGHT sales for regional options.

Signage LED ▌Surface Mount PLCC LED (Reflector)

For Side View

UNIT : mm

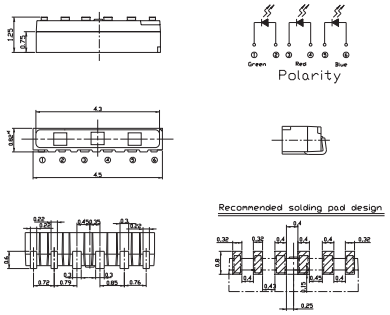

Product	Size (LxWxHmm)	Color	λ_d (nm)	Typ. I_v (mcd)	V_F (V)		I_F (mA)	Viewing Angle (º)
					Typ.	Max.		
99-235/RSGHB7S1-S01/2T	4.5x0.82x1.25 (6-pin)	Red	619~628	670	2.0	2.5	20	120
		Green	522~531	1530	3.2	3.7		
		Blue	463~472	335	3.2	3.7		

For Outdoor

UNIT : mm

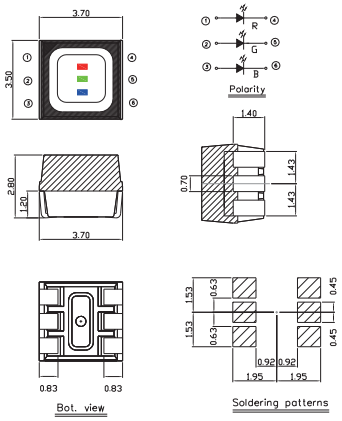

Product	Size (LxWxHmm)	Color	λ_d (nm)	Typ. I_v (mcd)	V_F (V)		I_F (mA)	Viewing Angle (º)
					Typ.	Max.		
HNB3535W-OS01	3.5x3.5x2.8 (6-pin)	Red	615~630	955	2.1	2.6	20	120
		Green	515~535	2490	3.1	3.5		
		Blue	460~480	588	3.1	3.5		

• Product Availability : Please visit EVERLIGHT website for more updated information (www.everlight.com) or contact EVERLIGHT sales for regional options.

Signage LED ▌Surface Mount PLCC LED (Reflector)

For Outdoor

UNIT : mm

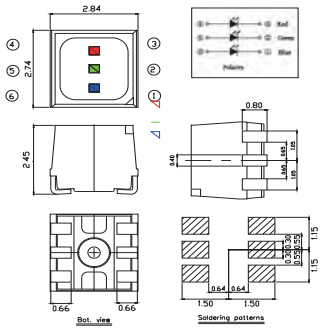

Product	Size (LxWxHmm)	Color	λ_d (nm)	Typ. I_v (mcd)	V_F (V)		I_F (mA)	Viewing Angle (º)
					Typ.	Max.		
HNB2727W-OS01	2.7x2.7x2.45 (6-pin)	Red	615~630	865	2.1	2.6	20	120
		Green	515~535	1905	3.1	3.5	15	
		Blue	465~480	295	3.1	3.5	10	

UNIT : mm

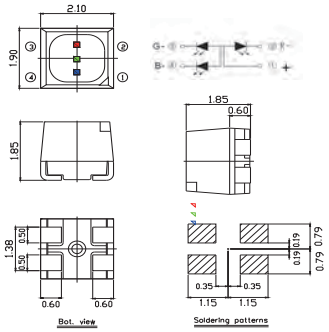

Product	Size (LxWxHmm)	Color	λ_d (nm)	Typ. I_v (mcd)	V_F (V)		I_F (mA)	Viewing Angle (º)
					Typ.	Max.		
HNB1921W-OS01	1.9x2.1x1.85 (4-pin)	Red	615~630	465	2.0	2.4	15	120
		Green	515~535	665	3.0	3.4	8	
		Blue	465~480	125	3.0	3.4	5	

Signage LED ▌Lamp Type LED ▌3mm Oval Type

UNIT : mm

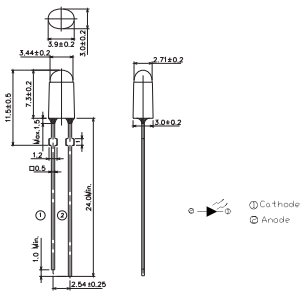

Product	Size (LxWxHmm)	Color	Lens Type	λ_d (nm)	Typ. I_v (mcd)	V_F (V)		I_F (mA)	Viewing Angle (º)
						Typ.	Max.		
3474BARR	3.2X4.1X7.5	Red	OVAL	619~629	1035	2.1	2.6	15	110°/60°
3474BAGR	3.2X4.1X7.5	Green	OVAL	520~535	2125	3.0	3.4	10	110°/60°
3474BABR	3.2X4.1X7.5	Blue	OVAL	460~475	420	3.0	3.4	10	110°/60°

• Product Availability : Please visit EVERLIGHT website for more updated information (www.everlight.com) or contact EVERLIGHT sales for regional options.

Signage LED ▌Lamp Type LED ▌5mm Oval Type

UNIT : mm

(With Stopper)

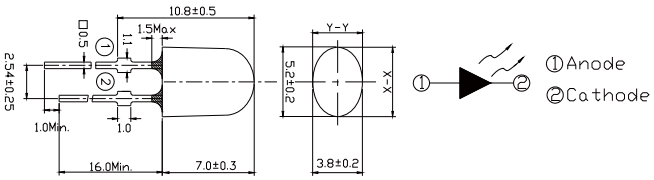

Product	Size (LxWxHmm)	Color	Lens Type	λ_d (nm)	Typ. I_v (mcd)	V_F (V)		I_F (mA)	Viewing Angle (º)
						Typ.	Max.		
5484BN/R7DC-AGJB/P/MS	5.2x3.8x7.0	Red	Oval	619~628	1290	2.2	2.4	20	110 / 40
5484BN/R7DC-AHJB/P/MS	5.2x3.8x7.0	Red	Oval	619~628	1630	2.2	2.4	20	110 / 40
5484BN/GADC-ALMA/P/MS	5.2x3.8x7.0	Green	Oval	525~535	3105	3.2	3.6	20	110 / 40
5484BN/GADC-AMNA/P/MS	5.2x3.8x7.0	Green	Oval	525~535	3925	3.2	3.6	20	110 / 40
5484BN/BADC-AFHA/P/MS	5.2x3.8x7.0	Blue	Oval	465~475	775	3.2	3.6	20	110 / 40
5484BN/BADC-AGJA/P/MS	5.2x3.8x7.0	Blue	Oval	465~475	1085	3.2	3.6	20	110 / 40

UNIT : mm

(With Stopper)

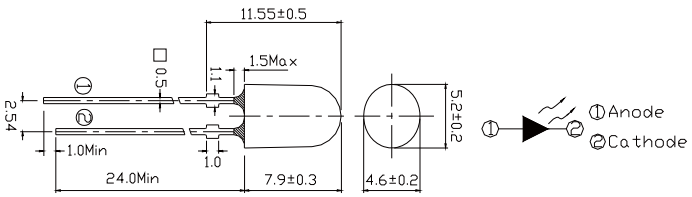

Product	Size (LxWxHmm)	Color	Lens Type	λ_d (nm)	Typ. I_v (mcd)	V_F (V)		I_F (mA)	Viewing Angle (º)
						Typ.	Max.		
6364/GADA-ANQA/P/MS	5.2x4.6x7.9	Green	Oval	525~535	3375	3.2	3.6	20	70 / 40
6364/GADA-AQSA/P/MS	5.2x4.6x7.9	Green	Oval	525~535	5375	3.2	3.6	20	70 / 40
6364/BADA-AHKA/P/MS	5.2x4.6x7.9	Blue	Oval	465~475	1070	3.2	3.6	20	70 / 40
6364/BADA-AKMA/P/MS	5.2x4.6x7.9	Blue	Oval	465~475	1425	3.2	3.6	20	70 / 40
6374/R7DA-AJKB/P/MS	5.2x4.6x7.9	Red	Oval	619~628	2240	2.0	2.6	20	65 / 40
6374/R7DA-AKMB/P/MS	5.2x4.6x7.9	Red	Oval	619~628	1425	2.0	2.6	20	65 / 40
6374/Y7DA-AJKB/P/MS	5.2x4.6x7.9	Yellow	Oval	586~594	2240	2.0	2.6	20	65 / 40
6374/Y7DA-ALNB/P/MS	5.2x4.6x7.9	Yellow	Oval	586~594	2137.5	2.0	2.6	20	65 / 40

Signage LED ▌Lamp Type LED ▌5mm Round Type

UNIT : mm

(With Stopper)

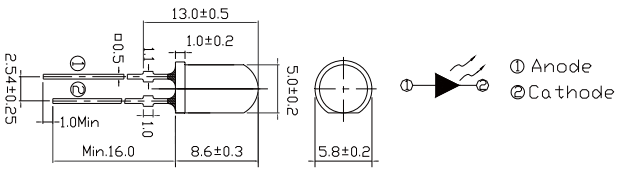

Product	Size (LxWxHmm)	Color	Lens Type	λ_d (nm)	Typ. I_v (mcd)	V_F (V)		I_F (mA)	Viewing Angle (º)
						Typ.	Max.		
333/R7C1-AUWB/P/MS	5.0x5.0x8.6	Red	Clear	619~628	11250	2.0	2.6	20	10
333/Y7C1-ATWB/P/MS	5.0x5.0x8.6	Yellow	Clear	586~594	12575	2.0	2.6	20	15
333/G1C1-AWYA/MS	5.0x5.0x8.6	Green	Clear	525~535	18000	3.2	3.6	20	15
333/B1C1-ARUA/MS	5.0x5.0x8.6	Blue	Clear	465~475	7150	3.2	3.6	20	15

UNIT : mm

(With Stopper)

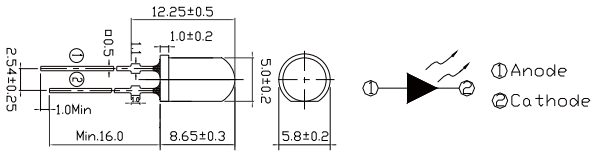

Product	Size (LxWxHmm)	Color	Lens Type	λ_d (nm)	Typ. I_v (mcd)	V_F (V)		I_F (mA)	Viewing Angle (º)
						Typ.	Max.		
7383/R7C3-AQSB/P/MS	5.0x5.0x8.7	Red	Clear	619~628	4000	2.0	2.6	20	30
7383/R7C3-ARUB/P/MS	5.0x5.0x8.7	Red	Clear	619~628	7150	2.0	2.6	20	30
7383/Y7C3-AQSB/P/MS	5.0x5.0x8.7	Yellow	Clear	586~594	4500	2.0	2.6	20	30
7383/Y7C3-ARUB/P/MS	5.0x5.0x8.7	Yellow	Clear	586~594	7150	2.0	2.6	20	30
7383/G1C3-ATVA/P/MS	5.0x5.0x8.7	Green	Clear	525~535	9000	3.2	3.6	20	30
7383/V7C3-ARTA/P/MS	5.0x5.0x8.7	Green	Clear	505	6300	3.2	3.6	20	30
7383/BAC3-ANQA/P/MS	5.0x5.0x8.7	Blue	Clear	465~475	3600	3.2	3.6	20	30
7343/R7D5-AHKB/P/MS	5.0x5.0x8.7	Red	Diffused	619~628	900	2.2	2.6	20	55
7343/GAD5-ANQA/P/MS	5.0x5.0x8.7	Green	Diffused	525~535	2850	3.2	3.6	20	50
7343/BAD5-AGJA/P/MS	5.0x5.0x8.7	Blue	Diffused	465~475	715	3.2	3.6	20	50
7343/R7C2-AQSB/P/MS	5.0x5.0x8.7	Red	Clear	619~628	4500	2.0	2.6	20	25
7343/Y7C2-AQSB/P/MS	5.0x5.0x8.7	Yellow	Clear	586~594	4500	2.0	2.6	20	25
7344/V7C2-ASVA/P/MS	5.0x5.0x8.7	Green	Clear	505	9000	3.2	3.6	20	23

Automotive LED ▌Exterior Application ▌High Power LED

UNIT : mm

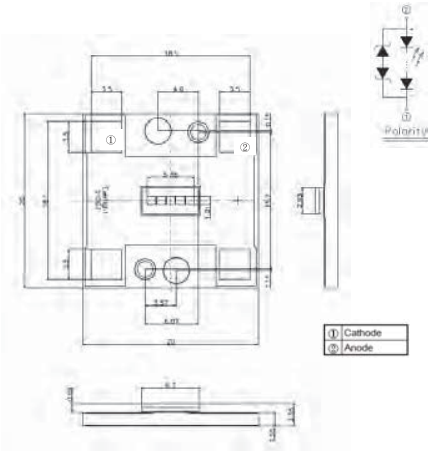

ALFS

Product	Size (LxWxHmm)	Color	CIE(K)	I_V Min. (lm)	I_V Max. (lm)	V_F Min. (V)	V_F Max. (V)	I_F (mA)	Viewing Angle (º)
*ALFSM5A-C710001H1-64D53AQ2Q8-1P-AM	20.0x20.0x2.55	○White	5180~6680K	1300	1800	14	18	1000	120
*ALFSM4A-C710001H1-64D53AP4P7-1P-AM	20.0x20.0x2.55	○White	5180~6680K	1000	1500	12	15	1000	120
*ALFSM3A-C710001H1-64D53AN9O7-1P-AM	20.0x20.0x2.55	○White	5180~6680K	700	1100	9	12	1000	120
*ALFSM2A-C710001H1-64D53AL7M7-1P-AM	20.0x20.0x2.55	○White	5180~6680K	450	700	6.3	7.5	1000	120

Star Mark*: Preliminary Product Availability; Please visti EVERLIGHT website for more updated information (www.everlight.com) or contact EVERLIGHT sales for regional options.

UNIT : mm

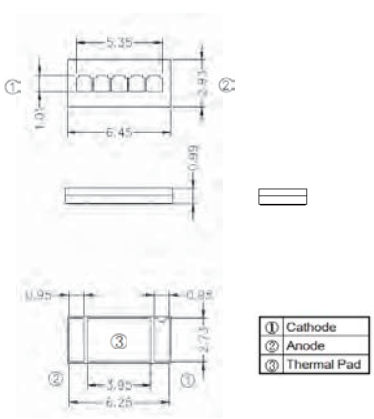

ALFS

Product	Size (LxWxHmm)	Color	CIE(K)	I_V Min. (lm)	I_V Max. (lm)	V_F Min. (V)	V_F Max. (V)	I_F (mA)	Viewing Angle (º)
*ALFS5A-C710001H1-64D53AQ2Q8-2T-AM	5.35x2.93x0.99	○White	5180~6680K	1300	1800	14	18	1000	120
*ALFS4A-C710001H1-64D53AP4P7-2T-AM	4.27x2.93x0.99	○White	5180~6680K	1100	1500	12	15	1000	120
*ALFS3A-C710001H1-64D53AN9O7-2T-AM	3.18x2.93x0.99	○White	5180~6680K	700	1100	9	12	1000	120
*ALFS2A-C710001H1-64D53AL7M7-2T-AM	3.70x2.93x0.99	○White	5180~6680K	450	700	6.3	7.5	1000	120

Star Mark*: Preliminary Product Availability; Please visti EVERLIGHT website for more updated information (www.everlight.com) or contact EVERLIGHT sales for regional options.

Automotive LED ▌Exterior Application ▌High Power LED

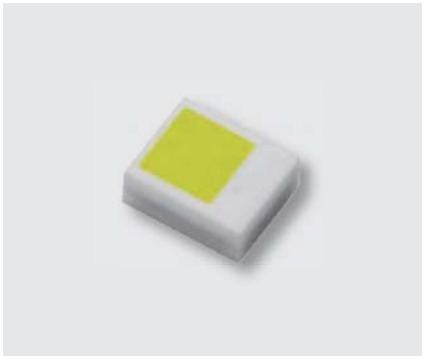

UNIT : mm

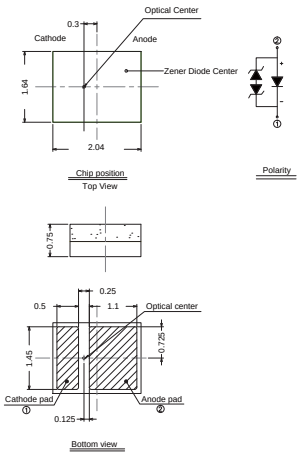

EL Compact 2016

Product	Size (LxWxHmm)	Color	λ_d (nm)/ CIE(K)	I_V Min. (lm)	I_V Max. (lm)	V_F Min. (V)	V_F Max. (V)	I_F (mA)	Viewing Angle (º)
CH2016-C07001H-53A64DJ6K23037-2T-AM	2.04x1.64x0.75	○White	5180~6680K	150	275	3.0	3.75	700	120
CH2016-UR7001H-1426F6J32133-2T-AM	2.04x1.64x0.75	●Red	615-627nm	60	120	2.25	3.0	700	130
CH2016-PA7001H-YAYBJ1J72941-2T-AM	2.04x1.64x0.75	●PC-Amber	Y1	100	180	3.0	3.75	700	130

UNIT : mm

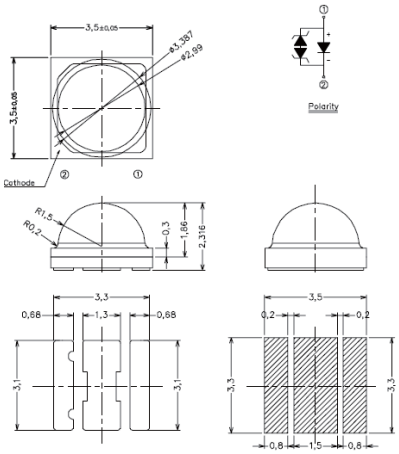

EL 3535E

Product	Size (LxWxHmm)	Color	λ_d (nm)/ CIE(K)	I_V Min. (lm)	I_V Max. (lm)	V_F Min. (V)	V_F Max. (V)	I_F (mA)	Viewing Angle (º)
*CH3535E-C03501H-53A64DF9J43040-2T-AM	3.5x3.3x2.316	○White	5180~6680K	90	140	3.0	4.0	350	120
*CH3535E-UR3501H-1020F6F71925-2T-AM	3.5x3.3x2.316	●Red	610~620nm	60	80	1.9	2.5	350	120
*CH3535E-PA3501H-YAYBF6F82535-2T-AM	3.5x3.3x2.316	●PC-Amber	YA,YB	60	90	2.5	3.5	350	120

Star Mark*: Preliminary Product Availability; Please visti EVERLIGHT website for more updated information (www.everlight.com) or contact EVERLIGHT sales for regional options.

Automotive LED ▌Exterior Application ▌High Power LED

UNIT : mm

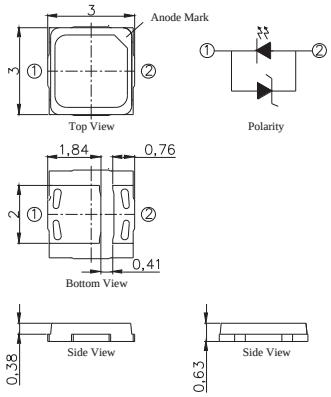

EL 3030E

Product	Size (LxWxHmm)	Color	λ_d (nm)/ CIE(K)	I_V Min. (lm)	I_V Max. (lm)	V_F Min. (V)	V_F Max. (V)	I_F (mA)	Viewing Angle (º)
XI3030-C03501H-53A64DJ1J62535-2T-AM	3.0x3.0x0.63	○White	5180~6680K	100	160	2.5	3.5	350	115
XI3030-UR3501H-0621F4F81730-2T-AM	3.0x3.0x0.63	●Red	614-626nm	45	80	1.75	3.0	350	120
XI3030-PA3501H-YAYBF5F92535-2T-AM	3.0x3.0x0.63	●PC-Amber	YA,YB	52	100	2.5	3.5	350	115

Automotive ▌Exterior Application ▌Mid Power LED

UNIT : mm

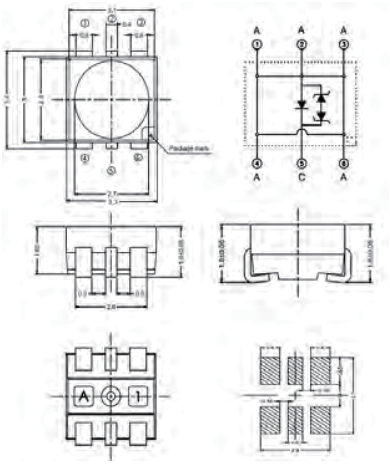

EL Advanced Power Top View

Product	Size (LxWxHmm)	Color	λ_d (nm)/ CIE(K)	I_V Min. (mcd)	I_V Max. (mcd)	V_F Min. (V)	V_F Max. (V)	I_F (mA)	Viewing Angle (º)
A09K-C71501H-53A64DEAFA2737-1T-AM	3.4x3.3x1.8	○White	5180~6680K	7100	14000	2.75	3.75	150	120
A09K-UR1501H-0921DAEA1727-1T-AM	3.4x3.3x1.8	●Red	609~621nm	4500	9000	1.75	2.75	150	120
A09K-SR1501H-2439CADB1727-1T-AM	3.4x3.3x1.8	●Super Red	624~639nm	2800	7100	1.75	2.75	150	120
A09K-UY1501H-8294CBDB1727-1T-AM	3.4x3.3x1.8	●Yellow	582~594nm	3550	7100	1.75	2.75	150	120
A09K-PA1501H-YAYBDBEB2737-1T-AM	3.4x3.3x1.8	●PC-Amber	X 0.57,Y 0.42	5600	11200	2.75	3.75	150	120

Automotive LED ▌Exterior Application ▌Low Power LED

UNIT : mm

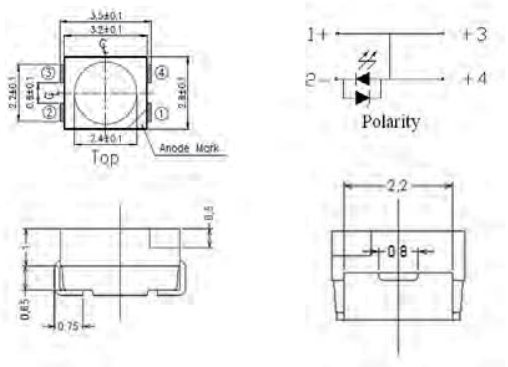

EL Power Top View PLCC-4

Product	Size (LxWxHmm)	Color	λ_d (nm)/ CIE(K)	I_V Min. (mcd)	I_V Max. (mcd)	V_F Min. (V)	V_F Max. (V)	I_F (mA)	Viewing Angle (º)
67-41-C70301H-53A64DBBCB2737-2T-AM	3.5x2.8x1.85	○White	5180~6680K	2240	4500	2.75	3.75	30	120
67-41-UR0501H-1224BACA1727-2T-AM	3.5x2.8x1.85	●Red	612~624nm	1800	3550	1.75	2.75	50	120
67-41-SR0501H-2436AAAB1727-2T-AM	3.5x2.8x1.85	●Super Red	624~636nm	1120	1800	1.75	2.75	50	120
67-41-UY0501H-8594ABBB1727-2T-AM	3.5x2.8x1.85	●Yellow	585~594nm	1400	2800	1.75	2.75	50	120

Star Mark*: Preliminary Product Availability; Please visti EVERLIGHT website for more updated information (www.everlight.com) or contact EVERLIGHT sales for regional options.

UNIT : mm

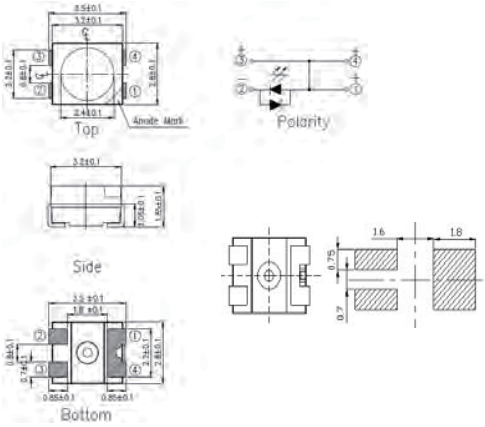

EL Power Top View PLCC-3

Product	Size (LxWxHmm)	Color	λ_d (nm)/ CIE(K)	I_V Min. (mcd)	I_V Max. (mcd)	V_F Min. (V)	V_F Max. (V)	I_F (mA)	Viewing Angle (º)
67-31-C70301H-53A64DBBCB2737-2T-AM	3.5x2.8x1.85	○White	5180~6680K	2240	4500	2.75	3.75	30	120
67-31-UR0501H-1224BACA1727-2T-AM	3.5x2.8x1.85	●Red	612~624nm	1800	3550	1.75	2.75	50	120
67-31-UY0501H-8594ABBB1727-2T-AM	3.5x2.8x1.85	●Yellow	585~594nm	1400	2800	1.75	2.75	50	120

Automotive LED ▌Exterior Application ▌Low Power LED

UNIT : mm

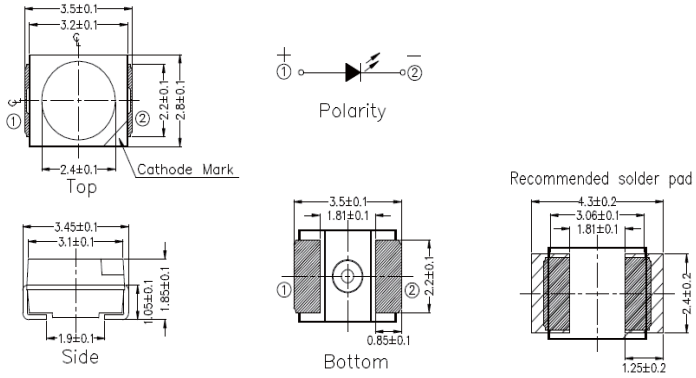

EL Top View

Product	Size (LxWxHmm)	Color	λ_d (nm)/CIE(K)	I_V Min. (mcd)	I_V Max. (mcd)	V_F Min. (V)	V_F Max. (V)	I_F (mA)	Viewing Angle (º)
67-11-C70201H-PM0FK0ABCA2737-2T-AM	3.5x2.8x1.85	White	X=0.227~0.365 Y=0.205~0.408	1120	2800	2.75	3.75	20	120
67-21-UR0201H-1224V1AA1727-2T-AM	3.5x2.8x1.85	Red	612~624nm	710	1400	1.75	2.75	20	120
67-21-UY0201H-8594V1AA1727-2T-AM	3.5x2.8x1.85	Yellow	585~594nm	710	1400	1.75	2.75	20	120

UNIT : mm

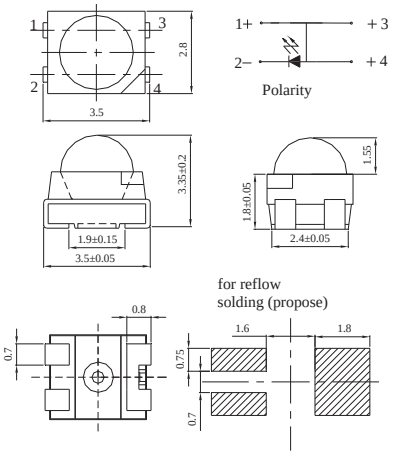

EL Top View Lens 60°

Product	Size (LxWxHmm)	Color	λ_d (nm)	I_V Min. (mcd)	I_V Max. (mcd)	V_F Min. (V)	V_F Max. (V)	I_F (mA)	Viewing Angle (º)
67-31EP6-UR0500H-1224CBEB1727-BT-AM	3.5x2.8x3.35	Red	612~624nm	3550	11200	1.75	2.75	50	60
67-31EP6-UY0500H-8294CAEA1727-BT-AM	3.5x2.8x3.35	Yellow	582~594nm	2800	9000	1.75	2.75	50	60

Automotive LED ▌Exterior Application ▌Low Power LED

EL Top View Lens 30°

UNIT : mm

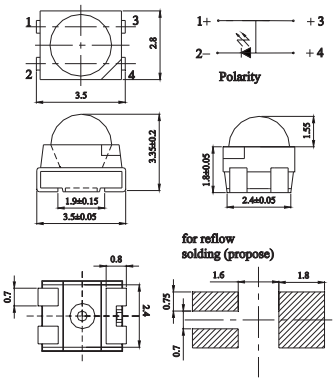

Product	Size (LxWxHmm)	Color	λ_d (nm)	I_V Min. (mcd)	I_V Max. (mcd)	V_F Min. (V)	V_F Max. (V)	I_F (mA)	Viewing Angle (º)
67-31EP3-UR0500H-1224DBFB1727-BT-AM	3.5x2.8x3.35	Red	612~624nm	5600	18000	1.75	2.75	50	30
67-31EP3-UY0500H-8294DBFB1727-BT-AM	3.5x2.8x3.35	Yellow	582~594nm	5600	18000	1.75	2.75	50	30

Automotive LED ▌Interior Application ▌Low Power LED

EL Top View 4014

UNIT : mm

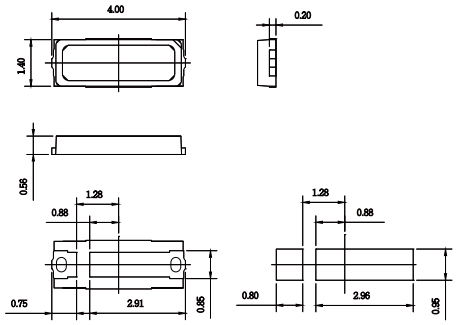

Product	Size (LxWxHmm)	Color	CIE(K)	I_V Min. (lm)	I_V Max. (lm)	V_F Min. (V)	V_F Max. (V)	I_F (mA)	Viewing Angle (º)
*50-315Z-C80600L-C3Q6A6C42735-2T-AM	4.0x1.4x0.63	White	X: 0.293 Y: 0.269	16	36	2.7	3.5	60	120

Star Mark*: Preliminary Product Availability; Please visti EVERLIGHT website for more updated information (www.everlight.com) or contact EVERLIGHT sales for regional options.

Automotive LED ▌Interior Application ▌Low Power LED

UNIT : mm

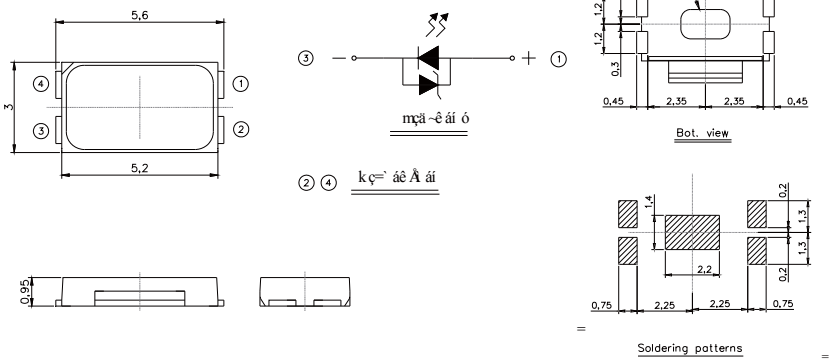

EL 5630B

Product	Size (LxWxHmm)	Color	CIE(K)	I_V Min. (lm)	I_V Max. (lm)	V_F Min. (V)	V_F Max. (V)	I_F (mA)	Viewing Angle (º)
62-117B-N81000L-38A46DB7E02735-2T-AM	5.6x3.0x0.95	○White	4000~4500K	27	55	2.75	3.5	100	120
62-117B-W81000L-25A36DB7E02735-2T-AM	5.6x3.0x0.95	○White	2700~3500K	27	55	2.75	3.5	100	120
62-117B-C81000L-48A68DB7E02735-2T-AM	5.6x3.0x0.95	○White	5000~6500K	27	55	2.75	3.5	100	120

UNIT : mm

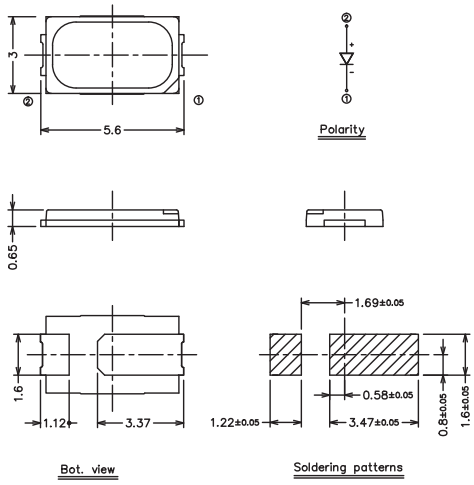

EL 5630D

Product	Size (LxWxHmm)	Color	CIE(K)	I_V Min. (lm)	I_V Max. (lm)	V_F Min. (V)	V_F Max. (V)	I_F (mA)	Viewing Angle (º)
*62-117D-W80650H-25A36DB4C52535-2T-AM	5.6x3.0x0.65	○White	2700~3500K	24	40	2.5	3.5	65	120
*62-117D-N80650H-38A46DB4C52535-2T-AM	5.6x3.0x0.65	○White	4000~4500K	24	40	2.5	3.5	65	120
*62-117D-C80650H-48A68DB4C52535-2T-AM	5.6x3.0x0.65	○White	5000~6500K	24	40	2.5	3.5	65	120

Star Mark*: Preliminary Product Availability; Please visti EVERLIGHT website for more updated information (www.everlight.com) or contact EVERLIGHT sales for regional options.

Automotive LED ▌Interior Application ▌Low Power LED

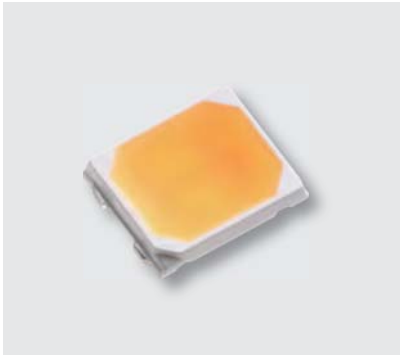

UNIT : mm

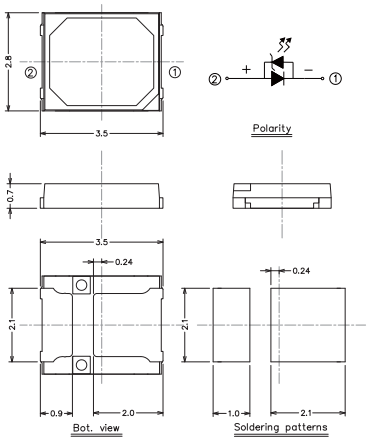

EL 2835

Product	Size (LxWxHmm)	Color	CIE(K)	I_V Min. (mcd)	I_V Max. (mcd)	V_F Min. (V)	V_F Max. (V)	I_F (mA)	Viewing Angle (º)
67-11S-N80600L-38A46DA2C02735-2T-AM	2.8x3.5x0.7	White	4000~4500K	12	35	2.75	3.5	60	120
67-11S-C80600L-48A68DA2C02735-2T-AM	2.8x3.5x0.7	White	5000~6500K	12	35	2.75	3.5	60	120
67-11S-W80600L-25A36DA2C02735-2T-AM	2.8x3.5x0.7	White	2700~3500K	12	35	2.75	3.5	60	120

UNIT : mm

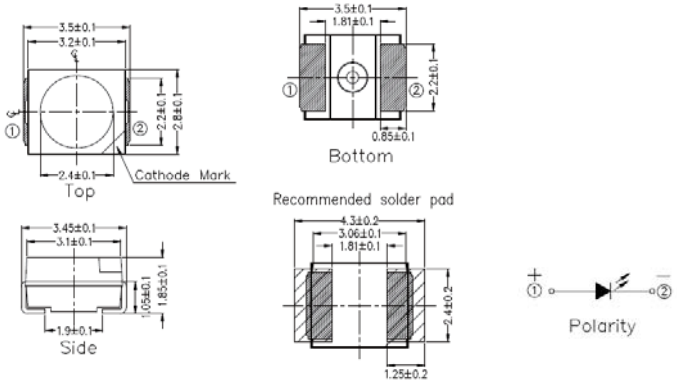

EL Top View

Product	Size (LxWxHmm)	Color	λ_d (nm)/ CCT(K)	I_V Min. (mcd)	I_V Max. (mcd)	V_F Min. (V)	V_F Max. (V)	I_F (mA)	Viewing Angle (º)
67-11-C70200H-PM0FK0ABCA2737-2T-AM	3.5x2.8x1.85	White	X=0.227~0.365 Y=0.205~0.408	1400	3550	2.75	3.75	20	120
67-11-IB0100L-CM5CA0S2U22737-2T-AM	3.5x2.8x1.85	Ice Blue	X=0.132~0.245 Y=0.117~0.360	224	710	2.75	3.75	10	120
67-11-SB0100L-JA16JA5S2U12737-2T-AM	3.5x2.8x1.85	Sky Blue	X=0.143~0.180 Y=0.055~0.109	224	560	2.75	3.75	10	120
67-11-UB0200H-6375S2U12737-2T-AM	3.5x2.8x1.85	Blue	463~475nm	224	560	2.75	3.75	20	120
67-11-UG0200H-2035V1AA2737-2T-AM	3.5x2.8x1.85	Green	520~535nm	710	1400	2.75	3.75	20	120
67-21-UR0200H-1827V1AA1727-2T-AM	3.5x2.8x1.85	Red	618~627nm	710	1400	1.75	2.75	20	120
67-21-UR0200L-1830R2T21727-2T-AM	3.5x2.8x1.85	Red	618~630nm	140	450	1.75	2.75	20	120
67-21-UY0200H-8594V1AA1727-2T-AM	3.5x2.8x1.85	Yellow	585~594nm	710	1400	1.75	2.75	20	120
67-21-UY0200L-8294R2T21727-2T-AM	3.5x2.8x1.85	Yellow	582~594nm	140	450	1.75	2.75	20	120

Automotive LED ▌Interior Application ▌Low Power LED

UNIT : mm

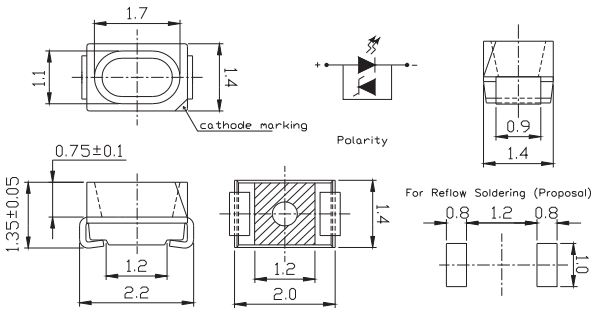

EL Mini Top View

Product	Size (LxWxHmm)	Color	λ_d (nm)/ CIE(K)	I_V Min. (mcd)	I_V Max. (mcd)	V_F Min. (V)	V_F Max. (V)	I_F (mA)	Viewing Angle (º)
65-11-C70200H-PM0FK0ABCA2737-2T-AM	2.2x1.4x1.35	White	X=0.227~0.365 Y=0.205~0.408	1400	3550	2.75	3.75	20	120
65-11-IB0100L-CM5CA0S2U22737-2T-AM	2.2x1.4x1.35	Ice Blue	X=0.132~0.245 Y=0.117~0.360	224	710	2.75	3.75	10	120
65-11-SB0100L-JA16JA5S2U12737-2T-AM	2.2x1.4x1.35	Sky Blue	X=0.143~0.180 Y=0.055~0.109	224	560	2.75	3.75	10	120
65-11-UB0200L-6375S2U12737-2T-AM	2.2x1.4x1.35	Blue	463~475nm	224	560	2.75	3.75	20	120
65-11-UG0200H-2035V1AA2737-2T-AM	2.2x1.4x1.35	Green	520~535nm	710	1400	2.75	3.75	20	120
65-21-UR0200H-1827V1AA1727-2T-AM	2.2x1.4x1.35	Red	618~627nm	710	1400	1.75	2.75	20	120
65-21-UY0200H-8594V1AA1727-2T-AM	2.2x1.4x1.35	Yellow	585~594nm	710	1400	1.75	2.75	20	120

Automotive LED ▌Interior Application ▌Low Power LED

UNIT : mm

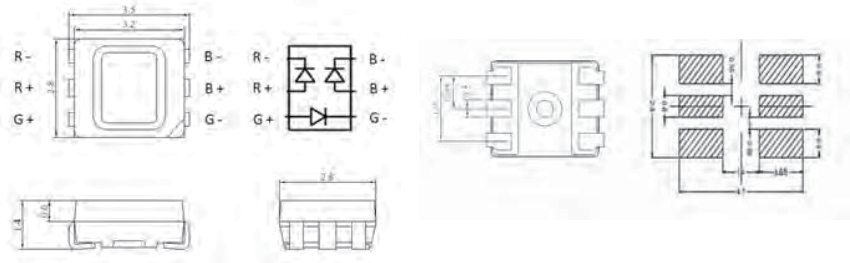

EL Top View RGB

Product	Size (LxWxHmm)	Color	λ_d (nm)	I_V Min. (mcd)	I_V Max. (mcd)	V_F Min. (V)	V_F Max. (V)	I_F (mA)	Viewing Angle (°)
67-63-RGB0201H-A00-2T-AM	3.5x2.8x1.4	Red Green Blue	621~636nm 520~535nm 447~471nm	560 1120 180	1120 2240 450	1.75 2.75 2.75	2.75 3.75 3.75	20	120

Star Mark*: Preliminary Product Availability; Please visti EVERLIGHT website for more updated information (www.everlight.com) or contact EVERLIGHT sales for regional options.

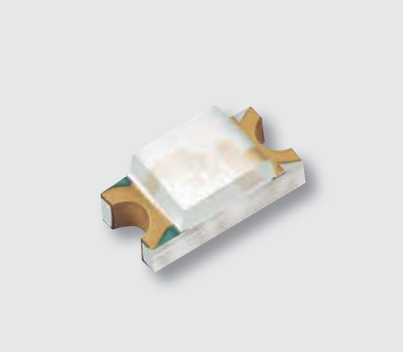

UNIT : mm

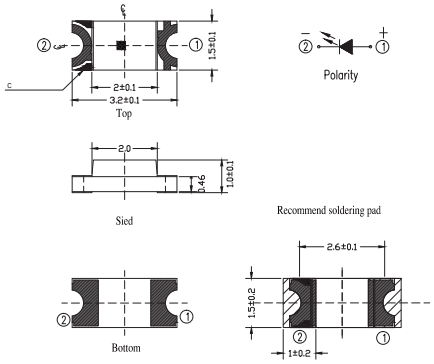

1206

Product	Size (LxWxHmm)	Color	λ_d (nm)	Iv Min. (mcd)	I_V Max. (mcd)	V_F Min.(V)	V_F Max. (V)	I_F (mA)	Viewing Angle (°)
15-21-G6C-A0N1P2B0E-2T-AM	3.2x1.5x1.0	Yellow Green	569.5~577.5nm	28	71	1.75	2.35	20	130
15-21-R6C-B0Q1R2B0E-2T8-AM	3.2x1.5x1.0	Red	617.5~629.5nm	71	180	1.75	2.35	20	130
15-21-Y2SC-A0S1T1B25E-2T-AM	3.2x1.5x1.0	Yellow	585.5~594.5nm	180	355	1.7	2.4	20	130

Automotive LED ▌Interior Application ▌Low Power LED

UNIT : mm

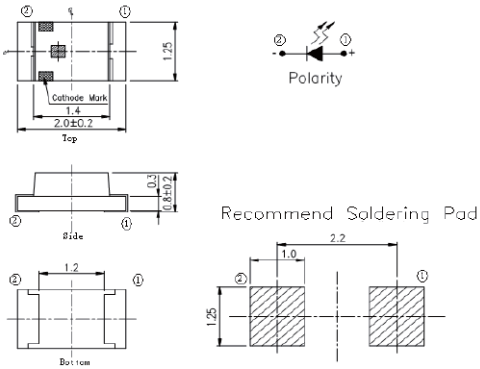

0805

Product	Size (LxWxHmm)	Color	λ_d (nm)	I_V Min. (mcd)	I_V Max. (mcd)	V_F Min. (V)	V_F Max. (V)	I_F (mA)	Viewing Angle (º)
17-215-G6C-F5M1N2B0E-3T-AM	2.0x1.25x0.8	Yellow Green	568~574nm	18	45	1.75	2.35	20	130
17-215-R6C-A0Q2R2B0E-3T-AM	2.0x1.25x0.8	Red	617.5~633.5nm	90	180	1.75	2.35	20	130
17-215-S3C-5UQ2R2B0E-3T-AM	2.0x1.25x0.8	Orange	611~619nm	90	180	1.75	2.35	20	130
17-215-Y2C-P9Q2S1B0E-3T-AM	2.0x1.25x0.8	Yellow	584~596nm	90	224	1.75	2.35	20	130

UNIT : mm

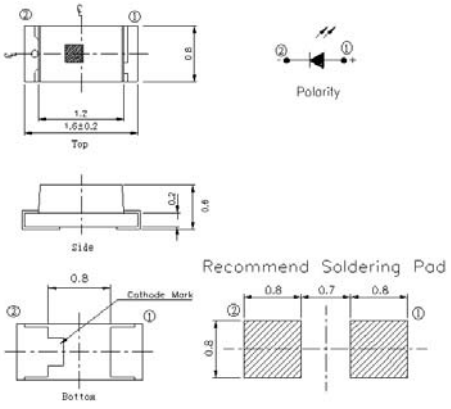

0603

Product	Size (LxWxHmm)	Color	λ_d (nm)	I_V Min. (mcd)	I_V Max. (mcd)	V_F Min. (V)	V_F Max. (V)	I_F (mA)	Viewing Angle (º)
19-213-G6SC-M0P1Q1B0E-3T-AM	1.6x0.8x0.6	Yellow Green	569.5~575.5nm	45	90	1.75	2.35	20	120
19-213-R6C-A0R2S2B0E-3T-AM	1.6x0.8x0.6	Red	617.5~633.5nm	140	280	1.75	2.35	20	120
19-213-S3SC-B0S1T1B0E-3T-AM	1.6x0.8x0.6	Orange	613.5~621.5nm	180	355	1.75	2.35	20	120
19-213-Y2SC-9AS1T1B0E-3T-AM	1.6x0.8x0.6	Yellow	589~595nm	180	355	1.75	2.35	20	120

Backlighting LED ▌TV/Monitor

Application/ TFT Edge

UNIT : mm

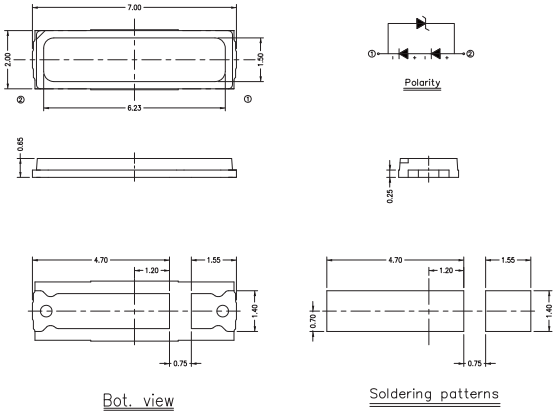

7020

Product	Size (LxWxHmm)	Color	Power(W)	CIE(x,y)	Iv (lm)	VF (V)	Viewing Angle(°)
62-129PUHFC/T94104N47S9C-T	7.0x2.0x0.65	○ White	1	(0.2647, 0.2341)	99~123	6.2~6.8	120

UNIT : mm

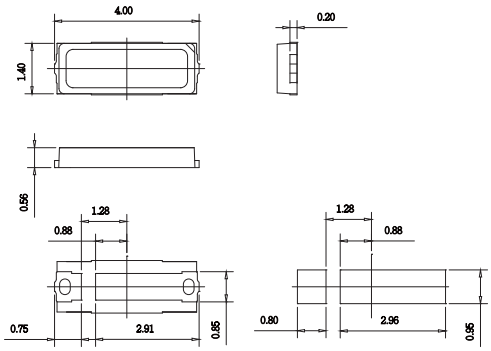

4014

Product	Size (LxWxHmm)	Color	Power(W)	CIE(x,y)	Iv (lm)	VF (V)	Viewing Angle(°)
50-615PHFC/7175M46S8C/TR8-T	4.0x1.4x0.6	○ White	0.8	(0.2647, 0.2341)	70~83	5.8~6.4	120

Backlighting LED ITV/Monitor

Application/ TFT Edge

UNIT : mm

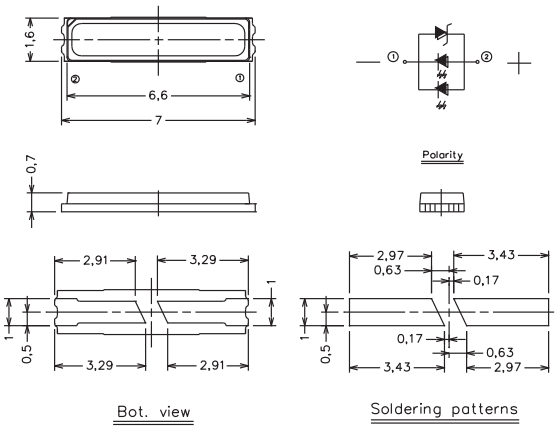

7016

Product	Size (LxWxHmm)	Color	Power(W)	CIE(x,y)	Iv (lm)	VF (V)	Viewing Angle(°)
62-125UHBC/T7987ZM8AP9E/TR8-T	7.0x1.6x0.7	○White	0.9	(0.2647,0.2341)	76-91	2.8-3.4	120

UNIT : mm

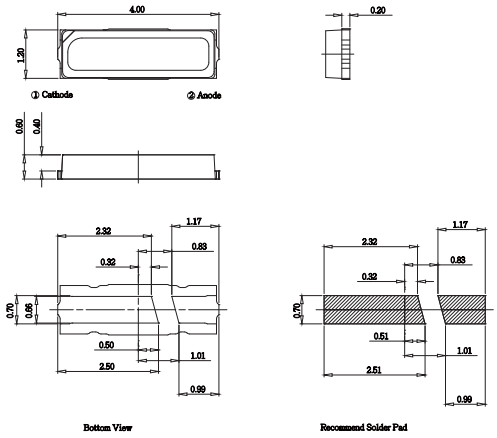

4012

Product	Size (LxWxHmm)	Color	Power(W)	CIE(x,y)	Iv (lm)	VF (V)	Viewing Angle(°)
50-515UMRFC/1620M468C/TR8-T	4.0x1.2x0.6	○White	0.18	(0.2647.0.2341)	16-24	2.7-3.4	120

Backlighting LED ▌TV/Monitor

Application/ TFT Edge

UNIT : mm

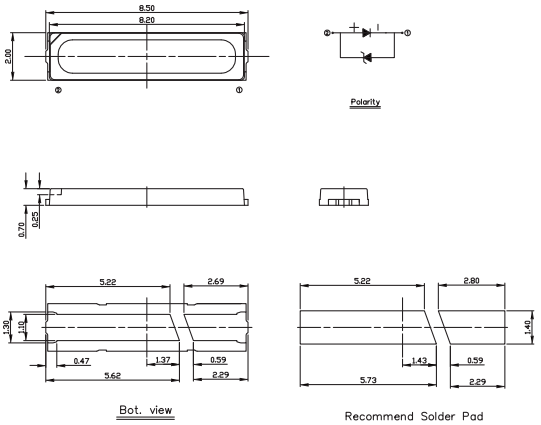

8520

Product	Size (LxWxHmm)	Color	Power(W)	CIE(x,y)	Iv (lm)	VF (V)	Viewing Angle(°)
62-112UHFC/2227J4E3H9C/TR8-T	8.5x2.0x0.7	○White	0.25	(0.2647,0.2341)	20-28	2.8-3.2	120

UNIT : mm

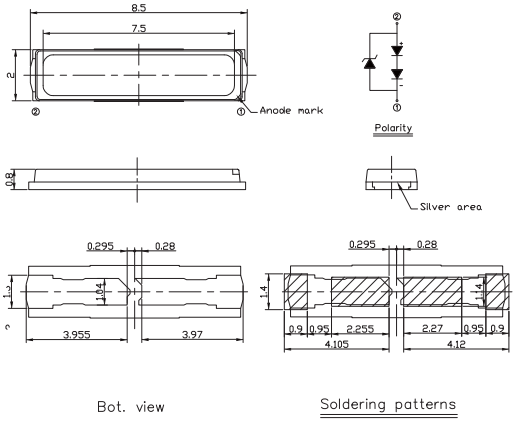

8520

Product	Size (LxWxHmm)	Color	Power(W)	CIE(x,y)	Iv (lm)	VF (V)	Viewing Angle(°)
62-122UMRIC/3338LM58P8C/TR8-T	8.5x2.0x0.8	○White	0.32	(0.2647,0.2341)	34-43	2.7-3.2	120

Backlighting LED ITV/Monitor

Application/ TFT Direct

UNIT : mm

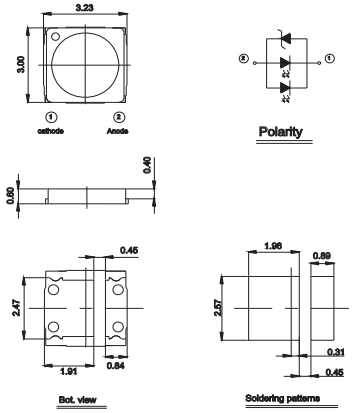

3030 2.5∅

Product	Size (LxWxHmm)	Color	Power(W)	CIE(x,y)	Iv (lm)	VF (V)	Viewing Angle(°)
62-123PAUN3W/F120135VM68PBD-T	3.0x3.0x0.6	○White	1.3	(0.2735,0.2293)	120-150	3.0-3.45	120

UNIT : mm

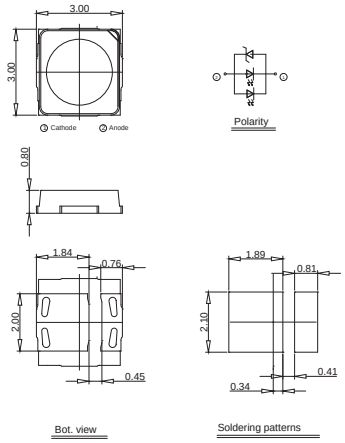

3030 2.3∅

Product	Size (LxWxHmm)	Color	Power(W)	CIE(x,y)	Iv (lm)	VF (V)	Viewing Angle(°)
62-113PUN2C/F90115ZN57DH-T	3.0x3.0x0.8	○White	1.4	(0.2735,0.2293)	90-130	3.2-3.8	120

Backlighting LED I TV/Monitor

Application/TFT Direct

UNIT : mm

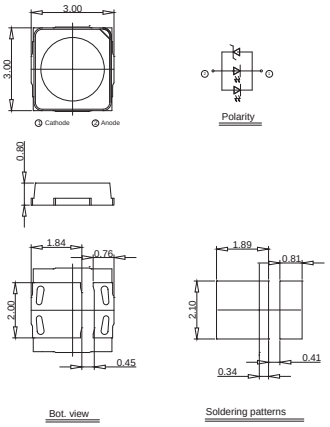

3030 2.3∅

Product	Size (LxWxHmm)	Color	Power(W)	CIE(x,y)	Iv (lm)	VF (V)	Viewing Angle(°)
62-223PUNC/F125150ZM35SBE-T	3.0x3.0x0.8	○White	1.8	(0.2735,0.2293)	125-165	6.4-7.2	120

UNIT : mm

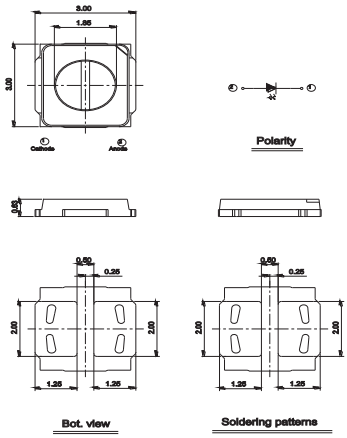

3030FC 1.8∅

Product	Size (LxWxHmm)	Color	Power(W)	CIE(x,y)	Iv (lm)	VF (V)	Viewing Angle(°)
S3030FPBUD2C/F120145N37BF-T	3.0x3.0x0.63	○White	1.65	(0.2735,0.2293)	120-160	3.0-3.6	120

Backlighting LED ▌Portable

Application/ Side View

UNIT : mm

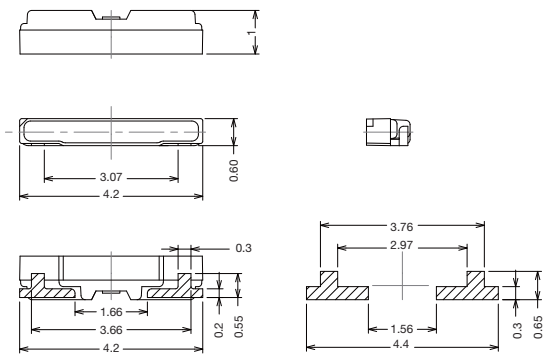

Product	Size (LxWxHmm)	Color	Power(W)	CIE(x,y)	Iv (lm)	VF (V)	Viewing Angle(°)
99-826LM2C/TR8-T	4.2x1x0.6	White	0.12	X=0.295,Y=0.28	14-17	5.4-6.8	120

UNIT : mm

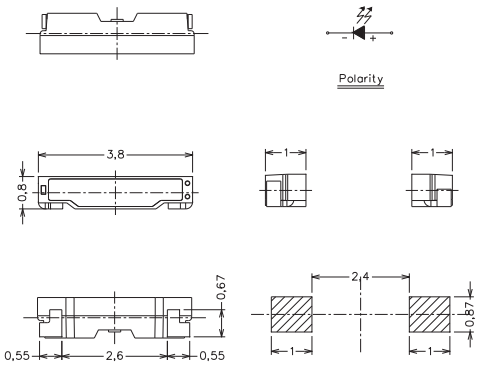

Product	Size (LxWxHmm)	Color	Power(W)	CIE(x,y)	Iv (lm)	VF (V)	Viewing Angle(°)
99-713LM2C/TR8-T	3.8x1.0x0.8	White	0.06	X=0.295,Y=0.28	7.75-8.5	2.7-3.4	120

UNIT : mm

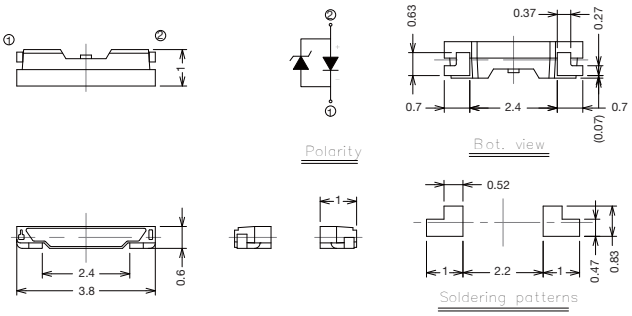

Product	Size (LxWxHmm)	Color	Power(W)	CIE(x,y)	Iv (lm)	VF (V)	Viewing Angle(°)
99-616LM2C/TR8-T	3.8x1.0x0.6	White	0.06	X=0.295,Y=0.28	8.75-9.25	2.9-3.4	120

Backlighting LED ▌ Portable

Application/ Side View

UNIT : mm

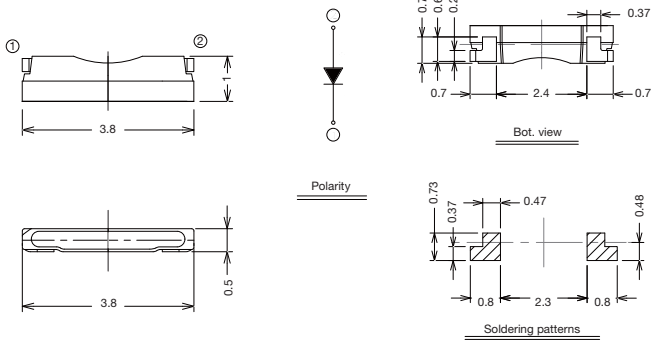

Product	Size (LxWxHmm)	Color	Power(W)	CIE(x,y)	Iv (lm)	VF (V)	Viewing Angle(°)
3805AUM2C/TR8-T	3.8x1.0x0.5	White	0.06	X=0.295,Y=0.28	8.25-9.0	2.7-3.4	116

UNIT : mm

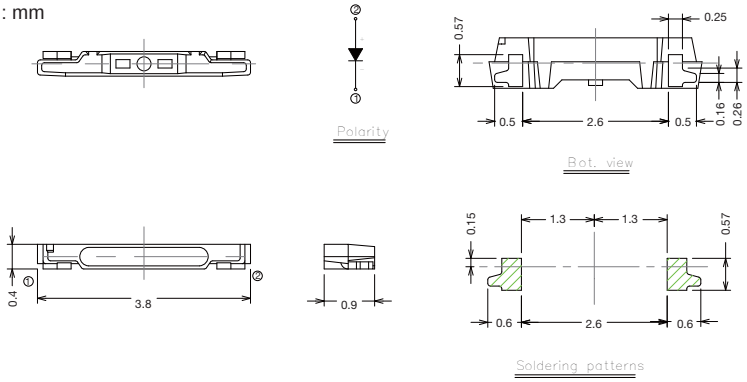

Product	Size (LxWxHmm)	Color	Power(W)	CIE(x,y)	Iv (lm)	VF (V)	Viewing Angle(°)
99-218GUM2C/TR8-T	3.8x0.9x0.4	White	0.06	X=0.295,Y=0.28	8.0-8.75	2.7-3.4	120

UNIT : mm

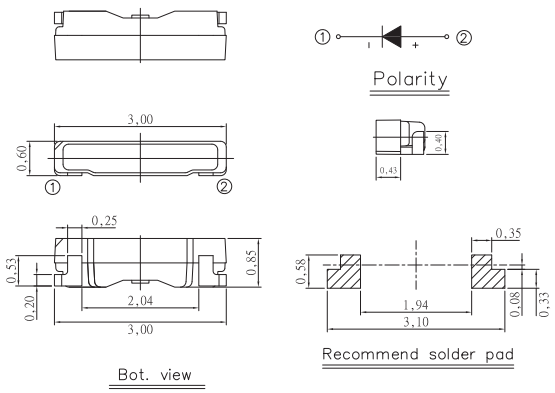

Product	Size (LxWxHmm)	Color	Power(W)	CIE(x,y)	Iv (lm)	VF (V)	Viewing Angle(°)
3006UM2C/TR8-T	3.0x0.85x0.6	White	0.06	X=0.295,Y=0.28	8.0-8.5	2.9-3.4	120

Backlighting LED ▌Portable

Application/ Side View

UNIT : mm

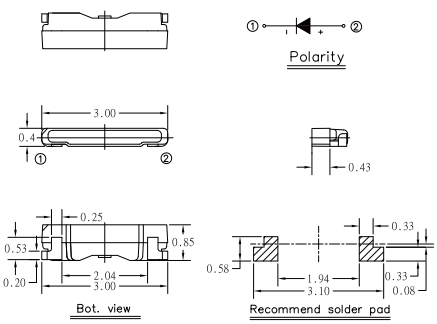

Product	Size (LxWxHmm)	Color	Power(W)	CIE(x,y)	Iv (lm)	VF (V)	Viewing Angle(°)
3004UM2C/TR8-T	3.0x0.85x0.4	White	0.06	X=0.295,Y=0.28	7.75-8.5	2.7-3.4	115

UNIT : mm

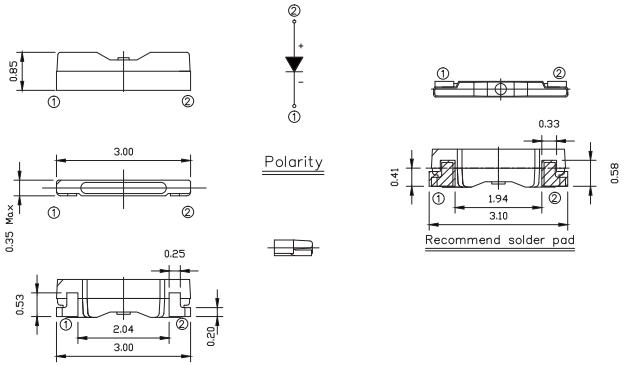

Product	Size (LxWxHmm)	Color	Power(W)	CIE(x,y)	Iv (lm)	VF (V)	Viewing Angle(°)
3003UM2C/TR8-T	3.0x0.85x0.3	White	0.06	X=0.295,Y=0.28	6.5-70	2.9-3.4	120

INFRARED LED, SENSORS, COUPLERS

174 INFRARED LED AND SILICON DETECTOR

207 INFRARED RECEIVER MODULE

217 OPTIC-FIBER DEVICE (PHOTO LINK)

226 OPTICAL SENSOR

243 PHOTO COUPLER

Infrared LED and Silicon Detector ▌Emitter ▌Lamp 3mm

UNIT : mm

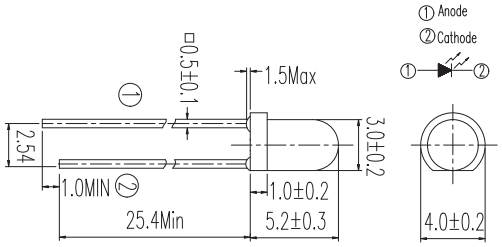

Product	Size (mm)	λ_P (nm)	V_F Typ (V)	V_F Max (V)	Ie_Min (mW/sr)	Ie_Typ (mW/sr)	Viewing Angle (º)
HIR204	3	850	1.45	1.65	7.8	17.6	25
HIR204/H0	3	850	1.45	1.65	4	8.9	40
HIR204C	3	850	1.45	1.65	7.8	17.6	25
HIR204C/H0	3	850	1.45	1.65	11	20	40
IR204-A	3	940	1.2	1.5	4	5.6	35
IR204/H16/L10	3	940	1.2	1.5	4	8	50
IR204/H60	3	940	1.2	1.5	4	7	50
IR204C-A	3	940	1.2	1.5	4	7.8	40
IR204C/H16/L10	3	940	1.2	1.5	2.8	5	50
SIR204-A	3	875	1.3	1.6	4	6.4	30
SIR204C	3	875	1.3	1.6	4	6.4	30

UNIT : mm

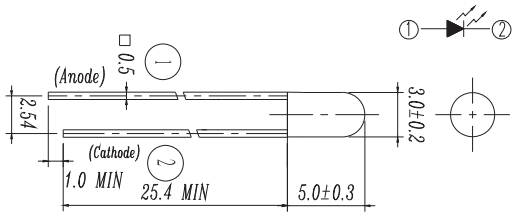

Product	Size (mm)	λ_P (nm)	V_F Typ (V)	V_F Max (V)	Ie_Min (mW/sr)	Ie_Typ (mW/sr)	Viewing Angle (º)
SIR234	3	875	1.3	1.6	5.6	9.3	30
HIR234C	3	850	1.45	1.65	7.8	15	30

Infrared LED and Silicon Detector ▌Emitter ▌Lamp 5mm

UNIT : mm

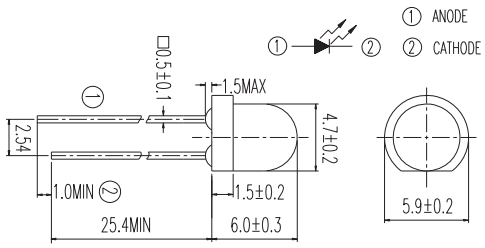

Product	Size (mm)	λ_P (nm)	V_F Typ (V)	V_F Max (V)	Ie_Min (mW/sr)	Ie_Typ (mW/sr)	Viewing Angle (º)
HIR323C	5	850	1.45	1.65	15	30	15
HIR323C/H0	5	850	1.45	1.65	7.8	11	30
IR323	5	940	1.2	1.5	5.6	7.8	30
IR323/H0-A	5	940	1.2	1.5	2	3.5	60
SIR323-5	5	875	1.3	1.65	4	7.8	35

UNIT : mm

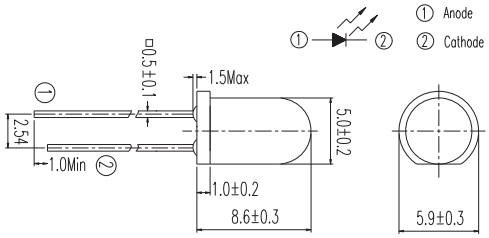

Product	Size (mm)	λ_P (nm)	V_F Typ (V)	V_F Max (V)	Ie_Min (mW/sr)	Ie_Typ (mW/sr)	Viewing Angle (º)
HIR333/H0	5	850	1.45	1.65	7.8	15	30
HIR333C/H0	5	850	1.45	1.65	7.8	15	30
IR333-A	5	940	1.2	1.5	7.8	20	20
IR333/H0	5	940	1.2	1.5	5.6	7.8	40
IR333/H0/L10	5	940	1.2	1.5	11	20	40
IR333C	5	940	1.2	1.5	7.8	15	20
IR333C/H0/L10	5	940	1.2	1.5	7.8	10	40
IR333C/H2	5	940	1.2	1.5	7.8	15	30
SIR333-A	5	875	1.3	1.65	7.8	20	20

UNIT : mm

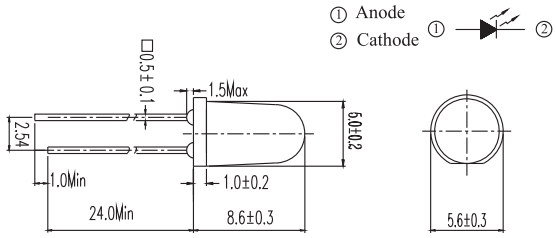

Product	Size (mm)	λ_P (nm)	V_F Typ (V)	V_F Max (V)	Ie_Min (mW/sr)	Ie_Typ (mW/sr)	Viewing Angle (º)
IR383	5	940	1.2	1.5	15	20	20
SIR383C	5	875	1.3	1.6	11	20	20
HIR383C/L289	5	850	1.45	1.65	--	140	18

Infrared LED and Silicon Detector ❙ Emitter ❙ Lamp 5mm

UNIT : mm

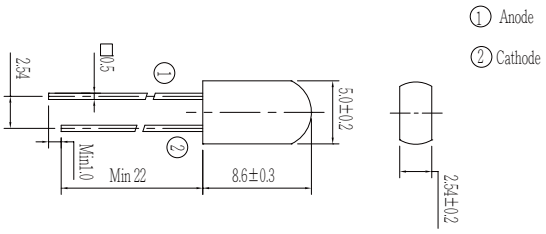

Product	Size (mm)	λ_P (nm)	V_F Typ (V)	V_F Max (V)	Ie_Min (mW/sr)	Ie_Typ (mW/sr)	Viewing Angle (º)
IR533C	5	940	1.2	1.5	4	7.8	25

UNIT : mm

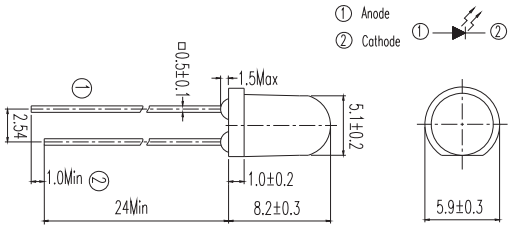

Product	Size (mm)	λ_P (nm)	V_F Typ (V)	V_F Max (V)	Ie_Min (mW/sr)	Ie_Typ (mW/sr)	Viewing Angle (º)
HIR7373B/L289	5	850	1.45	1.6	21	40	25
HIR7373C	5	850	1.45	1.65	7.8	15	40
IR7373C	5	940	1.2	1.5	5.6	12	45

UNIT : mm

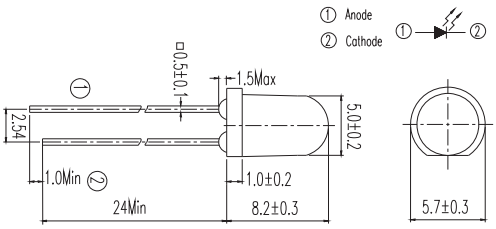

Product	Size (mm)	λ_P (nm)	V_F Typ (V)	V_F Max (V)	Ie_Min (mW/sr)	Ie_Typ (mW/sr)	Viewing Angle (º)
HIR7393B/L289	5	850	1.45	1.6	7.8	20	50
HIR7393C	5	850	1.45	1.65	7.8	15	45
IR7393C	5	940	1.2	1.5	4	6.5	55

Infrared LED and Silicon Detector ❙ Emitter ❙ Lamp 5mm

UNIT : mm

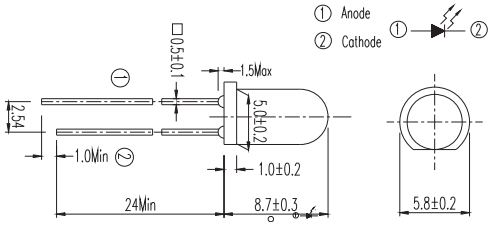

Product	Size (mm)	λ_P (nm)	V_F Typ (V)	V_F Max (V)	Ie_Min (mW/sr)	Ie_Typ (mW/sr)	Viewing Angle (º)
HIR8323/C16	5	850	1.45	1.65	20	30	30

UNIT : mm

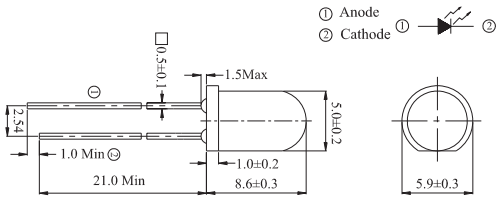

Product	Size (mm)	λ_P (nm)	V_F Typ (V)	V_F Max (V)	Ie_Min (mW/sr)	Ie_Typ (mW/sr)	Viewing Angle (º)
IR8353-14C	5	940	1.2	1.5	7.8	11	27~43

UNIT : mm

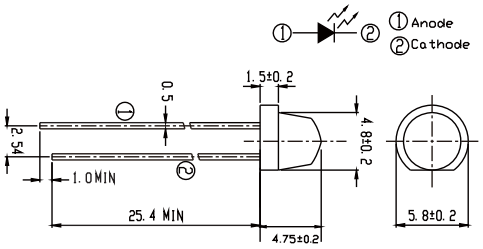

Product	Size (mm)	λ_P (nm)	V_F Typ (V)	V_F Max (V)	Ie_Min (mW/sr)	Ie_Typ (mW/sr)	Viewing Angle (º)
HIR7323C/L599	5	850	1.4@50mA	1.7@50mA	10@50mA	13@50mA	75

Infrared LED and Silicon Detector ❙ Emitter ❙ Lamp 5mm

UNIT : mm

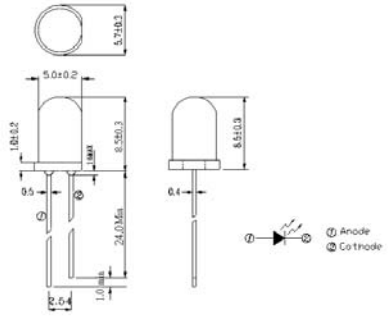

Product	Size (mm)	λ_P (nm)	V_F Typ (V)	V_F Max (V)	Ie_Min (mW/sr)	Ie_Typ (mW/sr)	Viewing Angle (º)
IR8394-20C	5	940	1.2	1.5	2.8	5	60

UNIT : mm

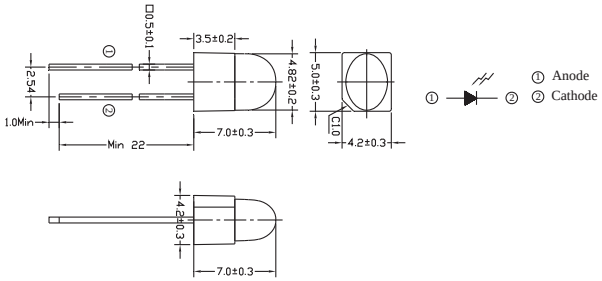

Product	Size (mm)	λ_P (nm)	V_F Typ (V)	V_F Max (V)	Ie_Min (mW/sr)	Ie_Typ (mW/sr)	Viewing Angle (º)
IR5443-14C/L527	5	940	1.2	1.5	4	9	60(X)30(Y)

Infrared LED and Silicon Detector ❙ Emitter ❙ Piranha

UNIT : mm

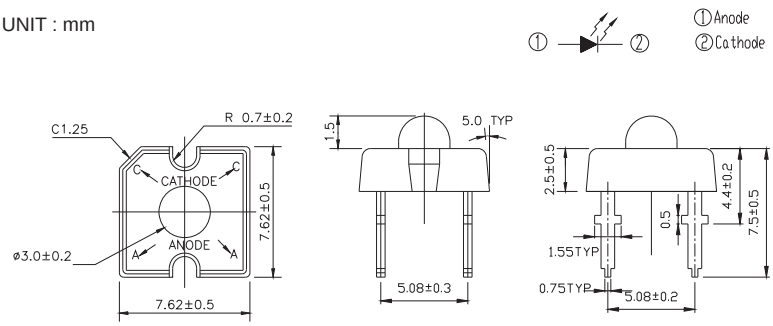

Product	Size (LxWxHmm)	λ_P (nm)	V_F Typ (V)	V_F Max (V)	Ie_Min (mW/sr)	Ie_Typ (mW/sr)	Viewing Angle (º)
HIR30-01C/S16	7.62x7.62x4	850	1.45	1.65	5.6	10	35

UNIT : mm

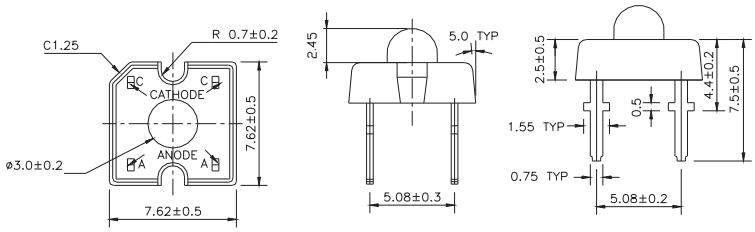

Product	Size (LxWxHmm)	λ_P (nm)	V_F Typ (V)	V_F Max (V)	Ie_Min (mW/sr)	Ie_Typ (mW/sr)	Viewing Angle (º)
HIR36-01C/S32	7.62x7.62x5	850	1.45	1.65	15	29	20

UNIT : mm

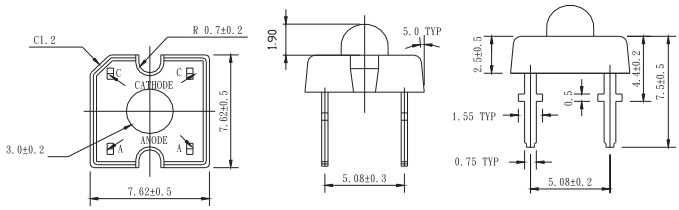

Product	Size (LxWxHmm)	λ_P (nm)	V_F Typ (V)	V_F Max (V)	Ie_Min (mW/sr)	Ie_Typ (mW/sr)	Viewing Angle (º)
HIR38-01C	7.62x7.62x4.4	850	1.45	1.65	7.8	17	30

Infrared LED and Silicon Detector ▌Emitter ▌Side Look

UNIT : mm

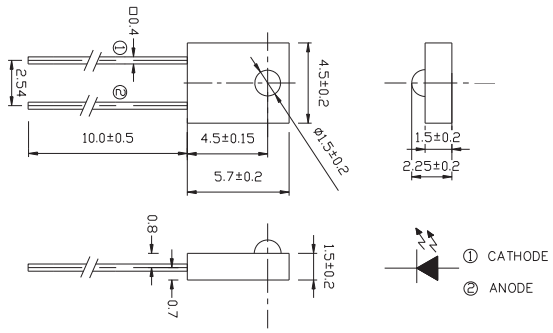

Product	Size (LxWxHmm)	λ_P (nm)	V_F Typ (V)	V_F Max (V)	Ie_Min (mW/sr)	Ie_Typ (mW/sr)	Viewing Angle (º)
IR908-7C-F	4.5x2.25x5.7	940	1.2	1.5	--	--	60

UNIT : mm

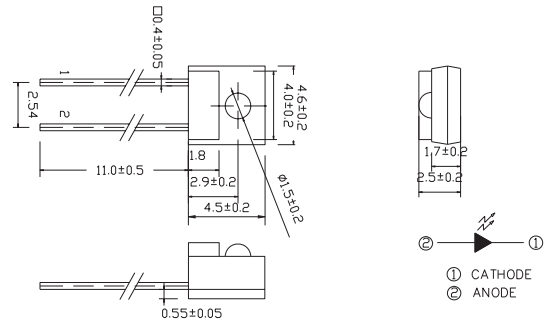

Product	Size (LxWxHmm)	λ_P (nm)	V_F Typ (V)	V_F Max (V)	Ie_Min (mW/sr)	Ie_Typ (mW/sr)	Viewing Angle (º)
IR928-6C-F	4.6x2.5x4.5	940	1.2	1.5	--	--	40

UNIT : mm

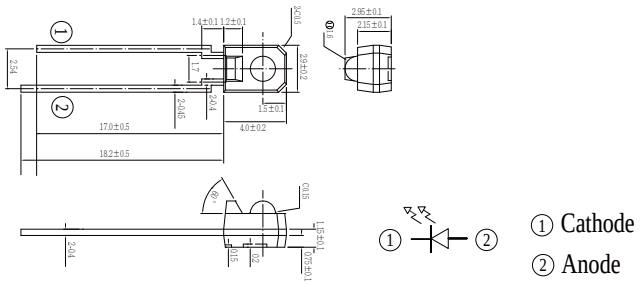

Product	Size (LxWxHmm)	λ_P (nm)	V_F Typ (V)	V_F Max (V)	Ie_Min (mW/sr)	Ie_Typ (mW/sr)	Viewing Angle (º)
IR968-8C	2.9x2.9x4	940	1.2	1.5	--	--	25

Infrared LED and Silicon Detector ▌Emitter ▌SMD

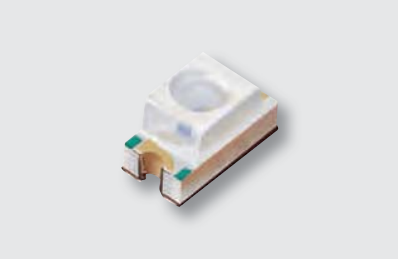

UNIT : mm

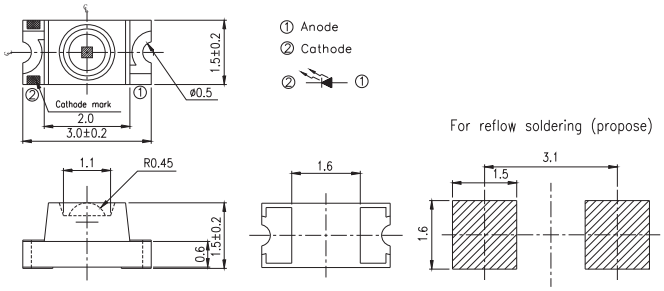

Product	Size (LxWxHmm)	λ_P (nm)	V_F Typ (V)	V_F Max (V)	Ie_Min (mW/sr)	Ie_Typ (mW/sr)	Viewing Angle (º)
IR11-21C/TR8	3x1.5x1.5	940	1.2	1.5	0.5	1.6	100
IR11-21C/L491/TR8	3x1.5x1.5	940	1.3	1.7	1.0	4.0	80
HIR11-21C/L11/TR8	3x1.5x1.5	850	1.45	1.65	1	2	75
SIR11-21C/L294/TR8	3x1.5x1.5	870	1.4	1.5	1.3	2.6	100

UNIT : mm

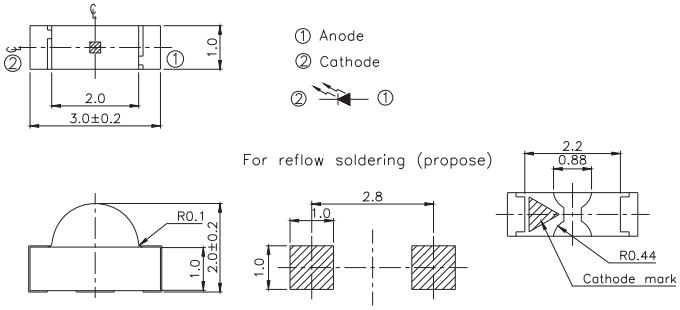

Product	Size (LxWxHmm)	λ_P (nm)	V_F Typ (V)	V_F Max (V)	Ie_Min (mW/sr)	Ie_Typ (mW/sr)	Viewing Angle (º)
IR12-21C/TR8	3x1x2	940	1.2	1.5	0.5	0.8	160
SIR12-21C/TR8	3x1x2	875	1.3	1.6	0.5	0.9	160
HIR12-21C/TR8	3x1x2	850	1.45	1.65	0.7	1.3	145

UNIT : mm

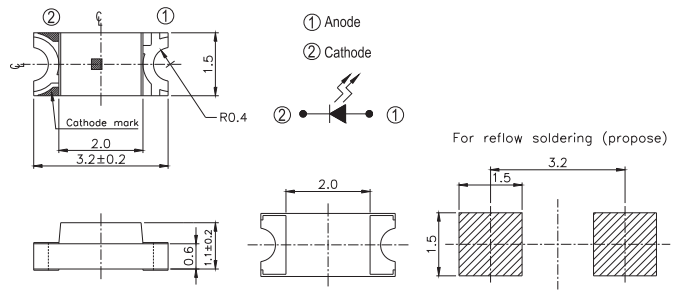

Product	Size (LxWxHmm)	λ_P (nm)	V_F Typ (V)	V_F Max (V)	Ie_Min (mW/sr)	Ie_Typ (mW/sr)	Viewing Angle (º)
HIR15-21C/TR8	3.2x1.5x1.1	850	1.45	1.65	0.5	1.5	150
IR15-21C/TR8	3.2x1.5x1.1	940	1.2	1.5	0.2	0.8	160

Infrared LED and Silicon Detector ▌Emitter ▌SMD

UNIT : mm

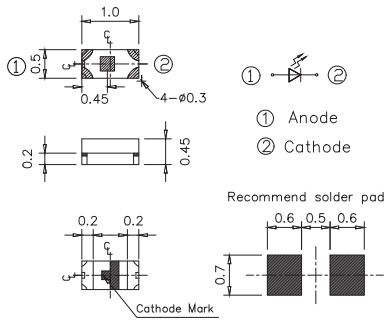

Product	Size (LxWxHmm)	λ_P (nm)	V_F Typ (V)	V_F Max (V)	Ie_Min (mW/sr)	Ie_Typ (mW/sr)	Viewing Angle (º)
IR16-213C/L510/TR8	1x0.5x0.45	940	1.5	1.9	0.5	2.35	120

UNIT : mm

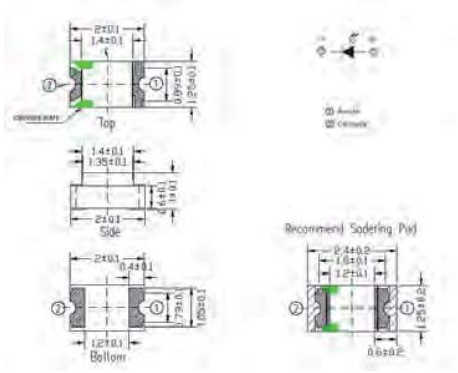

Product	Size (LxWxHmm)	λ_P (nm)	V_F Typ (V)	V_F Max (V)	Ie_Min (mW/sr)	Ie_Typ (mW/sr)	Viewing Angle (º)
IR17-21C/TR8	2x1.25x1.0	940	1.2	1.5	0.2	0.8	120
HIR17-21C/TR8	2x1.25x1.0	850	1.45	1.65	0.5	2	120
HIR17-21C/L289/TR8	2x1.25x1.0	850	1.4	1.7	1.6	2.1	120

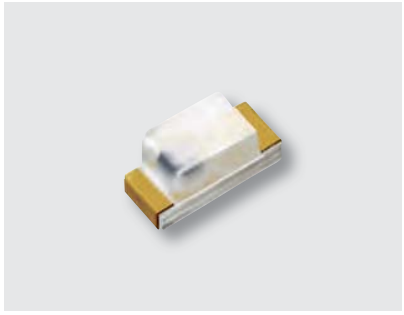

UNIT : mm

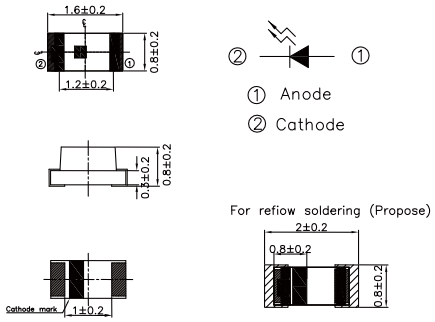

Product	Size (LxWxHmm)	λ_P (nm)	V_F Typ (V)	V_F Max (V)	Ie_Min (mW/sr)	Ie_Typ (mW/sr)	Viewing Angle (º)
IR19-21C/TR8	1.6x0.8x0.8	940	1.2	1.5	0.2	0.7	150
SIR19-21C/TR8	1.6x0.8x0.8	875	1.3	1.6	0.2	0.5	145
HIR19-21C/L11/TR8	1.6x0.8x0.8	850	1.45	1.65	0.2	0.8	145
HIR19-21C/L289/TR8	1.6x0.8x0.8	850	1.4	1.7	1.0	1.85	145

Infrared LED and Silicon Detector ▌Emitter ▌SMD

UNIT : mm

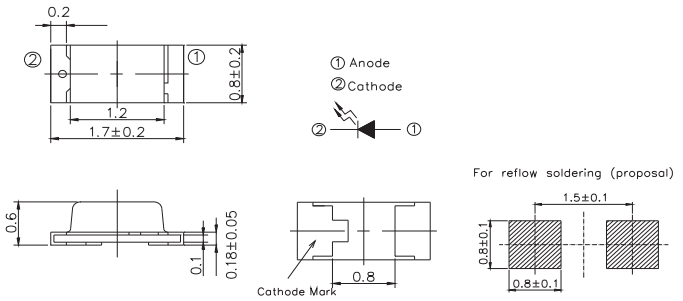

Product	Size (LxWxHmm)	λ_P (nm)	V_F Typ (V)	V_F Max (V)	Ie_Min (mW/sr)	Ie_Typ (mW/sr)	Viewing Angle (º)
IR19-315C/TR8	1.7x0.8x0.6	940	1.2	1.5	0.2	0.6	140

UNIT : mm

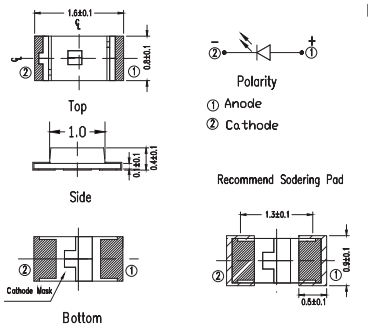

Product	Size (LxWxHmm)	λ_P (nm)	V_F Typ (V)	V_F Max (V)	Ie_Min (mW/sr)	Ie_Typ (mW/sr)	Viewing Angle (º)
IR19-217C/TR8	1.6x0.8x0.4	940	1.2	1.5	0.2	0.8	160

UNIT : mm

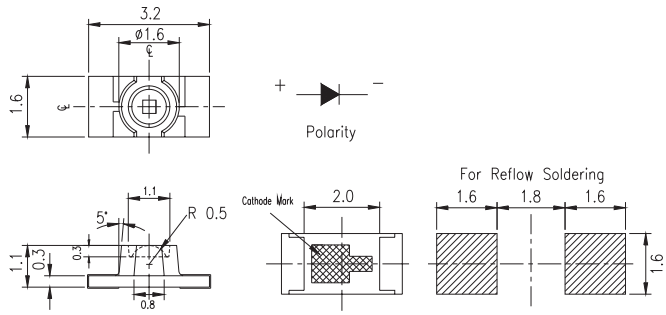

Product	Size (LxWxHmm)	λ_P (nm)	V_F Typ (V)	V_F Max (V)	Ie_Min (mW/sr)	Ie_Typ (mW/sr)	Viewing Angle (º)
IR25-21C/TR8	3.2x1.6x1.1	940	1.2	1.5	0.5	1.5	160
HIR25-21C/L423/TR8	3.2x1.6x1.1	850	1.45	1.65	3.0	5.5	70
HIR25-21C/L423/2T	3.2x1.6x1.1	850	1.6@50mA	2.0@50mA	3.0	5.5	70

Infrared LED and Silicon Detector ❙ Emitter ❙ SMD

UNIT : mm

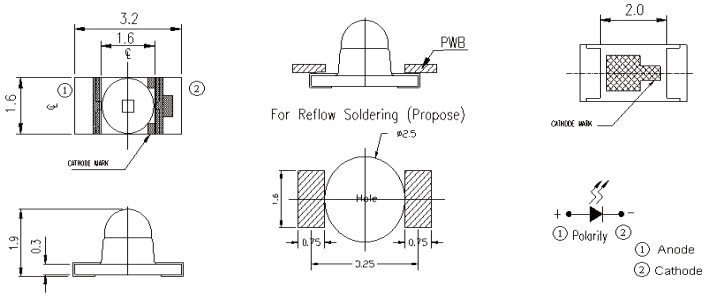

Product	Size (LxWxHmm)	λ_P (nm)	V_F Typ (V)	V_F Max (V)	Ie_Min (mW/sr)	Ie_Typ (mW/sr)	Viewing Angle (º)
IR26-21C/L110/TR8	3.2x1.6x1.9	940	1.2	1.5	1	3.0	20
HIR26-21C/L423/CT	3.2x1.6x1.9	855	1.45	1.7	14	25	20
HIR26-21C/L289/CT	3.2x1.6x1.9	850	1.4	1.7	10	17	20

UNIT : mm

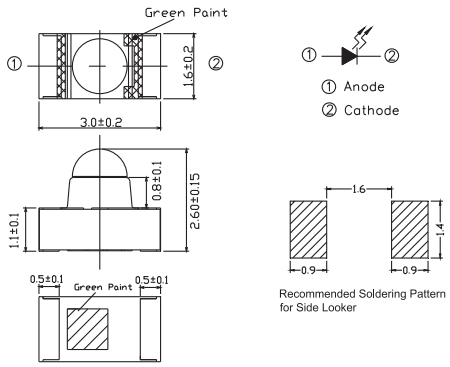

Product	Size (LxWxHmm)	λ_P (nm)	V_F Typ (V)	V_F Max (V)	Ie_Min (mW/sr)	Ie_Typ (mW/sr)	Viewing Angle (º)
IR26-51C/L110/TR8	3.0x1.6x2.6	940	1.2	1.5	2	4.5	20

UNIT : mm

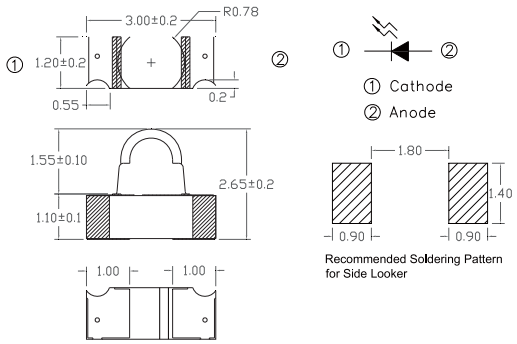

Product	Size (LxWxHmm)	λ_P (nm)	V_F Typ (V)	V_F Max (V)	Ie_Min (mW/sr)	Ie_Typ (mW/sr)	Viewing Angle (º)
IR26-61C/L302/TR8	3x1.2x2.65	940	1.25	1.5	4.0	8	20
IR26-61C/L447/TR8	3x1.2x2.65	940	1.20	1.5	13	18	30
IR26-61C/L675/TR8	3x1.2x2.65	940	1.2	1.5	4	8	40

Infrared LED and Silicon Detector ▌Emitter ▌SMD

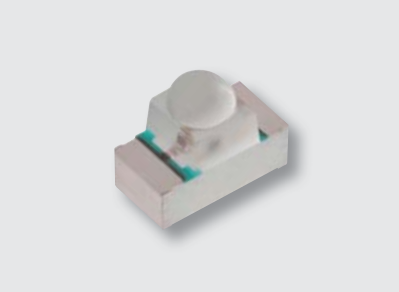

UNIT : mm

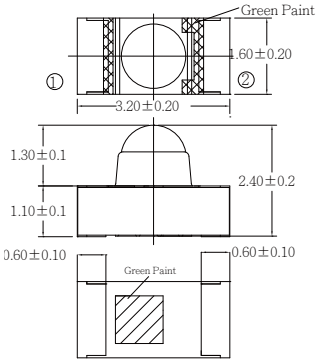

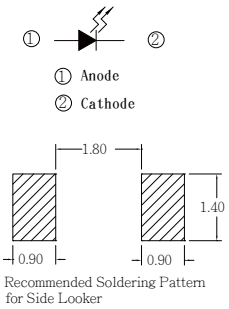

Product	Size (LxWxHmm)	λ_P (nm)	V_F Typ (V)	V_F Max (V)	Ie_Min (mW/sr)	Ie_Typ (mW/sr)	Viewing Angle (º)
IR26-71C/L302/TR8	3.2x1.6x2.4	940	1.25	1.5	2.0	4.5	45

UNIT : mm

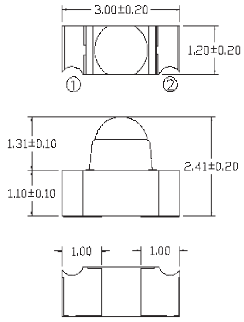

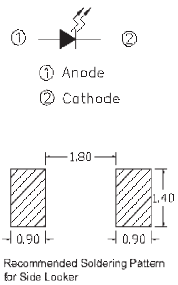

Product	Size (LxWxHmm)	λ_P (nm)	V_F Typ (V)	V_F Max (V)	Ie_Min (mW/sr)	Ie_Typ (mW/sr)	Viewing Angle (º)
IR26-71C/L447/S63/TR8	3.0x2.4x1.2	940	1.3	1.6	5	8.5	50

UNIT : mm

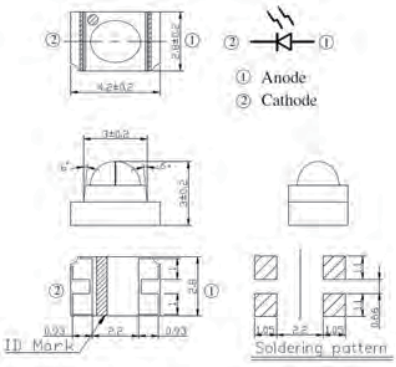

Product	Size (LxWxHmm)	λ_P (nm)	V_F Typ (V)	V_F Max (V)	Ie_Min (mW/sr)	Ie_Typ (mW/sr)	Viewing Angle (º)
IR28-01C/L491/2R	4.2x2.8x3	940	1.3	1.6	7	10	75(X) 40(Y)

Infrared LED and Silicon Detector ▌Emitter ▌SMD

UNIT : mm

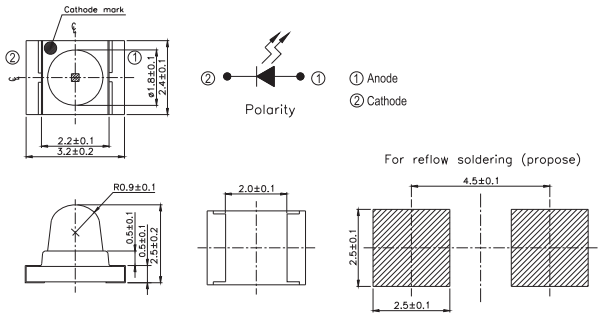

Product	Size (LxWxHmm)	λ_P (nm)	V_F Typ (V)	V_F Max (V)	Ie_Min (mW/sr)	Ie_Typ (mW/sr)	Viewing Angle (º)
IR42-21C/TR8	3.2x2.4x2.5	940	1.2	1.5	1	3	30
HIR42-21C/TR8	3.2x2.4x2.5	850	1.45	1.65	2	5	20
HIR42-21C/L289/TR8	3.2x2.4x2.5	850	1.4	1.6	11	30	20

UNIT : mm

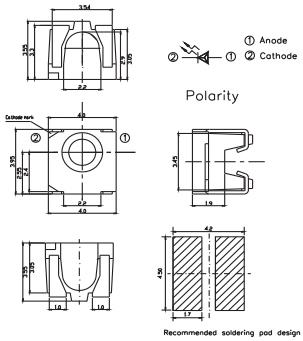

Product	Size (LxWxHmm)	λ_P (nm)	V_F Typ (V)	V_F Max (V)	Ie_Min (mW/sr)	Ie_Typ (mW/sr)	Viewing Angle (º)
IR57-21C/TR8	4x3.95x3.55	940	1.3	1.7	1	1.5	120

UNIT : mm

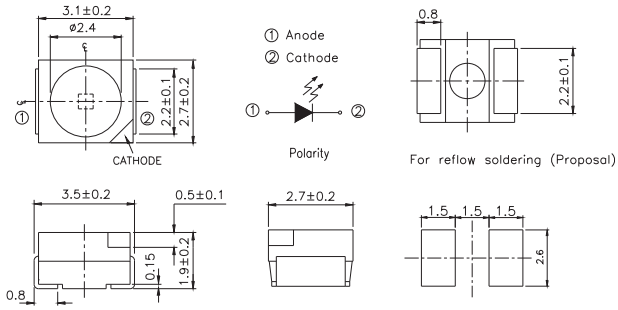

Product	Size (LxWxHmm)	λ_P (nm)	V_F Typ (V)	V_F Max (V)	Ie_Min (mW/sr)	Ie_Typ (mW/sr)	Viewing Angle (º)
HIR67-21C/L11/TR8	3.5x2.7x1.9	850	1.45	1.65	1	2	120
IR67-21C/TR8	3.5x2.7x1.9	940	1.2	1.5	1	1.5	120
SIR67-21C/TR8	3.5x2.7x1.9	875	1.3	1.6	0.5	1.1	120
HIR67-21C/L289/TR8	3.5x2.7x1.9	850	1.4	1.7	2	3	120

Infrared LED and Silicon Detector ▌Emitter ▌SMD

UNIT : mm

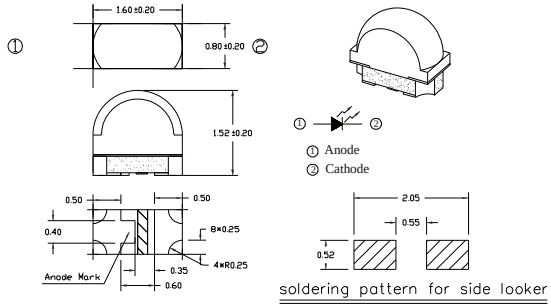

Product	Size (LxWxHmm)	λ_P (nm)	V_F Typ (V)	V_F Max (V)	Ie_Min (mW/sr)	Ie_Typ (mW/sr)	Viewing Angle (º)
HIR83-01B/TR8	1.6x0.8x1.52	850	1.4	1.7	2	5	100(X) 40(Y)
IR83-01C/L491/TR8	1.6x0.8x1.52	940	1.2	1.5	2	4	100(X) 40(Y)

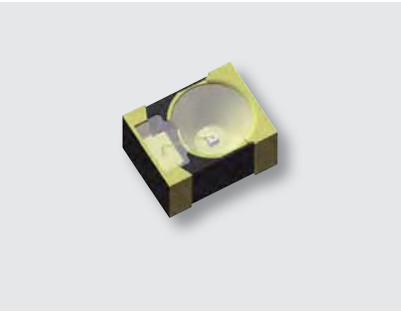

UNIT : mm

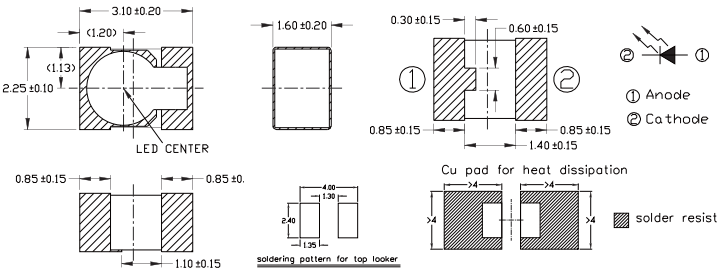

Product	Size (LxWxHmm)	λ_P (nm)	V_F Typ (V)	V_F Max (V)	Ie_Min (mW/sr)	Ie_Typ (mW/sr)	Viewing Angle (º)
HIR89-01C/1R	3.1x2.25x1.6	850	1.4	1.7	40@70mA	125(Max)	30
IR89-01C/L447/1R	3.1x2.25x1.6	940	1.75@100mA	2.2@100mA	40@70mA	60	30

UNIT : mm

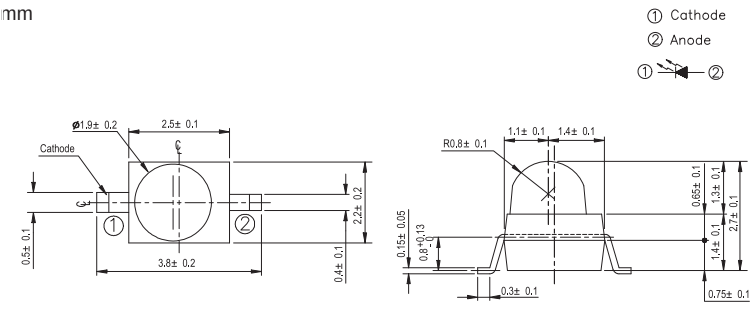

Product	Size (LxWxHmm)	λ_P (nm)	V_F Typ (V)	V_F Max (V)	Ie_Min (mW/sr)	Ie_Typ (mW/sr)	Viewing Angle (º)
IR91-21C	2.5x2.2x2.7	940	1.2	1.5	3	5	25
IR91-21C/TR7	2.5x2.2x2.7	940	1.2	1.5	3	5	25
IR91-21C/TR10	2.5x2.2x2.7	940	1.2	1.5	3	5	25
SIR91-21C/TR7	2.5x2.2x2.7	875	1.3	1.6	3	5	20

Infrared LED and Silicon Detector ▌Emitter ▌SMD

UNIT : mm

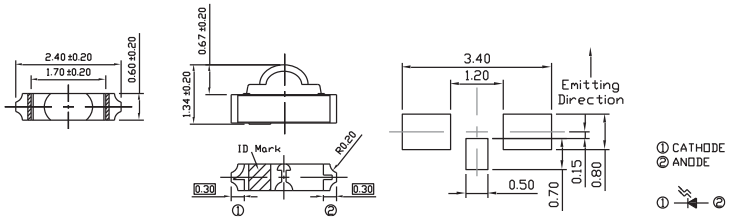

Product	Size (LxWxHmm)	λ_P (nm)	V_F Typ (V)	V_F Max (V)	Ie_Min (mW/sr)	Ie_Typ (mW/sr)	Viewing Angle (º)
IR12-206C/L268/TR8	2.4x0.6x1.34	940	1.2	1.4	0.8	1.5	160(X) 120(Y)

UNIT : mm

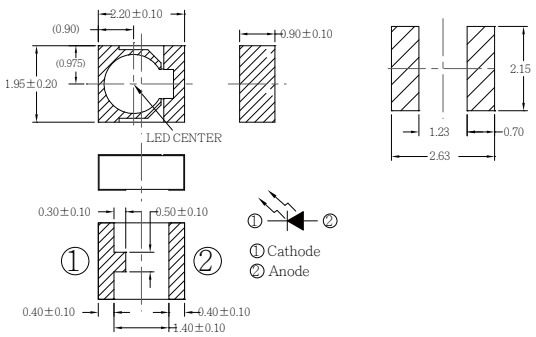

Product	Size (LxWxHmm)	λ_P (nm)	V_F Typ (V)	V_F Max (V)	Ie_Min (mW/sr)	Ie_Typ (mW/sr)	Viewing Angle (º)
HIR91-01C/L297/2T	2.2x1.95x0.9	850	1.4	1.7	25@70mA	40@70mA	40
IR91-01C/L491/2R	2.2x1.95x0.9	940	1.4	1.7	25@70mA	50@70mA	40

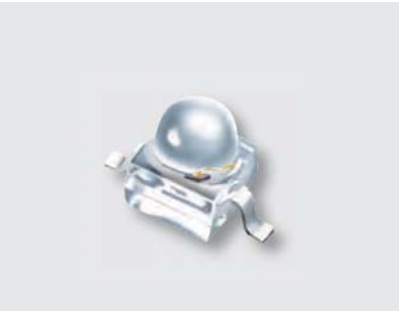

UNIT : mm

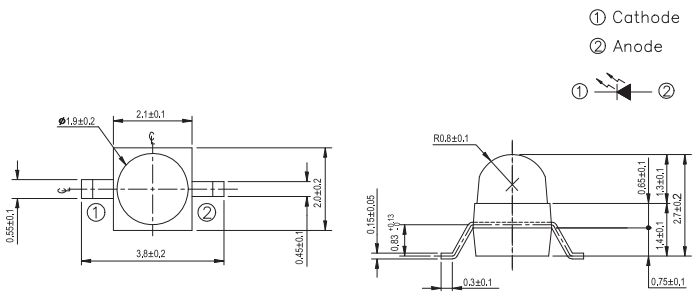

Product	Size (LxWxHmm)	λ_P (nm)	V_F Typ (V)	V_F Max (V)	Ie_Min (mW/sr)	Ie_Typ (mW/sr)	Viewing Angle (º)
IR95-21C/TR7	2.1x2x2.7	940	1.2	1.5	3	5	25
SIR95-21C/TR10	2.1x2x2.7	875	1.3	1.6	2	4	25

Infrared LED and Silicon Detector ❙ Emitter ❙ SMD

UNIT : mm

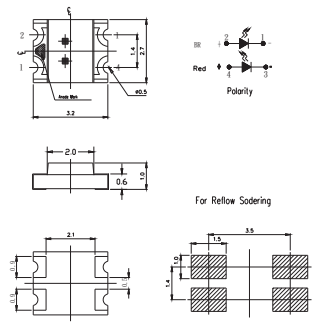

Product	Size (LxWxHmm)	λ_P (nm)	V_F Typ (V)	V_F Max (V)	Ie_Min (mW/sr)	Ie_Typ (mW/sr)	Viewing Angle (º)
BR15-22C/L586/TR8	3.2x2.7x1	660/905	1.8/1.3	2.2/1.6	0.5/0.2	1.5/0.5	120

UNIT : mm

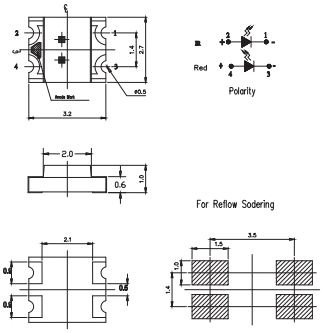

Product	Size (LxWxHmm)	λ_P (nm)	V_F Typ (V)	V_F Max (V)	Ie_Min (mW/sr)	Ie_Typ (mW/sr)	Viewing Angle (º)
IRR15-22C/L491/TR8	3.2x2.7x1	660/940	1.9/1.3	2.5/1.7	1.0/1.0	2.3/2.1	120

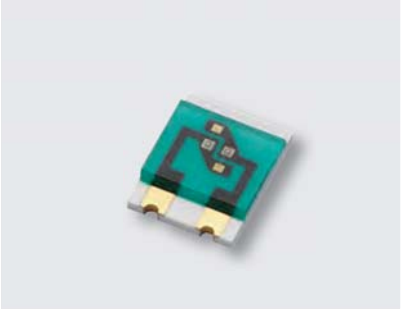

UNIT : mm

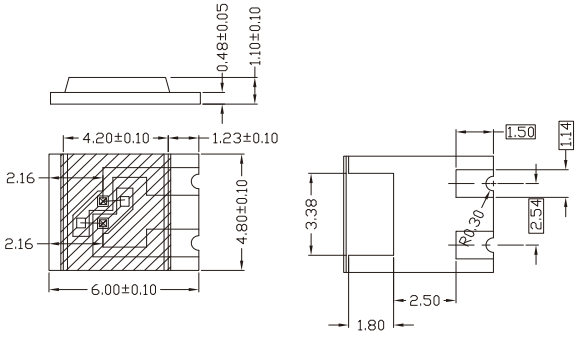

Product	Size (LxWxHmm)	λ_P (nm)	V_F Typ (V)	V_F Max (V)	Ie_Min (mW/sr)	Ie_Typ (mW/sr)	Viewing Angle (º)
IRR60-48C/TR8	6x4.8x1.1	660/905	2.2/1.4	2.6/1.8	0.5/0.5	1.6/0.9	125/145

Infrared LED and Silicon Detector ❙ Emitter ❙ SMD

UNIT : mm

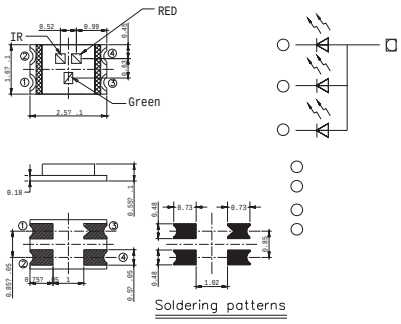

Product	Size (LxWxHmm)	λ_P (nm)	V_F Typ (V)	V_F Max (V)	Ie_Min (mW/sr)	Ie_Typ (mW/sr)	Viewing Angle (º)
IRRG25-16C/L491/TR8	2.5x1.6x0.55	525/660/940	3.0/1.9/1.3	3.5/2.3/1.7	1200mcd/150mcd/1.5	-	120

UNIT : mm

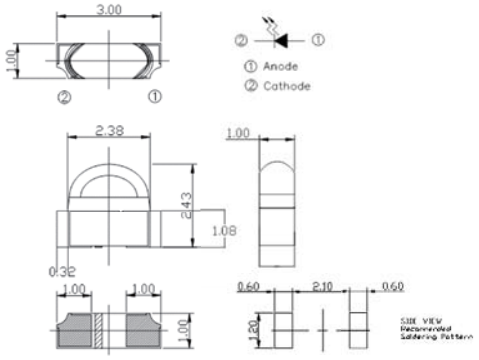

Product	Size (LxWxHmm)	λ_P (nm)	V_F Typ (V)	V_F Max (V)	Ie_Min (mW/sr)	Ie_Typ (mW/sr)	Viewing Angle (º)
IR26-91C/L510/2D	3x2.43x1	940	1.3	1.5	-	8	130(X)20(Y)

Infrared LED and Silicon Detector ❙ Emitter ❙ High Power

UNIT : mm

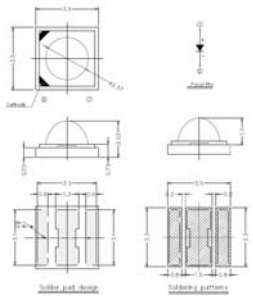

Product	Size (LxWxHmm)	λP (nm)	VF_Typ (V) (If = 350mA)	Ie_Typ (mW/sr) (If = 350mA)	Power_Typ (mW) (If = 350mA)	Viewing Angle (°)
HIR-C19D/090A/L682-P01/TR	3.5x3.5x2.36	850	1.7	85	260	100
IR-C19-N/L482-P01/TR	3.5x3.5x2.36	940	1.6	75	235	105
HIR-C19D-1N90/L649-P03/TR	3.5x3.5x2.36	850	3	200	500	90
IR-C19D-N90/L562-P03/TR	3.5x3.5x2.36	940	3.1	170	370	90
HIR-C19D/N150/L649-P03/TR	3.5x3.5x1.52	850	3	100	400	150

Infrared LED and Silicon Detector ❙ Photo Diode ❙ DIP

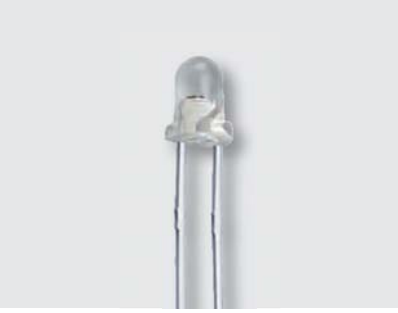

UNIT : mm

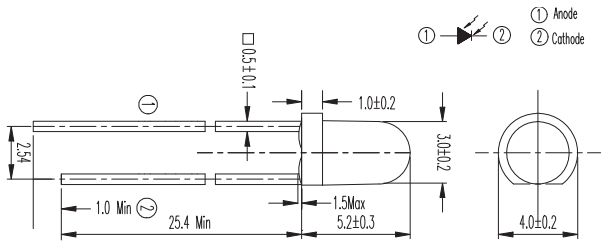

Product	Size (mm)	λ_P (nm)	I_L Min (μA)	I_L Typ (μA)	BVR_Min (V)	ID_Max (nA)
PD204-6C/L3	3	940	--	10	32	10

UNIT : mm

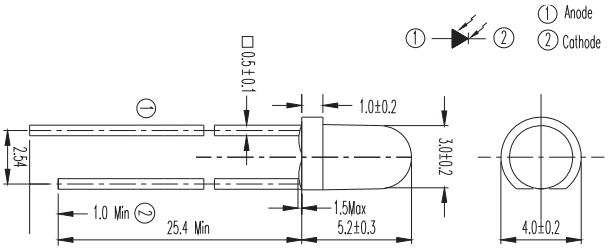

Product	Size (mm)	λ_P (nm)	I_L Min (μA)	I_L Typ (μA)	BVR_Min (V)	ID_Max (nA)
PD204-6B	3	940	1	3	32	10

UNIT : mm

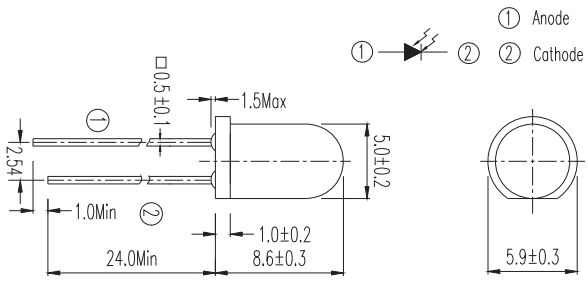

Product	Size (mm)	λ_P (nm)	I_L Min (μA)	I_L Typ (μA)	BVR_Min (V)	ID_Max (nA)
PD333-3C/H0/L2	5	940	36	40	32	30

Infrared LED and Silicon Detector ▌Photo Diode ▌DIP

UNIT : mm

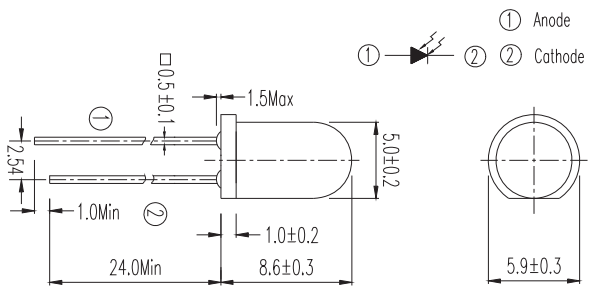

Product	Size (LxWxHmm)	λ_P (nm)	I_L_Min (μA)	I_L_Typ (μA)	BVR_Min (V)	ID_Max (nA)
PD333-3B/H0/L2	5	940	25	35	32	30

UNIT : mm

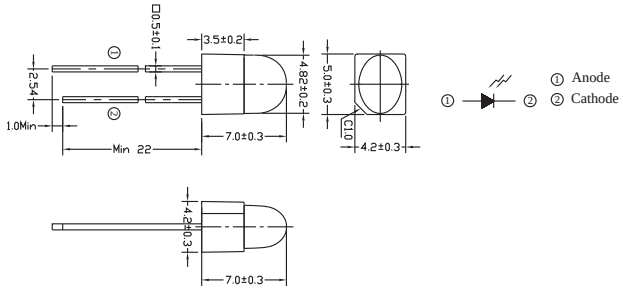

Product	Size (LxWxHmm)	λ_P (nm)	I_L_Min (μA)	I_L_Typ (μA)	BVR_Min (V)	ID_Max (nA)
PD5443-3B/L2	5	940	25	39	32	30

Infrared LED and Silicon Detector ▌Photo Diode ▌Side Look

UNIT : mm

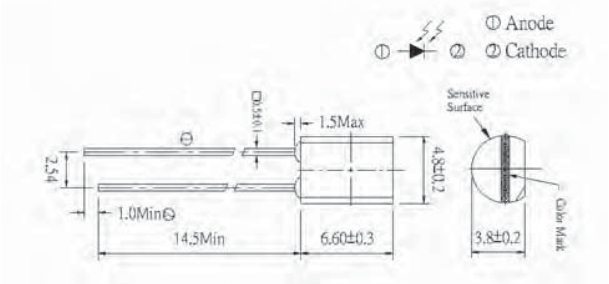

Product	Size (LxWxHmm)	λ_P (nm)	I_L Min (μA)	I_L Typ (μA)	Rise / Fall Time (ns)	BVR_Min.(V)	ID_Max (nA)
PD438C	4.8x3.8x6.6	940	10.2	18	50 / 50	32	30
PD438C/S46	4.8x3.8x6.6	940	10.2	18	50 / 50	32	30

Infrared LED and Silicon Detector ▌Photo Diode ▌Side Look

UNIT : mm

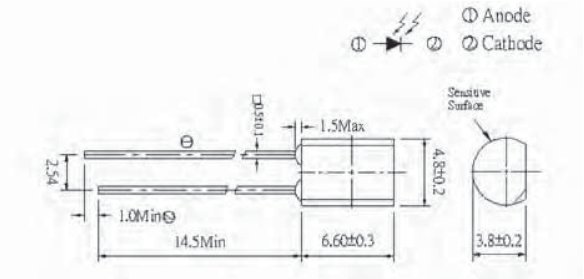

Product	Size (LxWxHmm)	λ_P (nm)	I_L Min (μA)	I_L Typ (μA)	Rise / Fall Time (ns)	BVR_Min.(V)	ID_Max (nA)
PD438B	4.8x3.8x6.6	940	10.2	18	50 / 50	32	30
PD438B/L1	4.8x3.8x6.6	940	2.6	4	10 / 10	32	10
PD438B/S46	4.8x3.8x6.6	940	10.2	18	50 / 50	32	30

UNIT : mm

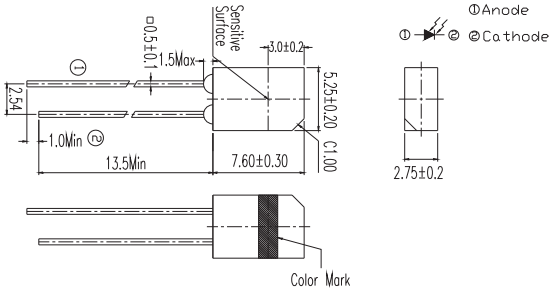

Product	Size (LxWxHmm)	λ_P (nm)	I_L Min (μA)	I_L Typ (μA)	Rise / Fall Time (ns)	BVR_Min.(V)	ID_Max (nA)
PD638B	5.2x2.75x7.6	940	10.2	18	50 / 50	32	30

Infrared LED and Silicon Detector ▌Photo Diode ▌SMD

UNIT : mm

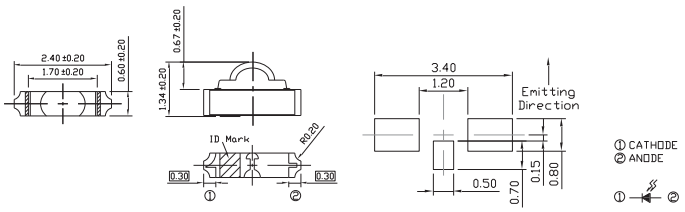

Product	Size (LxWxHmm)	λ_P (nm)	I_L Min (μA)	I_L Typ (μA)	BVR_Min.(V)	ID_Max (nA)
PD12-206B/L512/TR8	2.4x0.6x1.34	875	--	0.7	33	10

Infrared LED and Silicon Detector ▌Photo Diode ▌SMD

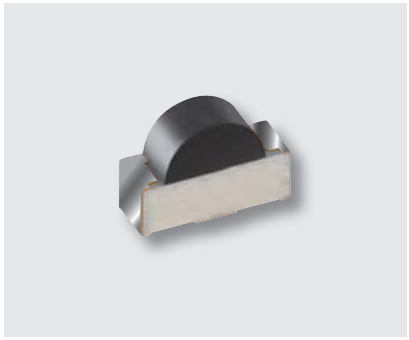

UNIT : mm

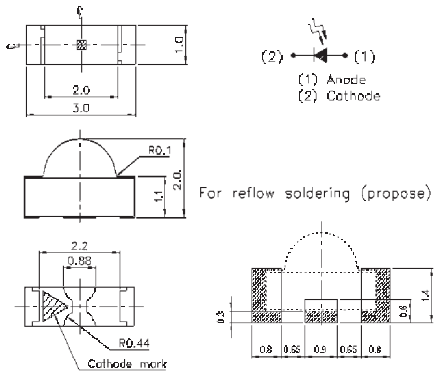

Product	Size (LxWxHmm)	λ_P (nm)	I_L Min (μA)	I_L Typ (μA)	BVR_Min.(V)	ID_Max (nA)
PD12-21B/L458/TR8	3x1x2	940	1.3	1.5	33	10

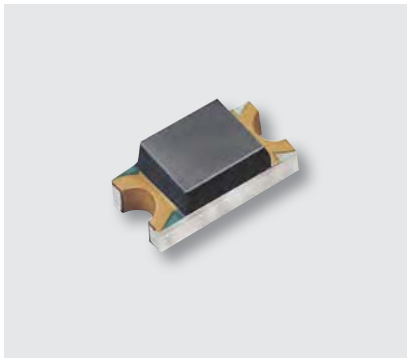

UNIT : mm

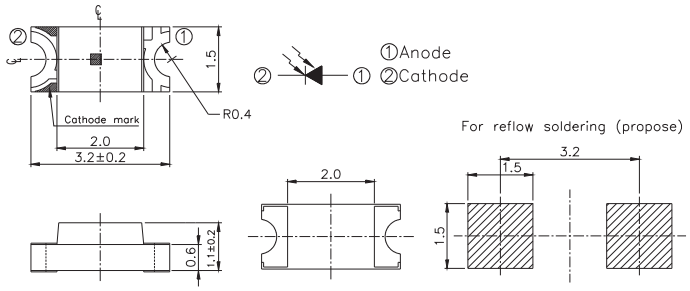

Product	Size (LxWxHmm)	λ_P (nm)	I_L Min (μA)	I_L Typ (μA)	BVR_Min.(V)	ID_Max (nA)
PD15-21B/TR8	3.2x1.5x1.1	940	0.2	0.8	32	10

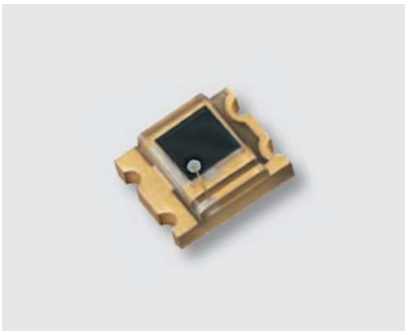

UNIT : mm

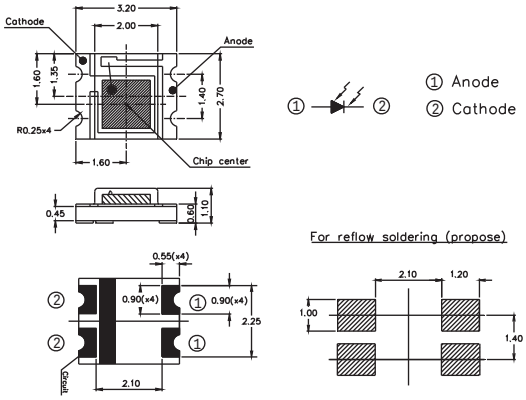

Product	Size (LxWxHmm)	λ_P (nm)	I_L Min (μA)	I_L Typ (μA)	BVR_Min.(V)	ID_Max (nA)
PD15-22C/TR8	3.2x2.7x1.1	940	4.2	6.5	32	10

Infrared LED and Silicon Detector ❙ Photo Diode ❙ SMD

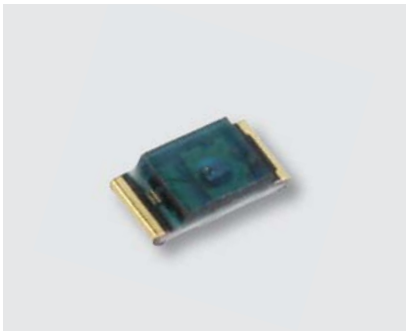

UNIT : mm

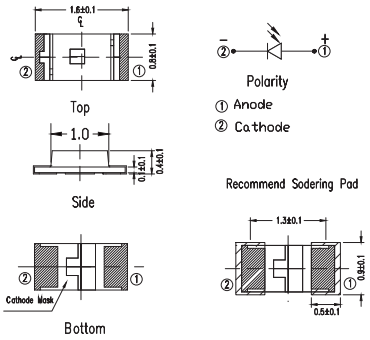

Product	Size (LxWxHmm)	λ_P (nm)	I_L Min (μA)	I_L Typ (μA)	BVR_Min.(V)	ID_Max (nA)
PD19-217B/TR8	1.6x0.8x0.4	940	0.1	0.3	32	10

UNIT : mm

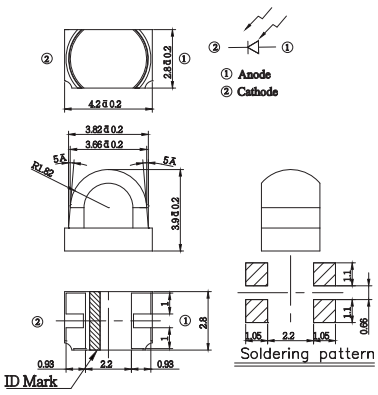

Product	Size (LxWxHmm)	λ_P (nm)	I_L Min (μA)	I_L Typ (μA)	BVR_Min.(V)	ID_Max (nA)
PD28-01B/L609/2R	4.2x2.8x3.9	940	20	25	32	30

UNIT : mm

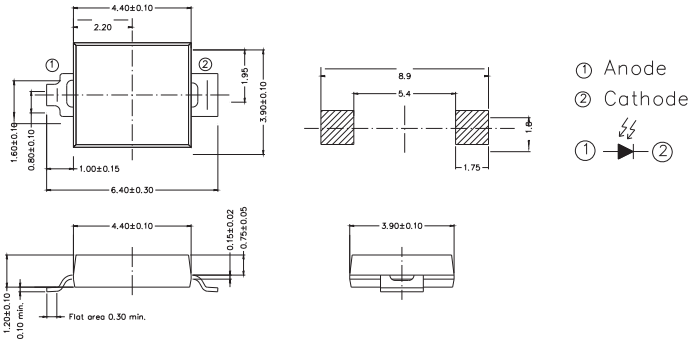

Product	Size (LxWxHmm)	λ_P (nm)	I_L Min (μA)	I_L Typ (μA)	BVR_Min.(V)	ID_Max (nA)
PD70-01B/TR7	4.4x3.9x1.2	940	17	25	32	30
PD70-01C/TR7	4.4x3.9x1.2	940	17	25	32	30

Infrared LED and Silicon Detector ▌Photo Diode ▌SMD

UNIT : mm

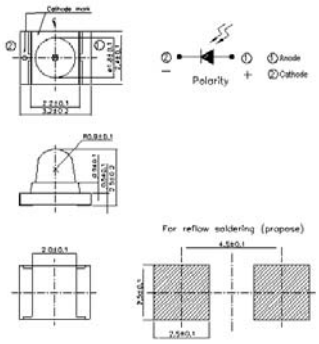

Product	Size (LxWxHmm)	λ_P (nm)	I_L Min (μA)	I_L Typ (μA)	BVR_Min.(V)	ID_Max (nA)
PD42-21B/TR8	3.2x2.4x2.6	940	2	4	32	10
PD42-21C/TR8	3.2x2.4x2.6	940	2	5	32	10

UNIT : mm

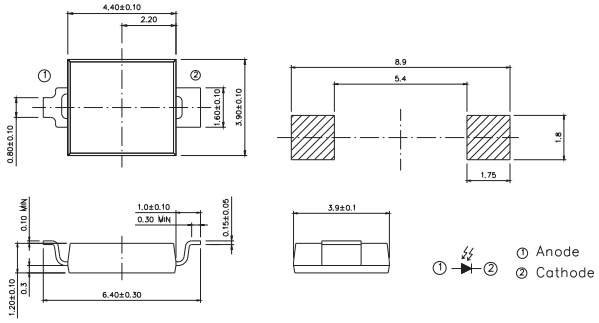

Product	Size (LxWxHmm)	λ_P (nm)	I_L Min (μA)	I_L Typ (μA)	BVR_Min.(V)	ID_Max (nA)
PD70-01B/TR10	4.4x3.9x1.2	940	17	25	32	30
PD70-01C/TR10	4.4x3.9x1.2	940	17	25	32	30

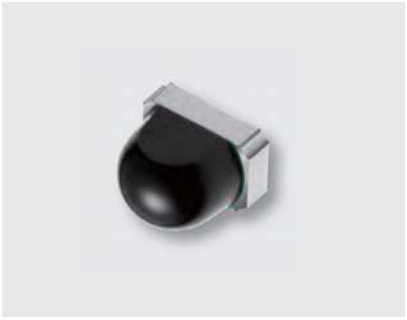

UNIT : mm

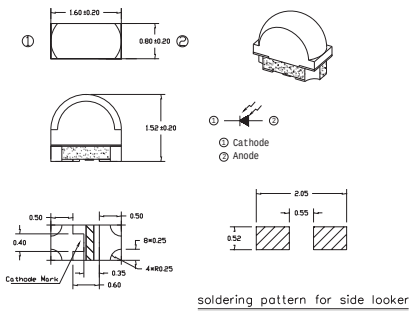

Product	Size (LxWxHmm)	λ_P (nm)	I_L Min (μA)	I_L Typ (μA)	BVR_Min.(V)	ID_Max (nA)
PD83-01B/L458/TR8	1.6x0.8x1.52	940	1.14	2.4	32	10

Infrared LED and Silicon Detector ❙ Photo Diode ❙ SMD

UNIT : mm

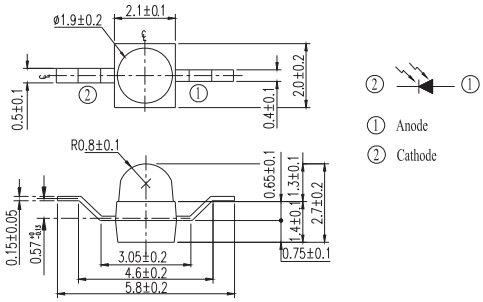

Product	Size (LxWxHmm)	λ_P (nm)	I_L Min (μA)	I_L Typ (μA)	BVR_Min.(V)	ID_Max (nA)
PD95-21B/TR10	2.1x2x2.7	940	1	4	32	10

UNIT : mm

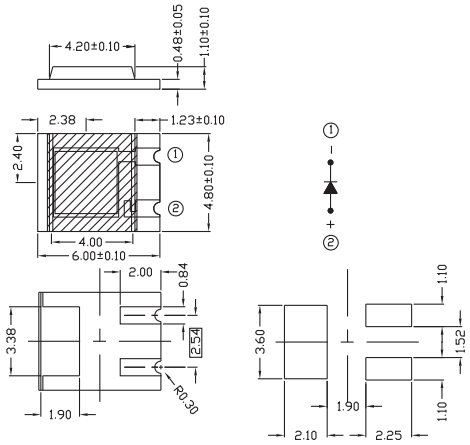

Product	Size (LxWxHmm)	λ_P (nm)	I_L_Min (μA)	I_L_Typ (μA)	BVR_Min (V)	ID_Max (nA)
PD60-48C/TR8	6x4.8x1.1	940	17	33.5	33	20

UNIT : mm

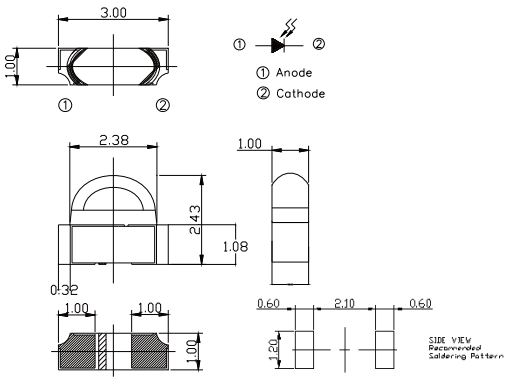

Product	Size (LxWxHmm)	λ_P (nm)	I_L Min (μA)	I_L Typ (μA)	BVR_Min.(V)	ID_Max (nA)
PD26-91B/L458/2C	3x2.43x1	900	-	2	33	10

Infrared LED and Silicon Detector ❙ Photo Transistor ❙ DIP

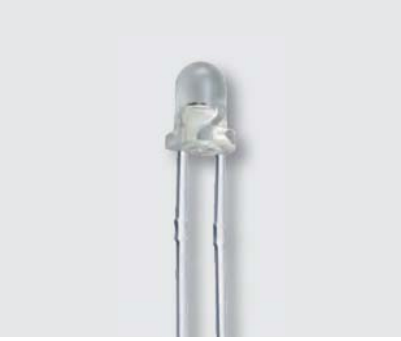

UNIT : mm

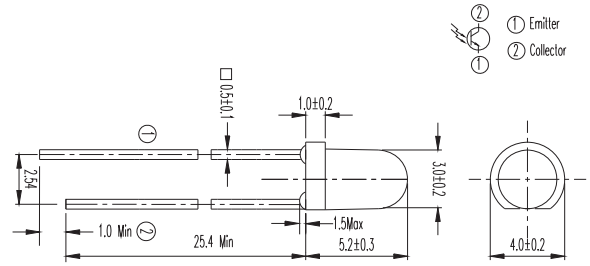

Product	Size (mm)	λ_P (nm)	$V_{CE(SAT)}$_Max (V)	$I_{C(ON)}$_Min (mA)	$I_{C(ON)}$_Typ (mA)	$I_{C(ON)}$_Max (mA)
PT204-6C	3	940	0.4	0.7	2	--

UNIT : mm

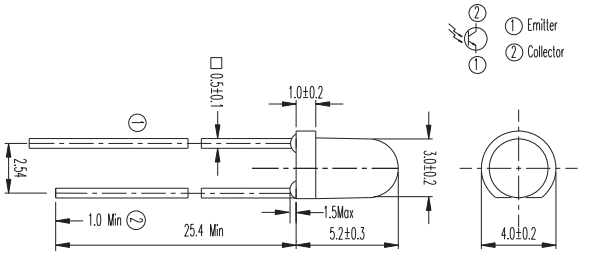

Product	Size (mm)	λ_P (nm)	$V_{CE(SAT)}$_Max (V)	$I_{C(ON)}$_Min (mA)	$I_{C(ON)}$_Typ (mA)	$I_{C(ON)}$_Max (mA)
PT204-6B	3	940	0.4	0.7	--	5.07

UNIT : mm

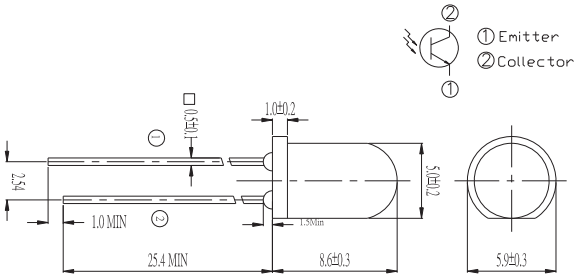

Product	Size (mm)	λ_P (nm)	$V_{CE(SAT)}$_Max (V)	$I_{C(ON)}$_Min (mA)	$I_{C(ON)}$_Typ (mA)	$I_{C(ON)}$_Max (mA)
PT333-3C	5	940	0.4	0.7	4	--

Infrared LED and Silicon Detector ▌Photo Transistor ▌DIP

UNIT : mm

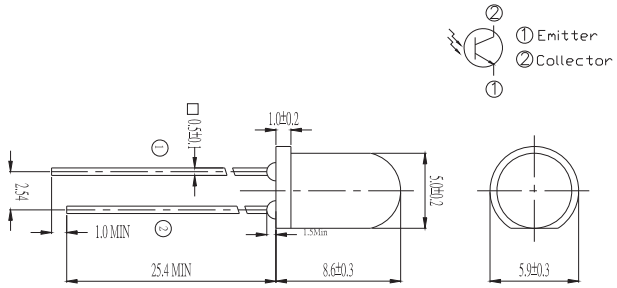

Product	Size (mm)	λ_P (nm)	$V_{CE(SAT)}$_Max (V)	$I_{C(ON)}$_Min (mA)	$I_{C(ON)}$_Typ (mA)	$I_{C(ON)}$_Max (mA)
PT333-3B	5	940	0.4	0.7	3	--

UNIT : mm

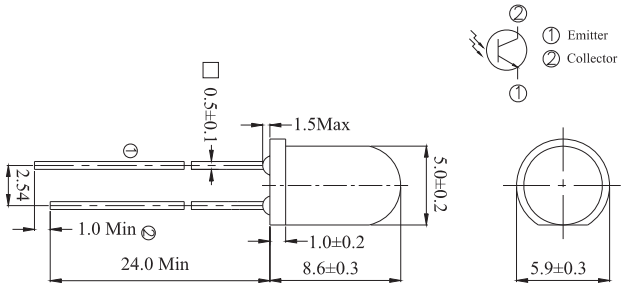

Product	Size (mm)	λ_P (nm)	$V_{CE(SAT)}$_Max (V)	$I_{C(ON)}$_Min (mA)	$I_{C(ON)}$_Typ (mA)	$I_{C(ON)}$_Max (mA)
PT334-6C	5	940	0.4	1.77	3.5	--

UNIT : mm

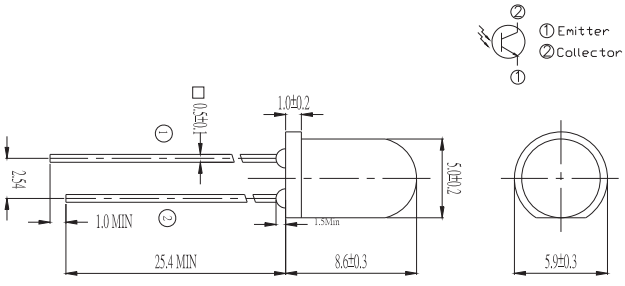

Product	Size (mm)	λ_P (nm)	$V_{CE(SAT)}$_Max (V)	$I_{C(ON)}$_Min (mA)	$I_{C(ON)}$_Typ (mA)	$I_{C(ON)}$_Max (mA)
PT334-6B	5	940	0.4	0.7	2	--

Infrared LED and Silicon Detector ❙ Photo Transistor ❙ DIP

UNIT : mm

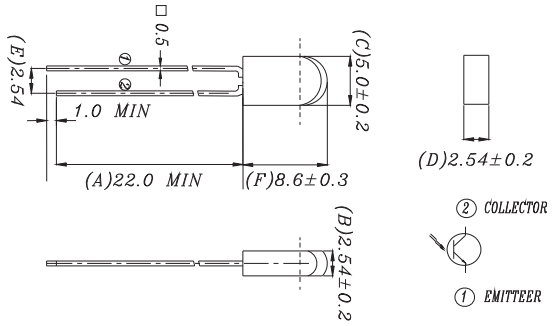

Product	Size (mm)	λ_P (nm)	$V_{CE(SAT)}$_Max (V)	$I_{C(ON)}$_Min (mA)	$I_{C(ON)}$_Typ (mA)	$I_{C(ON)}$_Max (mA)
PT534-6B	5	940	0.4	0.7	1.2	--

UNIT : mm

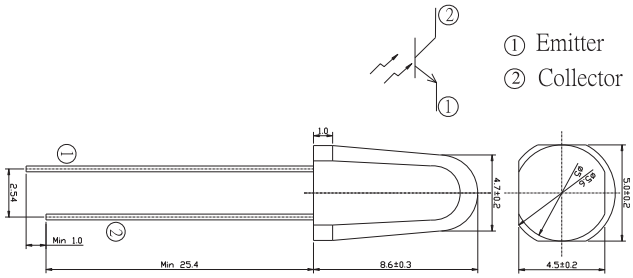

Product	Size (mm)	λ_P (nm)	$V_{CE(SAT)}$_Max (V)	$I_{C(ON)}$_Min (mA)	$I_{C(ON)}$_Typ (mA)	$I_{C(ON)}$_Max (mA)
PT1504-6B	5	940	0.4	1.77	4	--

Infrared LED and Silicon Detector ❙ Photo Transistor ❙ Side Look

UNIT : mm

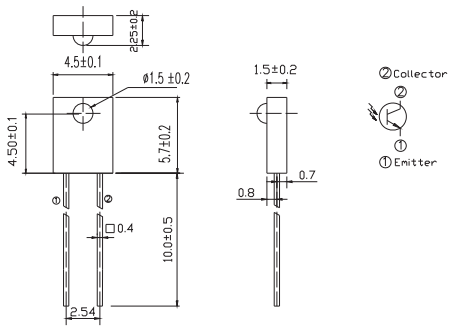

Product	Size (LxWxHmm)	λ_P (nm)	Rise / Fall Time (μs)	$V_{CE(SAT)}$_Max (V)	$I_{C(ON)}$_Min (mA)	$I_{C(ON)}$_Typ (mA)	$I_{C(ON)}$_Max (mA)
PT908-7B-F	4.5x2.25x5.7	940	15 / 15	0.4	0.8	--	5
PT908-7C-F	4.5x2.25x5.7	940	15 / 15	0.4	0.8	--	5

Infrared LED and Silicon Detector ❙ Photo Transistor ❙ Side Look

UNIT : mm

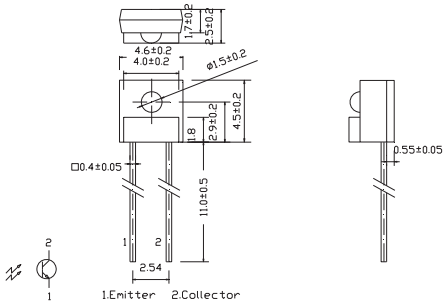

Product	Size (LxWxHmm)	λ_P (nm)	Rise / Fall Time (μs)	$V_{CE(SAT)}$_Max (V)	$I_{C(ON)}$_Min (mA)	$I_{C(ON)}$_Typ (mA)	$I_{C(ON)}$_Max (mA)
PT928-6B-F	4.6x2.5x4.5	940	15 / 15	0.4	0.53	--	3.41
PT928-6C-F	4.6x2.5x4.5	940	15 / 15	0.4	0.53	--	3.41

UNIT : mm

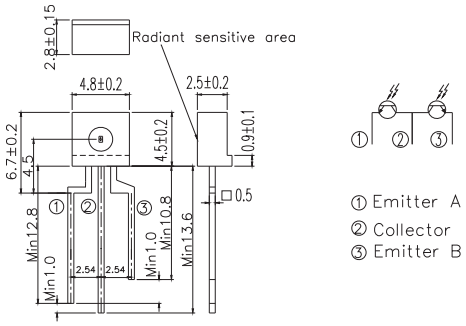

Product	Size (LxWxHmm)	λ_P (nm)	Rise / Fall Time (μs)	$V_{CE(SAT)}$_Max (V)	$I_{C(ON)}$_Min (mA)	$I_{C(ON)}$_Typ (mA)	$I_{C(ON)}$_Max (mA)
PT2559B/L2-F	4.8x2.8x4.5	940	15 / 15	0.4	0.129	--	1.085
PT2559B/L2/H2-F	4.8x2.8x4.5	940	15 / 15	0.4	0.129	--	1.085
PT5529B/L2-F	4.8x2.8x4.5	940	15 / 15	0.4	0.129	--	1.085
PT5529B/L2/H2-F	4.8x2.8x4.5	940	15 / 15	0.4	0.129	--	1.085

UNIT : mm

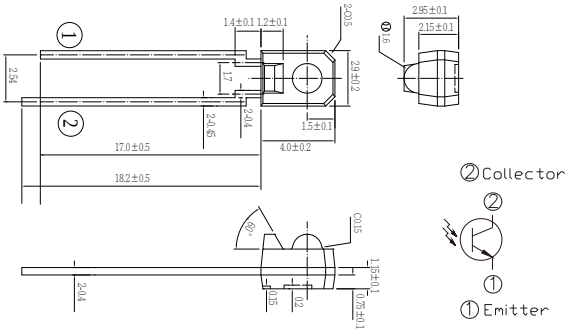

Product	Size (LxWxHmm)	λ_P (nm)	Rise / Fall Time (μs)	$V_{CE(SAT)}$_Max (V)	$I_{C(ON)}$_Min (mA)	$I_{C(ON)}$_Typ (mA)	$I_{C(ON)}$_Max (mA)
PT968-8C	2.9x2.9x4	940	15 / 15	0.4	1.59	--	3.41

Infrared LED and Silicon Detector ❙ Photo Transistor ❙ SMD

UNIT : mm

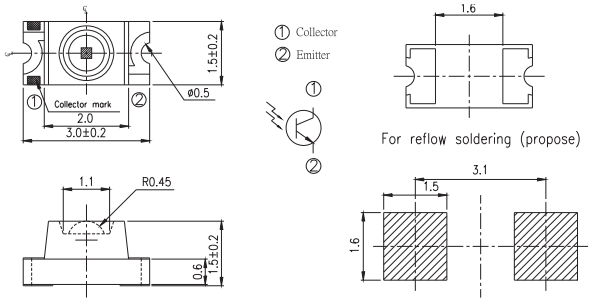

Product	Size (LxWxHmm)	λ_P (nm)	$V_{CE(SAT)}$_Max (V)	$I_{C(ON)}$_Min (mA)	$I_{C(ON)}$_Typ (mA)	$I_{C(ON)}$_Max (mA)
PT11-21C/L41/TR8	3x1.5x1.5	940	0.4	0.3	0.8	--

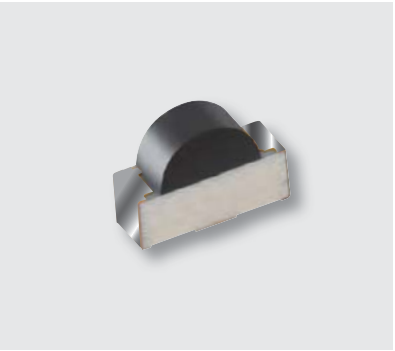

UNIT : mm

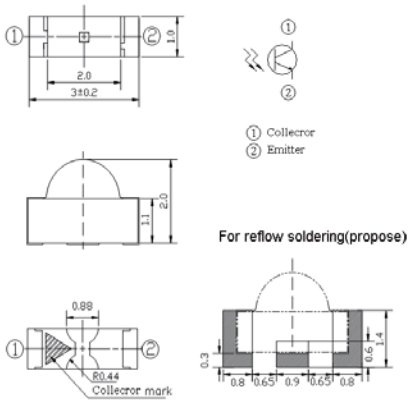

Product	Size (LxWxHmm)	λ_P (nm)	$V_{CE(SAT)}$_Max (V)	$I_{C(ON)}$_Min (mA)	$I_{C(ON)}$_Typ (mA)	$I_{C(ON)}$_Max (mA)
PT12-21B/TR8	3x1x2	940	0.4	0.3	--	--
PT12-21C/TR8	3x1x2	940	0.4	0.3	1.14	--

UNIT : mm

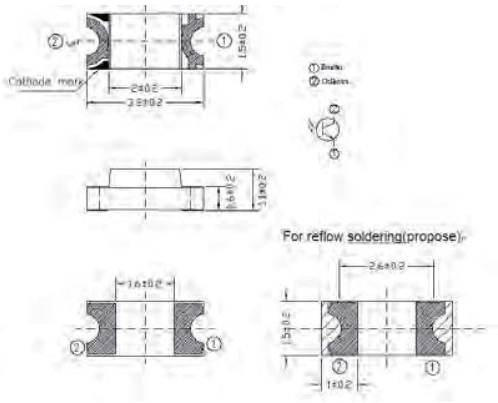

Product	Size (LxWxHmm)	λ_P (nm)	$V_{CE(SAT)}$_Max (V)	$I_{C(ON)}$_Min (mA)	$I_{C(ON)}$_Typ (mA)	$I_{C(ON)}$_Max (mA)
PT15-21B/TR8	3.2x1.5x1.1	940	0.4	0.1	0.3	--
PT15-21C/TR8	3.2x1.5x1.1	940	0.4	0.1	0.3	--

Infrared LED and Silicon Detector ❙ Photo Transistor ❙ SMD

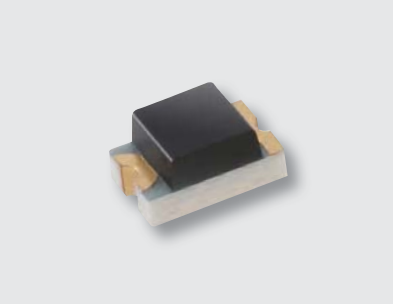

UNIT : mm

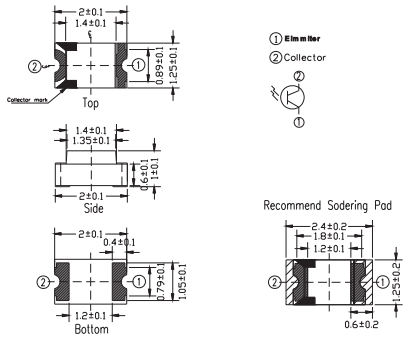

Product	Size (LxWxHmm)	λ_P (nm)	$V_{CE(SAT)}$_Max (V)	$I_{C(ON)}$_Min (mA)	$I_{C(ON)}$_Typ (mA)	$I_{C(ON)}$_Max (mA)
PT17-21B/L41/TR8	2x1.25x1.0	940	0.4	0.1	0.65	--
PT17-21C/L41/TR8	2x1.25x1.0	940	0.4	0.3	1	--

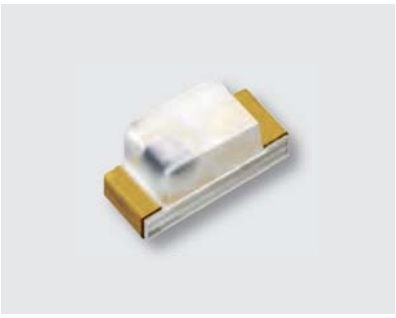

UNIT : mm

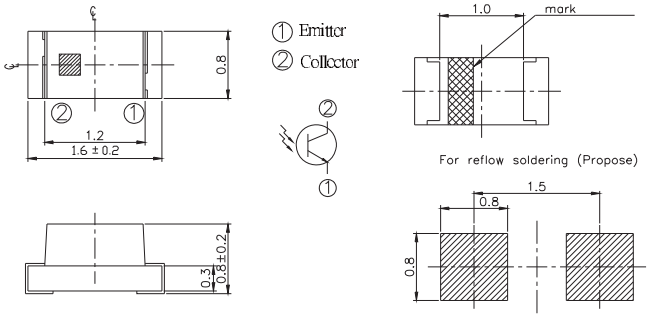

Product	Size (LxWxHmm)	λ_P (nm)	$V_{CE(SAT)}$_Max (V)	$I_{C(ON)}$_Min (mA)	$I_{C(ON)}$_Typ (mA)	$I_{C(ON)}$_Max (mA)
PT19-21B/L41/TR8	1.6x0.8x0.8	940	0.4	0.3	0.6	--
PT19-21C/L41/TR8	1.6x0.8x0.8	940	0.4	0.3	0.6	--

UNIT : mm

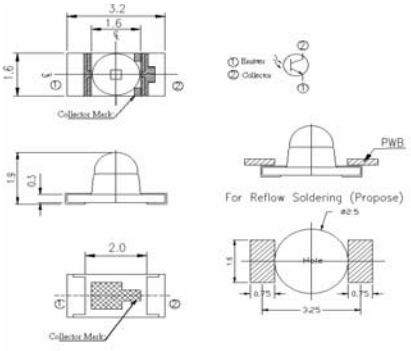

Product	Size (LxWxHmm)	λ_P (nm)	$V_{CE(SAT)}$_Max (V)	$I_{C(ON)}$_Min (mA)	$I_{C(ON)}$_Typ (mA)	$I_{C(ON)}$_Max (mA)
PT26-21B/TR8	3.2x1.6x1.9	940	0.4	--	2.6	--
PT26-21C/TR8	3.2x1.6x1.9	940	0.4	0.3	2.6	--

Infrared LED and Silicon Detector ▌Photo Transistor ▌SMD

UNIT : mm

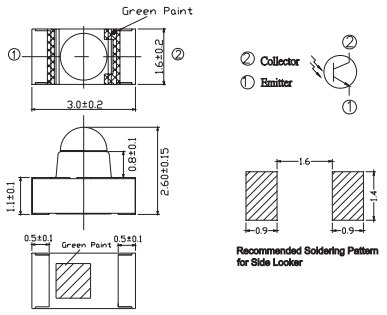

Product	Size (LxWxHmm)	λ_P (nm)	$V_{CE(SAT)}$_Max (V)	$I_{C(ON)}$_Min (mA)	$I_{C(ON)}$_Typ (mA)	$I_{C(ON)}$_Max (mA)
PT26-51B/TR8	3.0x1.6x2.6	940	0.4	--	1	--

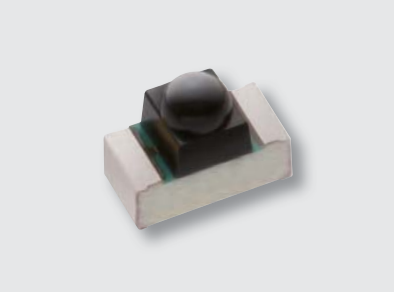

UNIT : mm

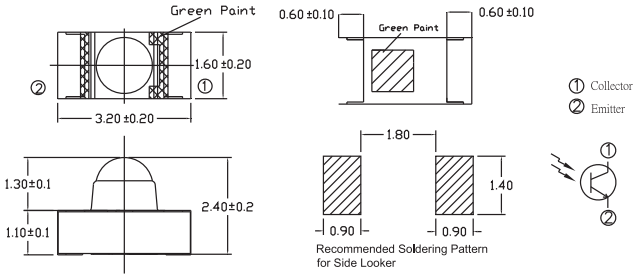

Product	Size (LxWxHmm)	λ_P (nm)	$V_{CE(SAT)}$_Max (V)	$I_{C(ON)}$_Min (mA)	$I_{C(ON)}$_Typ (mA)	$I_{C(ON)}$_Max (mA)
PT26-71B/TR8	3.2x1.6x2.4	920	0.4	1.14	3	--

UNIT : mm

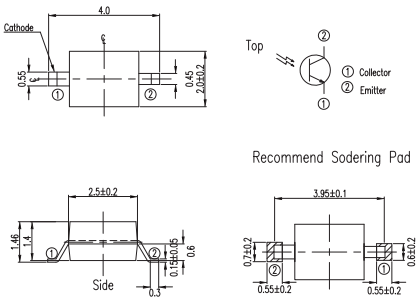

Product	Size (LxWxHmm)	λ_P (nm)	$V_{CE(SAT)}$_Max (V)	$I_{C(ON)}$_Min (mA)	$I_{C(ON)}$_Typ (mA)	$I_{C(ON)}$_Max (mA)
PT28-21B/TR8	2.5x2.0x1.4	940	0.4	0.1	0.3	-

UNIT : mm

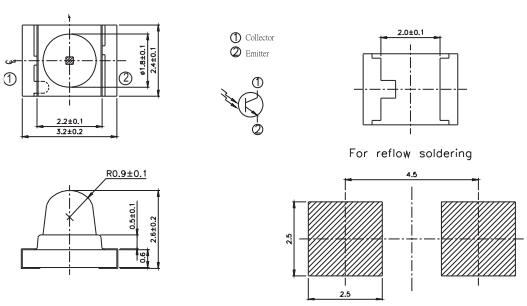

Product	Size (LxWxHmm)	λ_P (nm)	$V_{CE(SAT)}$_Max (V)	$I_{C(ON)}$_Min (mA)	$I_{C(ON)}$_Typ (mA)	$I_{C(ON)}$_Max (mA)
PT42-21B/TR8	3.2x2.4x2.6	940	0.4	1.77	3	--

Infrared LED and Silicon Detector ▌Photo Transistor ▌SMD

UNIT : mm

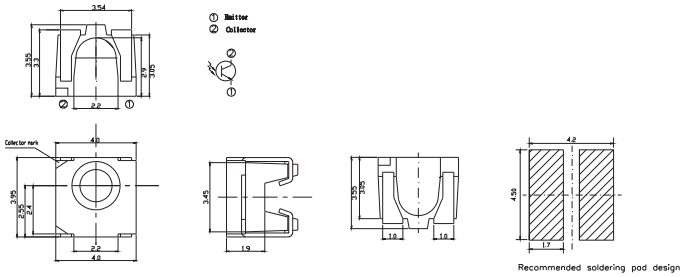

Product	Size (LxWxHmm)	λ_P (nm)	$V_{CE(SAT)}$_Max (V)	$I_{C(ON)}$_Min (mA)	$I_{C(ON)}$_Typ (mA)	$I_{C(ON)}$_Max (mA)
PT57-21B/TR8	4x3.95x3.55	940	0.4	0.4	0.8	5.0

UNIT : mm

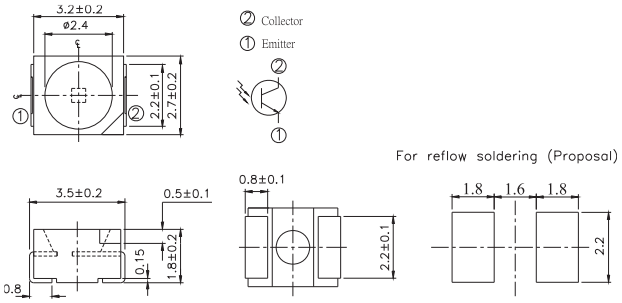

Product	Size (LxWxHmm)	λ_P (nm)	$V_{CE(SAT)}$_Max (V)	$I_{C(ON)}$_Min (mA)	$I_{C(ON)}$_Typ (mA)	$I_{C(ON)}$_Max (mA)
PT67-21B/C14/TR8	3.5x2.7x1.8	940	0.4	0.016	--	0.08

UNIT : mm

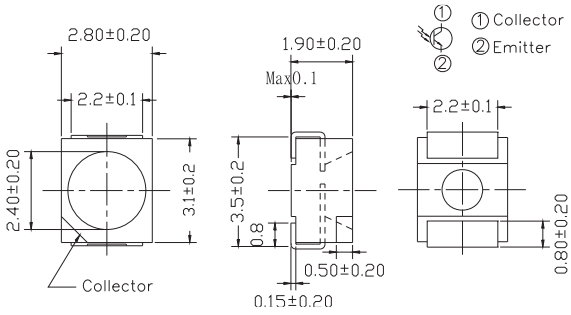

Product	Size (LxWxHmm)	λ_P (nm)	$V_{CE(SAT)}$_Max (V)	$I_{C(ON)}$_Min (mA)	$I_{C(ON)}$_Typ (mA)	$I_{C(ON)}$_Max (mA)
PT67-21C/L41/TR8	3.5x2.8x1.9	940	0.4	0.3	1	--

Infrared LED and Silicon Detector ❙ Photo Transistor ❙ SMD

UNIT : mm

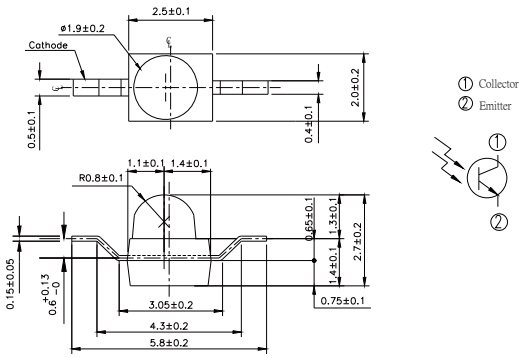

Product	Size (LxWxHmm)	λ_P (nm)	$V_{CE(SAT)}$_Max (V)	$I_{C(ON)}$_Min (mA)	$I_{C(ON)}$_Typ (mA)	$I_{C(ON)}$_Max (mA)
PT91-21B	2.5x2x2.7	940	0.4	1	3	--
PT91-21B/TR10	2.5x2x2.7	940	0.4	1	3	--
PT91-21B/TR7	2.5x2x2.7	940	0.4	1	3	--
PT91-21B/TR9	2.5x2x2.7	940	0.4	1	3	--

UNIT : mm

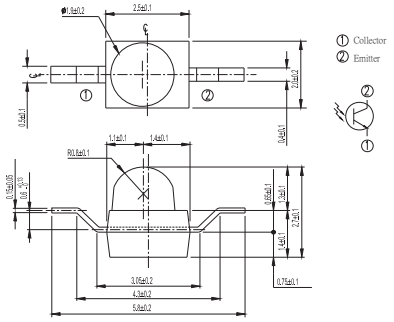

Product	Size (LxWxHmm)	λ_P (nm)	$V_{CE(SAT)}$_Max (V)	$I_{C(ON)}$_Min (mA)	$I_{C(ON)}$_Typ (mA)	$I_{C(ON)}$_Max (mA)
PT91-21C	2.5x2x2.7	940	0.4	1	1.5	--
PT91-21C/TR10	2.5x2x2.7	940	0.4	1	1.5	--
PT91-21C/TR7	2.5x2x2.7	940	0.4	1	1.5	--

Infrared Receiver Module ❙ DIP ❙ Vout-GND-Vcc

UNIT : mm

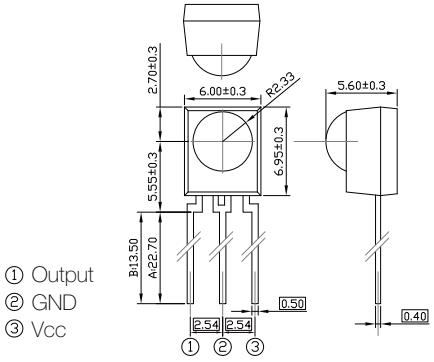

IRM-36xx

Product	Size (LxWxHmm)	λ_P (nm)	Carrier Freq. (KHz)	Supply Voltage (V)	I_{CC} Typ (mA)	L_{Center} (m)	L_{45} (m)
IRM-36xxT(A	8.25x6.0x5.6	940	36 / 38	2.7~5.5	1	14	6
IRM-36xxM(A	8.25x6.0x5.6	940	36 / 38	2.7~5.5	0.4	14	6
IRM-36xxM2(A	8.25x6.0x5.6	940	36 / 38 / 40	2.7~5.5	0.4	14	6
IRM-36xxM3(A	8.25x6.0x5.6	940	36 / 38	2.7~5.5	0.4	14	6
IRM-36xxM6(A	8.25x6.0x5.6	940	56	2.7~5.5	0.4	14	6
IRM-36xxJ(A	8.25x6.0x5.6	940	38	2.7~5.5	1	14	6
IRM-36xxJ2(A	8.25x6.0x5.6	940	36 / 38	2.7~5.5	0.4	14	6
IRM-36xxZ(A	8.25x6.0x5.6	940	36 / 38 / 40 / 56	2.5~5.5	0.3	14	6
IRM-36xx(A	8.25x6.0x5.6	940	38	2.7~5.5	1	14	6
IRM-36xxN3(A	8.25x6.0x5.6	940	38	2.7~5.5	1	14	6
IRM-36xxT-X(B	8.25x6.0x5.6	940	36 / 38	2.7~5.5	1	14	6
IRM-36xxM-X(B	8.25x6.0x5.6	940	36 / 38	2.7~5.5	0.4	14	6
IRM-36xxM2-X(B	8.25x6.0x5.6	940	36 / 38 / 40	2.7~5.5	0.4	14	6
IRM-36xxM3-X(B	8.25x6.0x5.6	940	36 / 38	2.7~5.5	0.4	14	6

IRM-S19	IRM-36XXXS19

IRM-S27	IRM-36XXXS27

IRM-S28	IRM-36XXXS28

Infrared Receiver Module ❙ DIP ❙ Vout-GND-Vcc

UNIT : mm

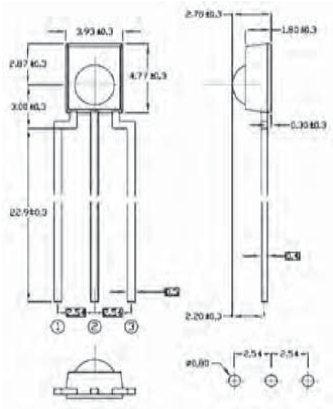

① Output
② GND
③ Vcc

IRM-66xx

Product	Size (LxWxHmm)	λ_P (nm)	Carrier Freq. (KHz)	Supply Voltage (V)	I_{CC} Typ (mA)	L_{Center} (m)	L_{45} (m)
IRM-66xxT	5.87x3.93x2.7	940	36 / 38	2.7~5.5	1	14	6
IRM-66xxM	5.87x3.93x2.7	940	36 / 38 / 40	2.7~5.5	0.4	14	6
IRM-66xxM2	5.87x3.93x2.7	940	40	2.7~5.5	0.4	14	6
IRM-66xxM3	5.87x3.93x2.7	940	36 / 38	2.7~5.5	0.4	14	6
IRM-66xxJ	5.87x3.93x2.7	940	38	2.7~5.5	1	14	6
IRM-66xx	5.87x3.93x2.7	940	38	2.7~5.5	1	14	6
IRM-66xxN3	5.87x3.93x2.7	940	38	2.7~5.5	1	14	6

IRM-S45	IRM-66XXXS45

UNIT : mm

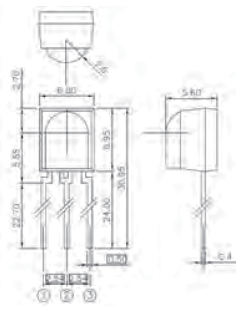

IRM-76xx

Product	Size (LxWxHmm)	λ_P (nm)	Carrier Freq. (KHz)	Supply Voltage (V)	I_{CC} Typ (mA)	L_{Center} (m)	L_{45} (m)
IRM-76xxN3	8.2x6.0x5.6	940	38	2.7~5.5	1	14	6

Infrared Receiver Module ❙ DIP ❙ Vout-GND-Vcc

UNIT : mm

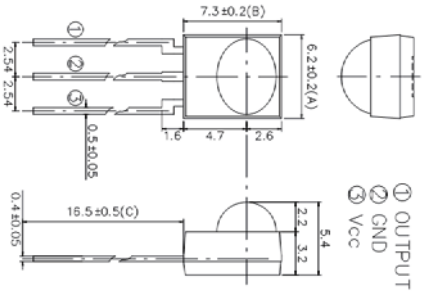

IRM-86xx

Product	Size (LxWxHmm)	λ_P (nm)	Carrier Freq. (KHz)	Supply Voltage (V)	I_{CC} Typ (mA)	L_{Center} (m)	L_{45} (m)
IRM-86xxM2-M	8.9x6.2x5.4	940	38	2.7~5.5	0.4	14	6

IRM-8600	IRM-86XXX8600
	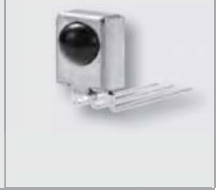

Infrared Receiver Module ▌DIP ▌Vout-Vcc-GND

UNIT : mm

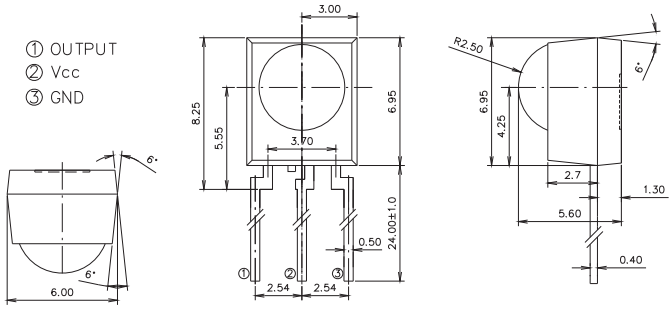

IRM-37xx

Product	Size (LxWxHmm)	λ_P (nm)	Carrier Freq. (KHz)	Supply Voltage (V)	I_{CC} Typ (mA)	L_{Center} (m)	L_{45} (m)
IRM-37xxT	8.25x6.0x5.6	940	36 / 38 / 40 / 56	2.7~5.5	1	14	6
IRM-37xxM	8.25x6.0x5.6	940	36 / 38 / 40	2.7~5.5	0.4	14	6
IRM-37xxM2	8.25x6.0x5.6	940	40	2.7~5.5	0.4	14	6
IRM-37xxM3	8.25x6.0x5.6	940	36 / 38 / 56	2.7~5.5	0.4	14	6
IRM-37xxZ	8.25x6.0x5.6	940	36 / 38 / 56	2.5~5.5	0.3	14	6
IRM-37xx	8.25x6.0x5.6	940	38	2.7~5.5	1	14	6
IRM-37xxN3	8.25x6.0x5.6	940	38	2.7~5.5	1	14	6

IRM-S66	IRM-37XXXS66

UNIT : mm

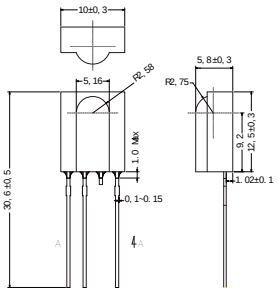

IRM-88xx

Product	Size (LxWxHmm)	λ_P (nm)	Carrier Freq. (KHz)	Supply Voltage (V)	I_{CC} Typ (mA)	L_{Center} (m)	L_{45} (m)
IRM-88xxM3	30.6x10x5.8	940	38	2.7~5.5	0.4	14	6

Infrared Receiver Module ❙ SMD ❙ Side -View

UNIT : mm

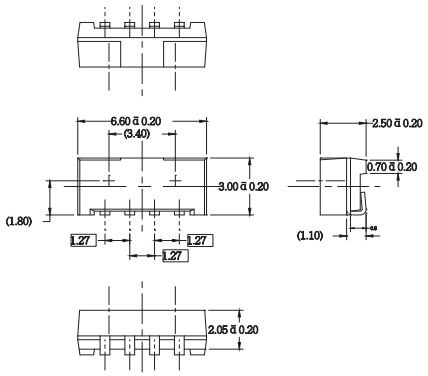

IRM-V3xx

Product	Size (LxWxHmm)	λ_P (nm)	Carrier Freq. (KHz)	Supply Voltage (V)	I_{CC} Typ (mA)	L_{Center} (m)	L_{45} (m)
IRM-V3xxM3	6.6x3x2.5	940	38	2.7~5.5	0.4	14	6

UNIT : mm

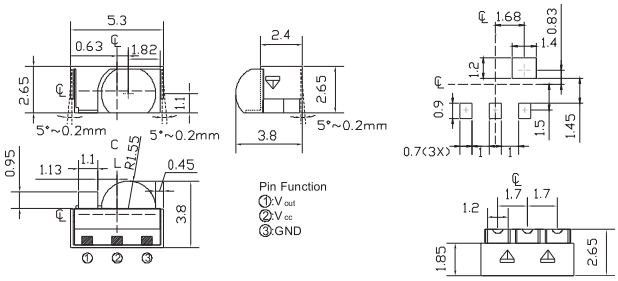

IRM-V5xx

Product	Size (LxWxHmm)	λ_P (nm)	Carrier Freq. (KHz)	Supply Voltage (V)	I_{CC} Typ (mA)	L_{Center} (m)	L_{45} (m)
IRM-V5xxT	5.3x3.8x2.65	940	38	2.7~5.5	1	14	6
IRM-V5xxM	5.3x3.8x2.65	940	36 / 38	2.7~5.5	0.4	14	6
IRM-V5xxM2	5.3x3.8x2.65	940	36 / 38 / 40	2.7~5.5	0.4	14	6
IRM-V5xxM3	5.3x3.8x2.65	940	36 / 38	2.7~5.5	0.4	14	6
IRM-V5xx	5.3x3.8x2.65	940	38	2.7~5.5	1	14	6

Infrared Receiver Module ▌SMD ▌Side -View

UNIT : mm

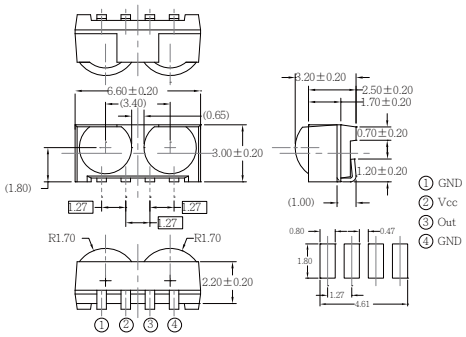

IRM-V8xx

Product	Size (LxWxHmm)	λ_P (nm)	Carrier Freq. (KHz)	Supply Voltage (V)	I_{CC} Typ (mA)	L_{Center} (m)	L_{45} (m)
IRM-V8xxT	6.6x3x3.2	940	36 / 38 / 56	2.7~5.5	1	14	6
IRM-V8xxM	6.6x3x3.2	940	36 / 38	2.7~5.5	0.4	14	6
IRM-V8xxM2	6.6x3x3.2	940	38	2.7~5.5	0.4	14	6
IRM-V8xxM3	6.6x3x3.2	940	36 / 38 / 56	2.7~5.5	0.4	14	6
IRM-V8xxJ	6.6x3x3.2	940	36 / 38	2.7~5.5	1	14	6
IRM-V8xxJ2	6.6x3x3.2	940	36 / 38	2.7~5.5	0.4	14	6

UNIT : mm

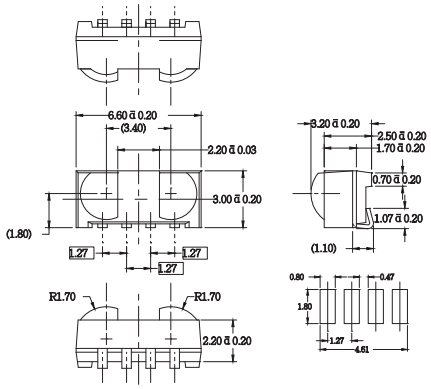

IRM-V8xx-C

Product	Size (LxWxHmm)	λ_P (nm)	Carrier Freq. (KHz)	Supply Voltage (V)	I_{CC} Typ (mA)	L_{Center} (m)	L_{45} (m)
IRM-V8xxM3-C	6.6x3x3.2	940	38	2.7~5.5	0.4	14	6

Infrared Receiver Module ▌SMD ▌Top -View

UNIT : mm

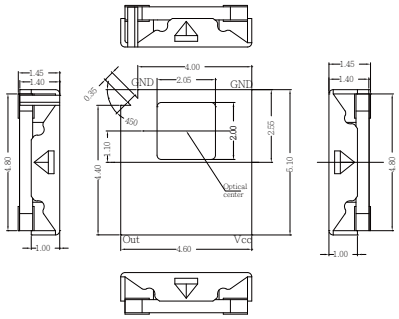

IRM-H2xx

Product	Size (LxWxHmm)	λ_P (nm)	Carrier Freq. (KHz)	Supply Voltage (V)	I_{CC} Typ (mA)	L_{Center} (m)	L_{45} (m)
IRM-H2xxT	5.1x4.6x1.45	940	36 / 38	2.7~5.5	1	14	6
IRM-H2xxM2	5.1x4.6x1.45	940	36 / 38 / 40	2.7~5.5	0.4	14	6
IRM-H2xxM3	5.1x4.6x1.45	940	36 / 38	2.7~5.5	0.4	14	6
IRM-H2xxZ	5.1x4.6x1.45	940	38	2.5~5.5	0.3	14	6

UNIT : mm

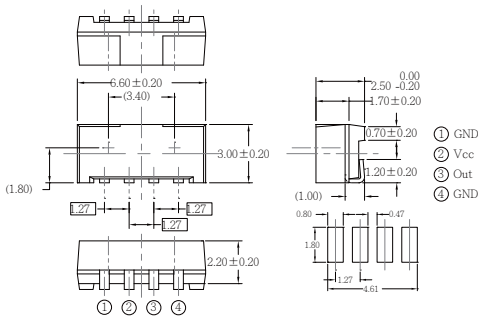

IRM-H3xx

Product	Size (LxWxHmm)	λ_P (nm)	Carrier Freq. (KHz)	Supply Voltage (V)	I_{CC} Typ (mA)	L_{Center} (m)	L_{45} (m)
IRM-H3xxM3	6.6x3x2.5	940	36 / 38	2.7~5.5	0.4	14	6
IRM-H3xxJ	6.6x3x2.5	940	38	2.7~5.5	1	14	6

Infrared Receiver Module ❙ SMD ❙ Top -View

UNIT : mm

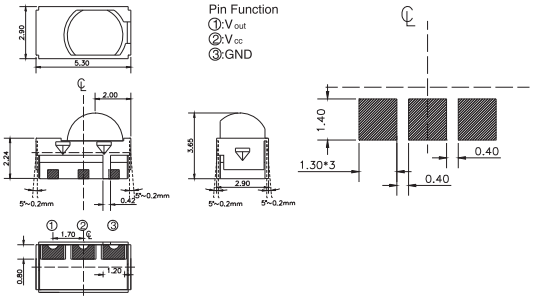

IRM-H5xx

Product	Size (LxWxHmm)	λ_P (nm)	Carrier Freq. (KHz)	Supply Voltage (V)	I_{CC} Typ (mA)	L_{Center} (m)	L_{45} (m)
IRM-H5xxT	5.3x2.9x3.65	940	38	2.7~5.5	1	14	6
IRM-H5xxM	5.3x2.9x3.65	940	38	2.7~5.5	0.4	14	6
IRM-H5xxM3	5.3x2.9x3.65	940	36 / 38	2.7~5.5	0.4	14	6
IRM-H5xx	5.3x2.9x3.65	940	36 / 38	2.7~5.5	1	14	6

UNIT : mm

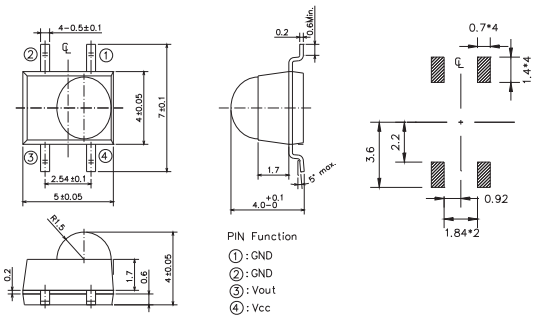

IRM-H6xx

Product	Size (LxWxHmm)	λ_P (nm)	Carrier Freq. (KHz)	Supply Voltage (V)	I_{CC} Typ (mA)	L_{Center} (m)	L_{45} (m)
IRM-H6xxT	5x4x4	940	38	2.7~5.5	1	14	6
IRM-H6xxM	5x4x4	940	36 / 38	2.7~5.5	0.4	14	6
IRM-H6xxM3	5x4x4	940	36 / 38	2.7~5.5	0.4	14	6
IRM-H6xx	5x4x4	940	38	2.7~5.5	1	14	6

Infrared Receiver Module ❙ SMD ❙ Top -View

UNIT : mm

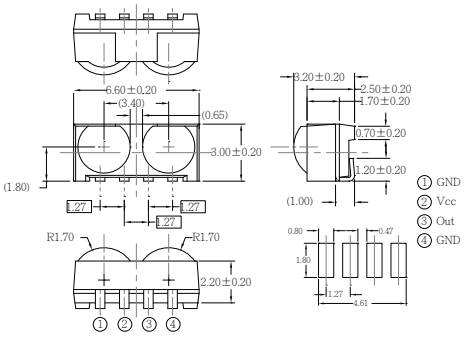

IRM-H8xx

Product	Size (LxWxHmm)	λ_P (nm)	Carrier Freq. (KHz)	Supply Voltage (V)	I_{CC} Typ (mA)	L_{Center} (m)	L_{45} (m)
IRM-H8xxM	6.6x3x3.2	940	36 / 38 / 56	2.7~5.5	0.4	14	6
IRM-H8xxM3	6.6x3x3.2	940	36 / 38 / 56	2.7~5.5	0.4	14	6
IRM-H8xxJ	6.6x3x3.2	940	36 / 38	2.7~5.5	1	14	6

UNIT : mm

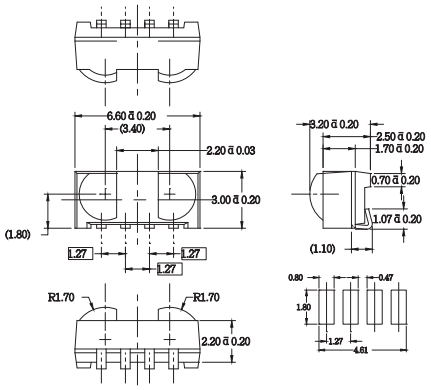

IRM-H8xx-C

Product	Size (LxWxHmm)	λ_P (nm)	Carrier Freq. (KHz)	Supply Voltage (V)	I_{CC} Typ (mA)	L_{Center} (m)	L_{45} (m)
IRM-H8xxM3-C	6.6x3x3.2	940	36 / 38 / 56	2.7~5.5	0.4	14	6
IRM-H8xxZ-C	6.6x3x3.2	940	36 / 38	2.5~5.5	0.3	14	6

Infrared Receiver Module ❙ Standard Burst ❙ SMD

UNIT : mm

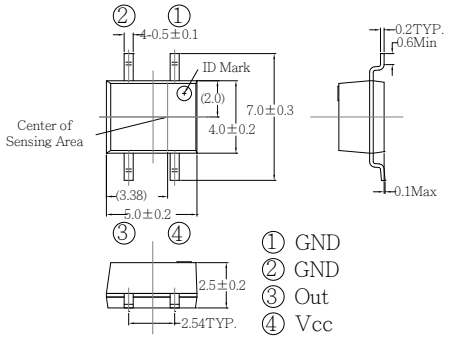

IRM-H9xx

Product	Size (LxWxHmm)	λ_P (nm)	Carrier Freq. (KHz)	Supply Voltage (V)	I_{CC} Typ (mA)	L_{Center} (m)	L_{45} (m)
IRM-H9xxT	5x4x2.5	940	36 / 38 / 40	2.7~5.5	1	14	6
IRM-H9xxM3	5x4x2.5	940	36 / 38	2.7~5.5	0.4	14	6
IRM-H9xx	5x4x2.5	940	38	2.7~5.5	1	14	6

Optic-Fiber Device (Photo Link) ▌Receiver (PLR) Component

UNIT : mm

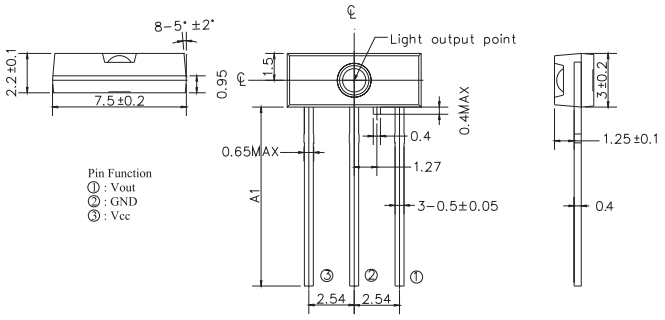

Product	Size (LxWxHmm)	Fiber Coupling Receiver Power_ Max (dBm)	Fiber Coupling Receiver Power_ Min (dBm)	Operation Voltage (V)	Plastic Holder	Trans - mission Speed (Mb/s)	L/F Thicknes (mm)
PLR135	7.5x3x2.2	-14	-27	2.4~5.5	None	16	0.4
PLR233	7.5x3x2.2	-14	-27	2.4~5.5	None	25	0.4

UNIT : mm

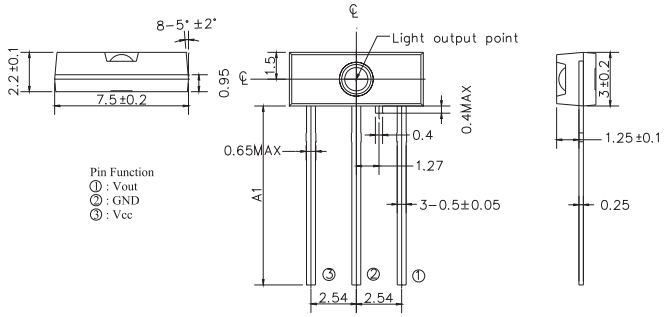

Product	Size (LxWxHmm)	Fiber Coupling Receiver Power_ Max (dBm)	Fiber Coupling Receiver Power_ Min (dBm)	Operation Voltage (V)	Plastic Holder	Trans - mission Speed (Mb/s)	L/F Thicknes (mm)
PLR137	7.5x3x2.2	-14	-27	2.4~5.5	None	16	0.25
PLR237	7.5x3x2.2	-14	-27	2.4~5.5	None	25	0.25

UNIT : mm

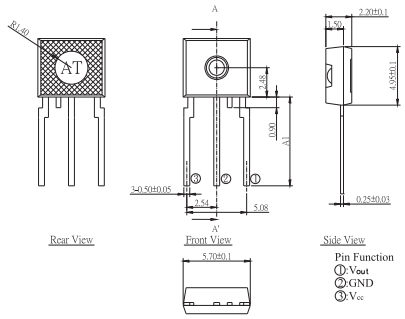

Product	Size (LxWxHmm)	Fiber Coupling Receiver Power_ Max (dBm)	Fiber Coupling Receiver Power_ Min (dBm)	Operation Voltage (V)	Plastic Holder	Trans - mission Speed (Mb/s)	L/F Thicknes (mm)
PLR155	5.7x4.95x2.2	-14	-27	2.4~5.5	None	16	0.25
PLR253	5.7x4.95x2.2	-14	-27	2.4~5.5	None	25	0.25

Optic-Fiber Device (Photo Link) ▌Receiver (PLR) Component

UNIT : mm

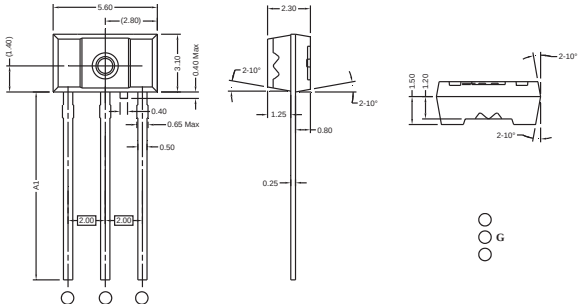

Product	Size (LxWxHmm)	Fiber Coupling Receiver Power_ Max (dBm)	Fiber Coupling Receiver Power_ Min (dBm)	Operation Voltage (V)	Plastic Holder	Trans - mission Speed (Mb/s)	L/F Thicknes (mm)
PLR162	5.6x3.1x2.3	-14	-27	2.4~5.5	None	16	0.25
PLR262	5.6x3.1x2.3	-14	-27	2.4~5.5	None	25	0.25

UNIT : mm

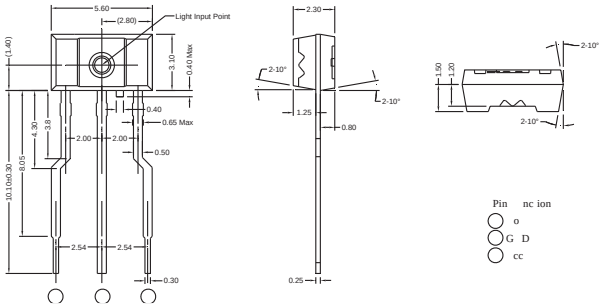

Product	Size (LxWxHmm)	Fiber Coupling Receiver Power_ Max (dBm)	Fiber Coupling Receiver Power_ Min (dBm)	Operation Voltage (V)	Plastic Holder	Trans - mission Speed (Mb/s)	L/F Thicknes (mm)
PLR162M	5.6x3.1x2.3	-14	-27	2.4~5.5	None	16	0.25

Optic-Fiber Device (Photo Link) ▌Receiver (PLR) Module

UNIT : mm

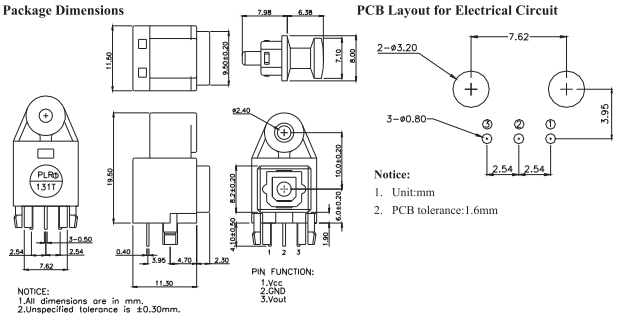

Product	Size (LxWxHmm)	Fiber Coupling Receiver Power_ Max (dBm)	Fiber Coupling Receiver Power_ Min (dBm)	Operation Voltage (V)	Plastic Holder	Trans - mission Speed (Mb/s)	L/F Thicknes (mm)
PLR135/T	11.5x13.6x19.5	-14	-27	2.4~5.5	Yes	16	0.4

UNIT : mm

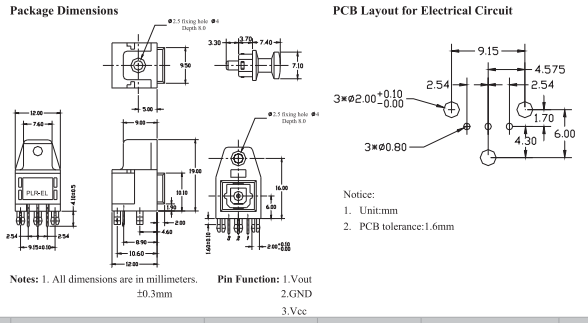

Product	Size (LxWxHmm)	Fiber Coupling Receiver Power_ Max (dBm)	Fiber Coupling Receiver Power_ Min (dBm)	Operation Voltage (V)	Plastic Holder	Trans - mission Speed (Mb/s)	L/F Thicknes (mm)
PLR135/T2	12.0x14.0x19.0	-14	-27	2.4~5.5	Yes	16	0.4

UNIT : mm

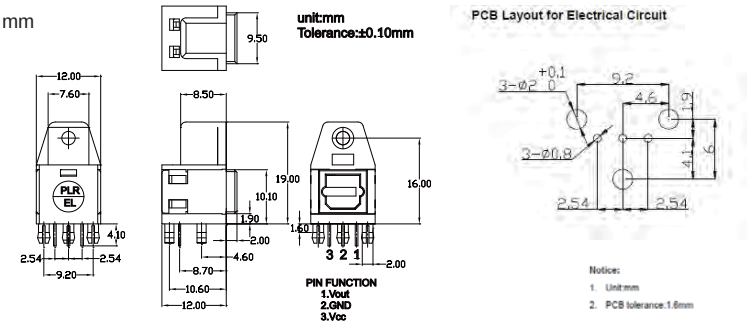

Product	Size (LxWxHmm)	Fiber Coupling Receiver Power_ Max (dBm)	Fiber Coupling Receiver Power_ Min (dBm)	Operation Voltage (V)	Plastic Holder	Trans - mission Speed (Mb/s)	L/F Thicknes (mm)
PLR135/T5	12.0x14.0x19.0	-14	-27	2.4~5.5	Yes	16	0.4

Optic-Fiber Device (Photo Link) ❙ Receiver (PLR) Module

UNIT : mm

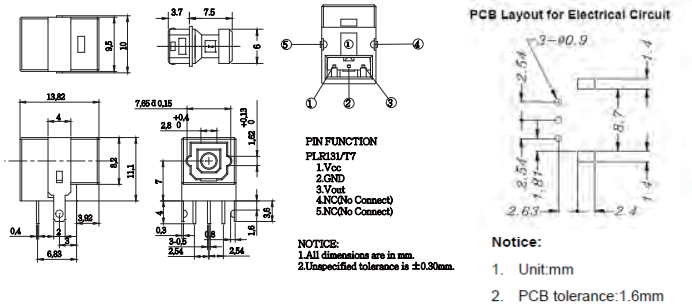

Product	Size (LxWxHmm)	Fiber Coupling Receiver Power_ Max (dBm)	Fiber Coupling Receiver Power_ Min (dBm)	Operation Voltage (V)	Plastic Holder	Trans - mission Speed (Mb/s)	L/F Thicknes (mm)
PLR135/T7	10.0x13.82x11.1	-14	-27	2.4~5.5	Yes	16	0.4

UNIT : mm

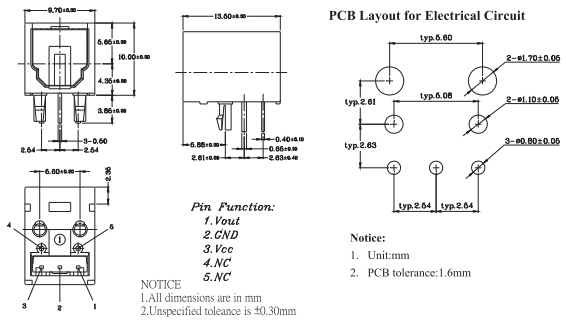

Product	Size (LxWxHmm)	Fiber Coupling Receiver Power_ Max (dBm)	Fiber Coupling Receiver Power_ Min (dBm)	Operation Voltage (V)	Plastic Holder	Trans - mission Speed (Mb/s)	L/F Thicknes (mm)
PLR135/T8	9.7x13.5x10	-14	-27	2.4~5.5	Yes	16	0.4

Optic-Fiber Device (Photo Link) ❙ Receiver (PLR) Module

UNIT : mm

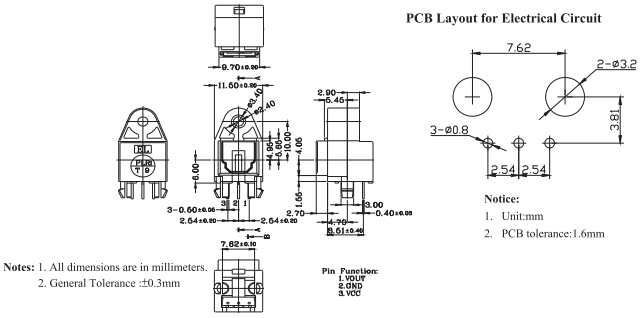

Product	Size (LxWxHmm)	Fiber Coupling Receiver Power_ Max (dBm)	Fiber Coupling Receiver Power_ Min (dBm)	Operation Voltage (V)	Plastic Holder	Trans - mission Speed (Mb/s)	L/F Thicknes (mm)
PLR135/T9	11.5x14x20	-14	-27	2.4~5.5	Yes	16	0.4

UNIT : mm

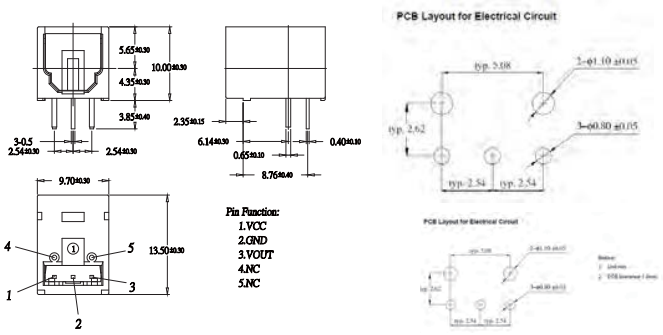

Product	Size (LxWxHmm)	Fiber Coupling Receiver Power_ Max (dBm)	Fiber Coupling Receiver Power_ Min (dBm)	Operation Voltage (V)	Plastic Holder	Trans - mission Speed (Mb/s)	L/F Thicknes (mm)
PLR135/T10	9.7x13.5x10.0	-14	-27	2.4~5.5	Yes	16	0.4

Optic-Fiber Device (Photo Link) ❙ Transmitter (PLT) Component

UNIT : mm

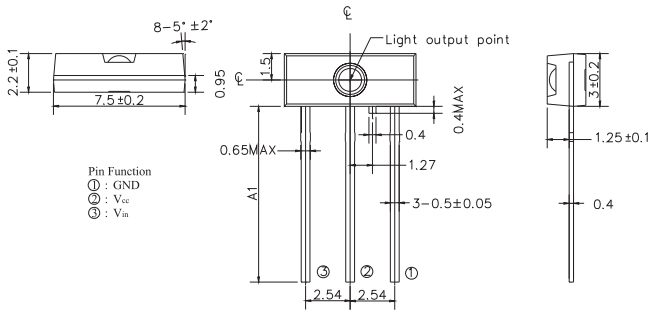

Product	Size (LxWxHmm)	Fiber Coupling Output Power_Max (dBm)	Fiber Coupling Output Power_Min (dBm)	Operation Voltage (V)	Plastic Holder	Trans - mission Speed (Mb/s)	L/F Thicknes (mm)
PLT132	7.5x3x2.2	-15	-21	3~5	None	16	0.4
PLT232/L5	7.5x3x2.2	-15	-21	3~5	None	25	0.4

UNIT : mm

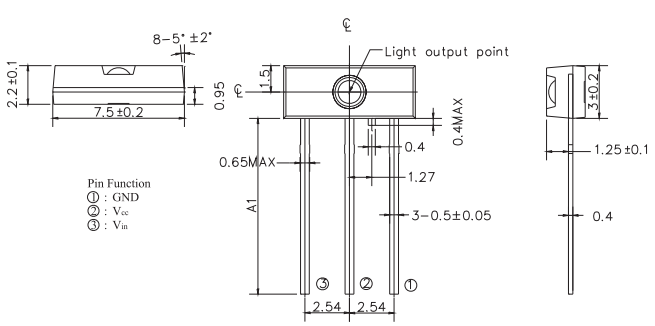

Product	Size (LxWxHmm)	Fiber Coupling Output Power_Max (dBm)	Fiber Coupling Output Power_Min (dBm)	Operation Voltage (V)	Plastic Holder	Trans - mission Speed (Mb/s)	L/F Thicknes (mm)
PLT133	7.5x3x2.2	-15	-21	3~5	None	16	0.4

UNIT : mm

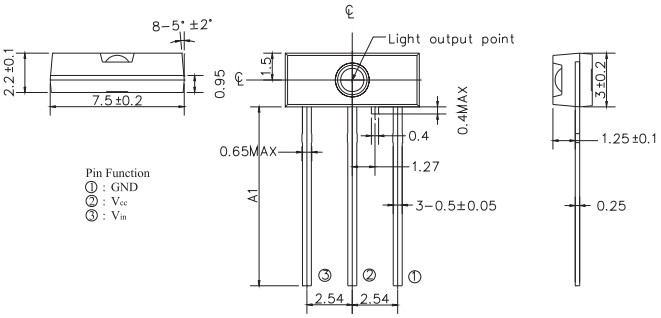

Product	Size (LxWxHmm)	Fiber Coupling Output Power_Max (dBm)	Fiber Coupling Output Power_Min (dBm)	Operation Voltage (V)	Plastic Holder	Trans - mission Speed (Mb/s)	L/F Thicknes (mm)
PLT137	7.5x3x2.2	-15	-21	3~5	None	16	0.25
PLT237	7.5x3x2.2	-15	-21	3~5	None	25	0.25

Optic-Fiber Device (Photo Link) ❙ Transmitter (PLT) Component

UNIT : mm

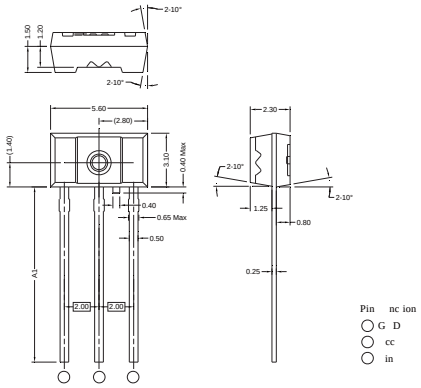

Product	Size (LxWxHmm)	Fiber Coupling Output Power_Max (dBm)	Fiber Coupling Output Power_Min (dBm)	Operation Voltage (V)	Plastic Holder	Trans - mission Speed (Mb/s)	L/F Thicknes (mm)
PLT262	5.6x3.1x2.3	-15	-21	3~5	None	25	0.25

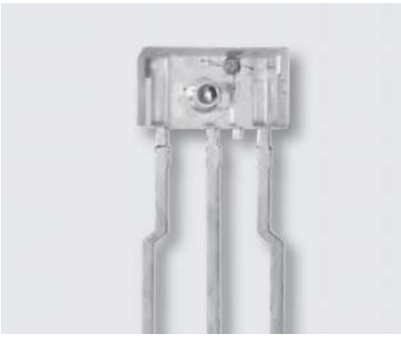

UNIT : mm

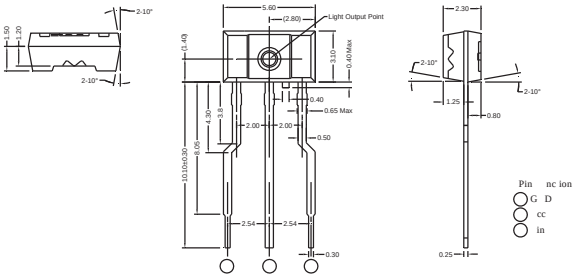

Product	Size (LxWxHmm)	Fiber Coupling Output Power_Max (dBm)	Fiber Coupling Output Power_Min (dBm)	Operation Voltage (V)	Plastic Holder	Trans - mission Speed (Mb/s)	L/F Thicknes (mm)
PLT262M	5.6x3.1x2.3	-15	-21	3~5	None	25	0.25

UNIT : mm

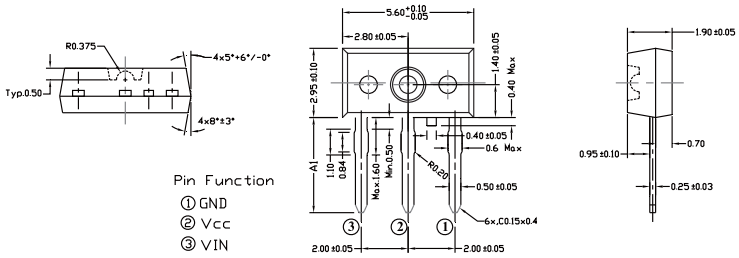

Product	Size (LxWxHmm)	Fiber Coupling Output Power_Max (dBm)	Fiber Coupling Output Power_Min (dBm)	Operation Voltage (V)	Plastic Holder	Trans - mission Speed (Mb/s)	L/F Thicknes (mm)
PLT272/L5	5.6x2.95x1.9	-15	-21	3~5	None	25	0.25

Optic-Fiber Device (Photo Link) ❙ Transmitter (PLT) Module

UNIT : mm

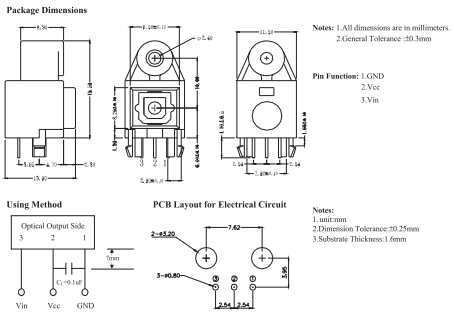

Product	Size (LxWxHmm)	Fiber Coupling Output Power_Max (dBm)	Fiber Coupling Output Power_Min (dBm)	Operation Voltage (V)	Plastic Holder	Trans - mission Speed (Mb/s)	L/F Thicknes (mm)
PLT133/T	11.5x13.6x19.5	-15	-21	3~5	Yes	16	0.4

UNIT : mm

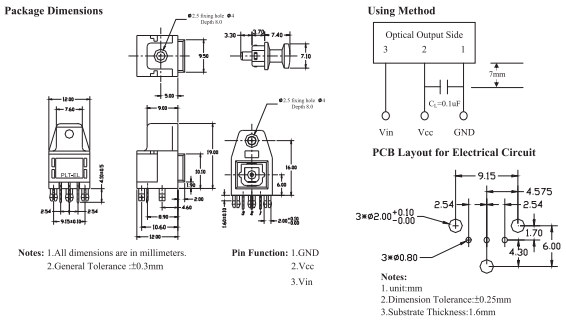

Product	Size (LxWxHmm)	Fiber Coupling Output Power_Max (dBm)	Fiber Coupling Output Power_Min (dBm)	Operation Voltage (V)	Plastic Holder	Trans - mission Speed (Mb/s)	L/F Thicknes (mm)
PLT133/T2	12.0x14.0x19.0	-15	-21	3~5	Yes	16	0.4

UNIT : mm

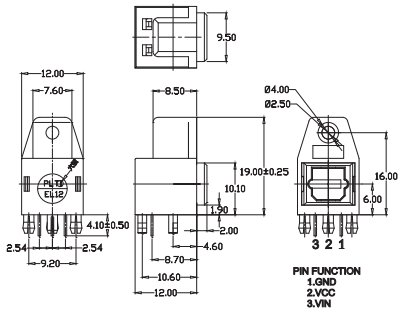

Product	Size (LxWxHmm)	Fiber Coupling Output Power_Max (dBm)	Fiber Coupling Output Power_Min (dBm)	Operation Voltage (V)	Plastic Holder	Trans - mission Speed (Mb/s)	L/F Thicknes (mm)
PLT133/T5P	12.0x14.0x19.0	-15	-21	3~5	Yes	16	0.4

Optic-Fiber Device (Photo Link) ❙ Transmitter (PLT) Module

UNIT : mm

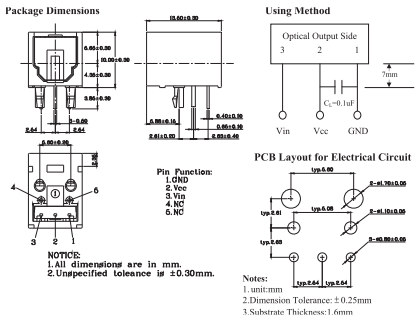

Product	Size (LxWxHmm)	Fiber Coupling Output Power_Max (dBm)	Fiber Coupling Output Power_Min (dBm)	Operation Voltage (V)	Plastic Holder	Trans - mission Speed (Mb/s)	L/F Thicknes (mm)
PLT133/T8B	9.7x13.5x10	-15	-21	3~5	Yes	16	0.4

UNIT : mm

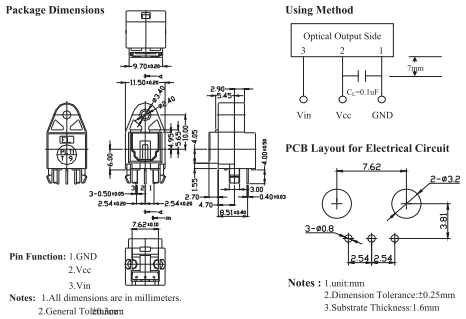

Product	Size (LxWxHmm)	Fiber Coupling Output Power_Max (dBm)	Fiber Coupling Output Power_Min (dBm)	Operation Voltage (V)	Plastic Holder	Trans - mission Speed (Mb/s)	L/F Thicknes (mm)
PLT133/T9	11.5x13.5x20	-15	-21	3~5	Yes	16	0.4

UNIT : mm

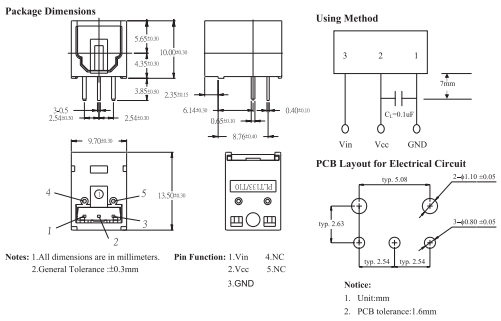

Product	Size (LxWxHmm)	Fiber Coupling Output Power_Max (dBm)	Fiber Coupling Output Power_Min (dBm)	Operation Voltage (V)	Plastic Holder	Trans - mission Speed (Mb/s)	L/F Thicknes (mm)
PLT133/T10B	9.7x13.5x10.0	-15	-21	3~5	Yes	16	0.4
PLT133/T10W	9.7x13.5x10.0	-15	-21	3~5	Yes	16	0.4

Optical Sensors ▌Ambient Light Sensor ▌Analog

UNIT : mm

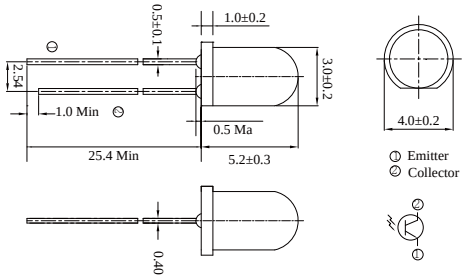

Product	Size (mm)	Supply Voltage (V)	Sensitivity λ_P (nm)	Range λ (nm)	Light current (uA) Ev=100lux	I_D_Max (μA)	Rise / Fall Time (μs)
ALS-PT204-6C/L177	3	2.5~5.5	630	370~670	15~100	0.1	110 / 120

UNIT : mm

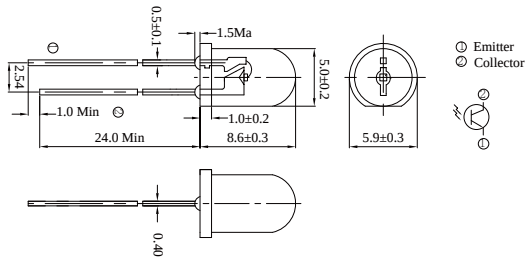

Product	Size (mm)	Supply Voltage (V)	Sensitivity λ_P (nm)	Range λ (nm)	Light current (uA) Ev=100lux	I_D_Max (μA)	Rise / Fall Time (μs)
ALS-PT333-3C/L177	5	2.5~5.5	560	390~700	90~160	0.1	80 / 90

UNIT : mm

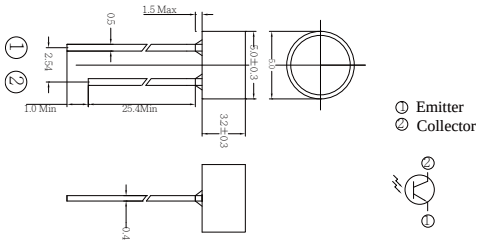

Product	Size (mm)	Supply Voltage (V)	Sensitivity λ_P (nm)	Range λ (nm)	Light current (uA) Ev=100lux	I_D_Max (μA)	Rise / Fall Time (μs)
ALS-PT243-3C/L177	5	2.5~5.5	630	390~700	min. 7uA	0.1	110 / 220

Optical Sensors ▌Ambient Light Sensor ▌Analog

UNIT : mm

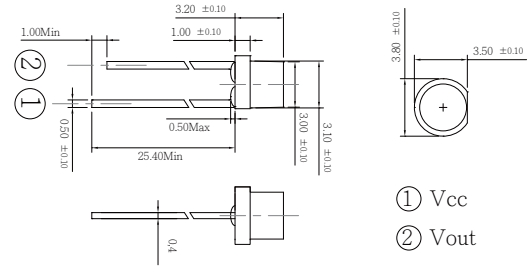

Product	Size (mm)	Supply Voltage (V)	Sensitivity λ_P (nm)	Range λ (nm)	Light current (uA) Ev=100lux	I_D_Max (μA)	Rise / Fall Time (μs)
ALS-PDIC144-6C/L378	3	1.8~5.5	550	390~700	22~44	0.1	360 / 1130

UNIT : mm

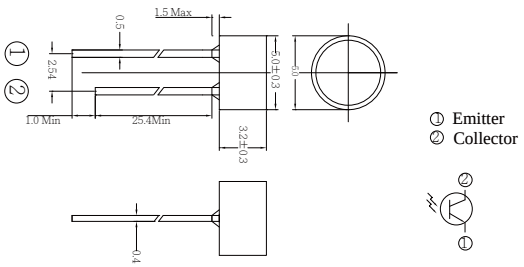

Product	Size (mm)	Supply Voltage (V)	Sensitivity λ_P (nm)	Range λ (nm)	Light current (uA) Ev=100lux	I_D_Max (μA)	Rise / Fall Time (μs)
ALS-PDIC243-3C	5	1.8~5.5	560	390~700	24~48	0.1	360 / 1130

UNIT : mm

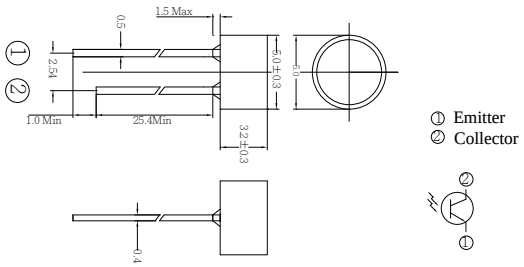

Product	Size (mm)	Supply Voltage (V)	Sensitivity λ_P (nm)	Range λ (nm)	Light current (uA) Ev=100lux	I_D_Max (μA)	Rise / Fall Time (μs)
ALS-PDIC243-3B	5	1.8~5.5	560	390~700	10~35	0.1	360 / 1130
ALS-PDIC243-3B/L525	5	1.8~5.5	560	390~700	5~15	0.1	360 / 1130

Optical Sensors ▌Ambient Light Sensor ▌Analog

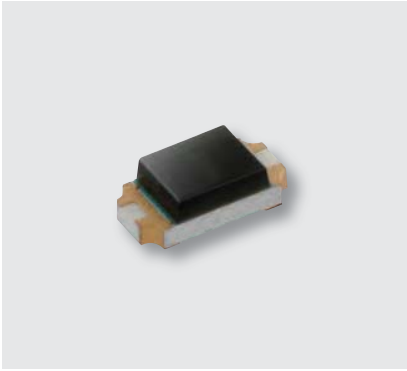

UNIT : mm

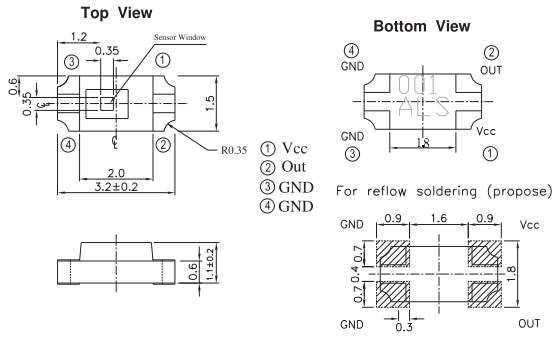

Product	Size (LxWxHmm)	Supply Voltage (V)	Sensitivity λ_P (nm)	Range λ (nm)	Light current (uA) Ev=100lux	I_D_Max (μA)	Rise / Fall Time (μs)
ALS-PDIC15-21B/TR8	3.2x1.5x1.1	1.8~5.5	550	390~700	5~10	0.1	360 / 1130

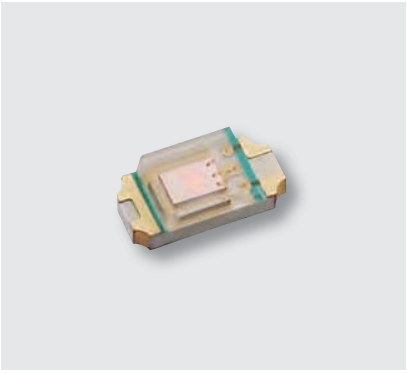

UNIT : mm

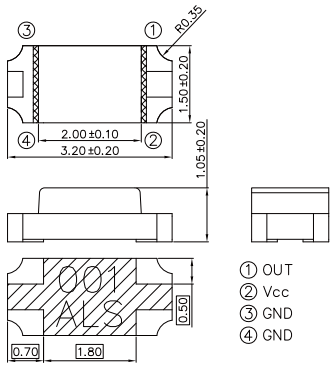

Product	Size (LxWxHmm)	Supply Voltage (V)	Sensitivity λ_P (nm)	Range λ (nm)	Light current (uA) Ev=100lux	I_D_Max (μA)	Rise / Fall Time (μs)
ALS-PDIC15-21C/L230/TR8	3.2x1.5x1.1	2.5~5.5	590	390~700	36~95	0.1	360 / 1130

UNIT : mm

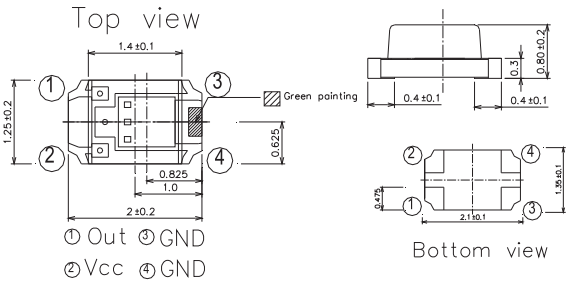

Product	Size (LxWxHmm)	Supply Voltage (V)	Sensitivity λ_P (nm)	Range λ (nm)	Light current (uA) Ev=100lux	I_D_Max (μA)	Rise / Fall Time (μs)
ALS-PDIC17-55C/TR8	2x1.25x0.8	1.8~5.5	590	390~700	27~54	0.1	360 / 1130

Optical Sensors ▌Ambient Light Sensor ▌Analog

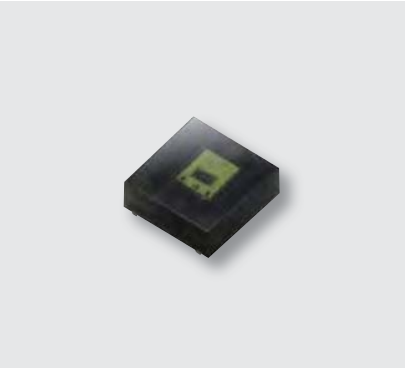

UNIT : mm

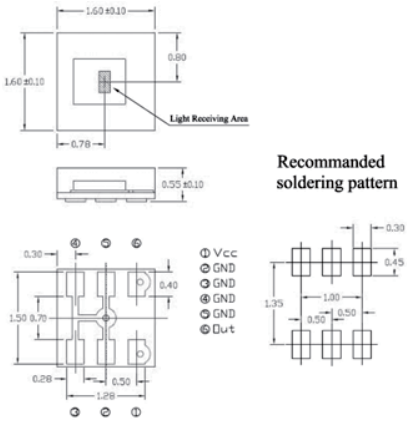

Product	Size (LxWxHmm)	Supply Voltage (V)	Sensitivity λ_P (nm)	Range λ (nm)	Light current (uA) Ev=100lux	I_D_Max (μA)	Rise / Fall Time (μs)
ALS-PDIC17-77B/TR8	1.6x1.6x0.55	1.8~5.5	550	390~700	40~80	0.1	75 / 200

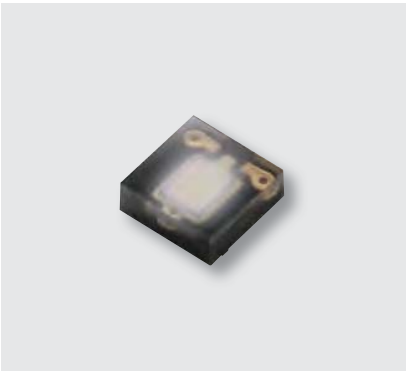

UNIT : mm

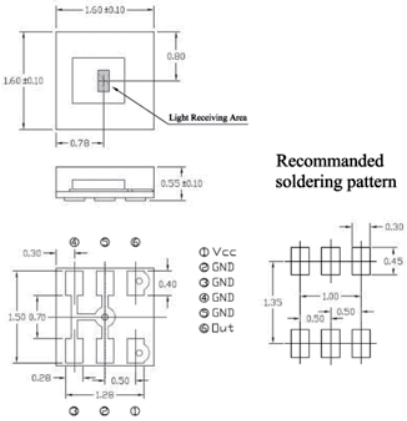

Product	Size (LxWxHmm)	Supply Voltage (V)	Sensitivity λ_P (nm)	Range λ (nm)	Light current (uA) Ev=100lux	I_D_Max (μA)	Rise / Fall Time (μs)
ALS-PDIC17-77C/TR8	1.6x1.6x0.55	1.8~5.5	550	390~700	27~54	0.1	360 / 1130

UNIT : mm

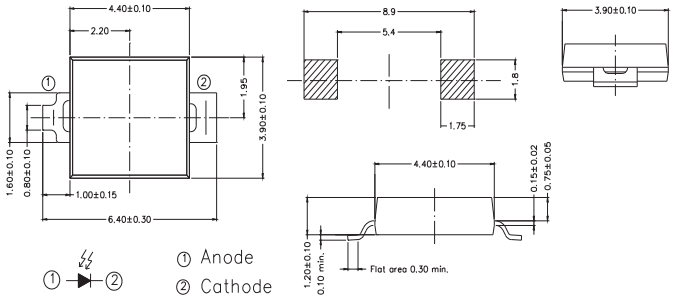

Product	Size (LxWxHmm)	Supply Voltage (V)	Sensitivity λ_P (nm)	Range λ (nm)	Light current (uA) Ev=100lux	I_D_Max (μA)	Rise / Fall Time (μs)
ALS-PD70-01C/TR7	4.4x3.9x1.2	2.5~5.5	630	390~700	1.1	0.01	-- / --
ALS-PD70-01C/L664/TR7	4.4x3.9x1.2	2.5~5.5	540	400~640	0.25	0.01	-- / --

Optical Sensors ▌Ambient Light Sensor ▌Analog

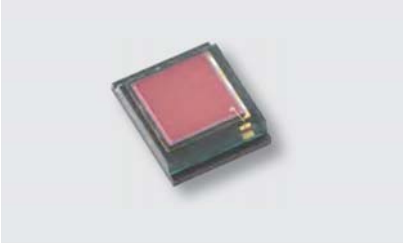

UNIT : mm

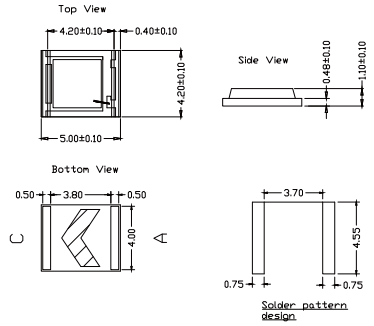

Product	Size (LxWxHmm)	Supply Voltage (V)	Sensitivity λ_P (nm)	Range λ (nm)	Light current (uA) Ev=100lux	I_D_Max (μA)	Rise / Fall Time (μs)
ALS-PD50-42C/TR8	5.0x4.2x1.1	2.5~5.5	550	400~650	0.8	0.03	-- / --

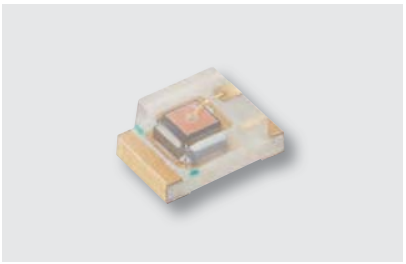

UNIT : mm

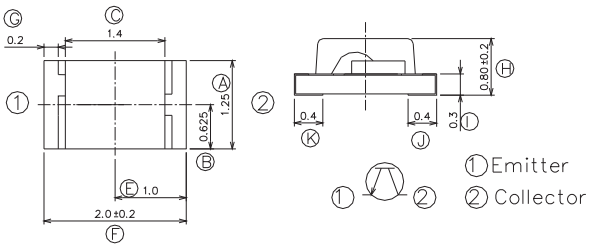

Product	Size (LxWxHmm)	Supply Voltage (V)	Sensitivity λ_P (nm)	Range λ (nm)	Light current (uA) Ev=100lux	I_D_Max (μA)	Rise / Fall Time (μs)
ALS-PT17-51C/L177/TR8	2.00×1.25×0.80	2.5~5.5	630	390~700	4~11	0.1	110 / 220

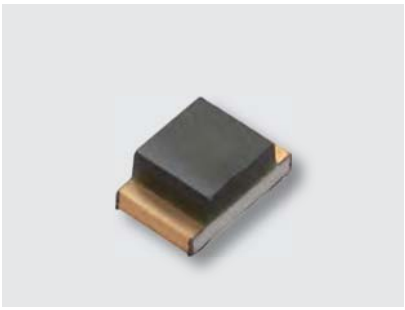

UNIT : mm

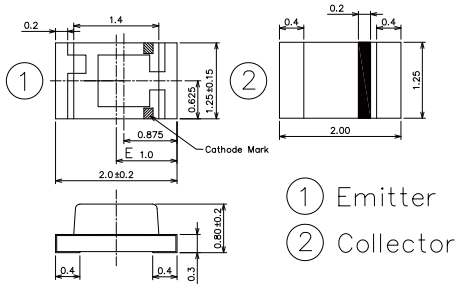

Product	Size (LxWxHmm)	Supply Voltage (V)	Sensitivity λ_P (nm)	Range λ (nm)	Light current (uA) Ev=50lux	I_D_Max (μA)	Rise / Fall Time (μs)
ALS-PT17-51NB/L369/TR8	2.00×1.25×0.80	1.8~5.5	580	400~700	3.5~7	0.1	130 / 150

UNIT : mm

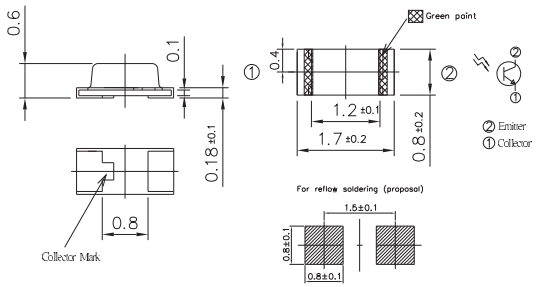

Product	Size (LxWxHmm)	Supply Voltage (V)	Sensitivity λ_P (nm)	Range λ (nm)	Light current (uA) Ev=100lux	I_D_Max (μA)	Rise / Fall Time (μs)
ALS-PT19-315C/L177/TR8	1.7×0.8×0.8	2.5~5.5	630	390~700	min. 5uA	0.1	110 / 220

Optical Sensors ▌Proximity Sensor ▌Digital

UNIT : mm

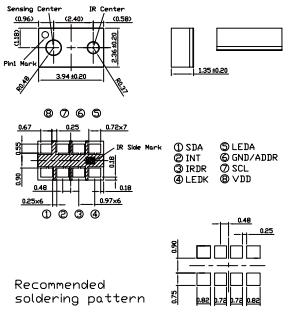

Product	Size (LxWxHmm)	Supply Voltage (V)	Supply Current (uA)	Features			
				Function	ADC resolution	Detection range	Emitting wavelength (nm)
APM-12D23-20-DF8/TR8	3.94x2.36x1.35	2.3~3.6V	I_{DD_ALS} = 80 I_{DD_PS} = 90 without $I_{_LED}$ I_{DD_OFF} =0.1	Ambient light sensing Proximity Sensing IR emitter embedded	12 bit 8 bit	0.012~800 lux up to 10 cm	850nm
PM-8D23-20-DF8/TR8	3.94x2.36x1.35	2.3~3.6V	I_{DD_PS} = 85 without $I_{_LED}$ I_{DD_OFF} =0.01	Proximity Sensing IR emitter embedded	8 bit	up to 10 cm	850nm

UNIT : mm

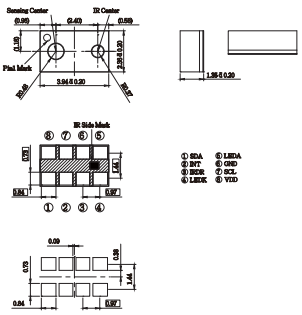

Product	Size (LxWxHmm)	Supply Voltage (V)	Supply Current (uA)	Features			
				Function	ADC resolution	Detection range	Emitting wavelength (nm)
APM-16D18-00-DF8/TR8	3.94x2.36x1.35	1.7~3.5V	I_{DD_ALS} = 130 I_{DD_PS} = 175 without $I_{_LED}$ I_{DD_OFF} =0.1	Ambient light sensing Proximity Sensing IR emitter embedded	10~16 bit 16 bit	0.08m~42K lux up to 10 cm	850nm

Optical Sensors ▌RGB Color Sensor ▌Single Color Sensor (Analog)

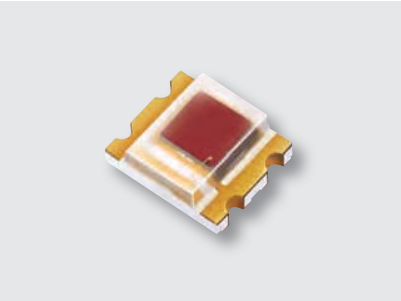

UNIT : mm

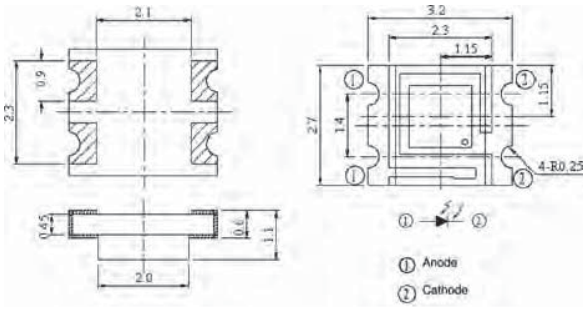

Product	Size (LxWxHmm)	Sensitivity λ_P (nm)	V_F (V)	Revers light current (Ee=100lux) / IL(1) (μA)	Revers light current (Ee=1000lux) IL(2) (μA)
CLS15-22C/L213R/TR8	3.2x2.7x1.1	620	0.5~1.3	0.091	0.83

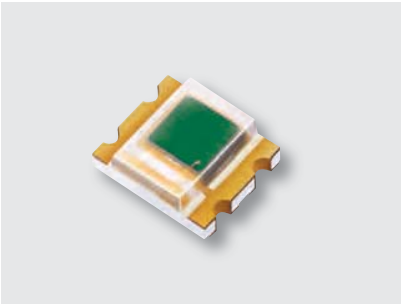

UNIT : mm

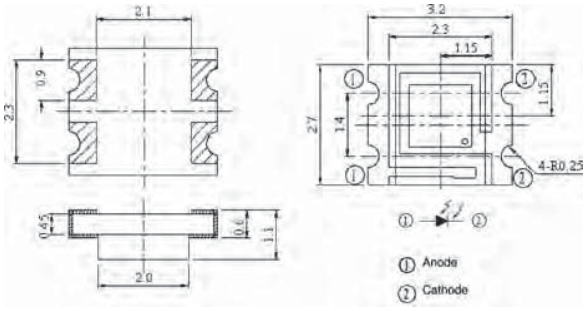

Product	Size (LxWxHmm)	Sensitivity λ_P (nm)	V_F (V)	Revers light current (Ee=100lux) / IL(1) (μA)	Revers light current (Ee=1000lux) IL(2) (μA)
CLS15-22C/L213G/TR8	3.2x2.7x1.1	550	0.5~1.3	0.082	0.72

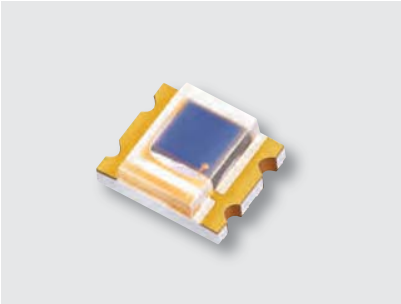

UNIT : mm

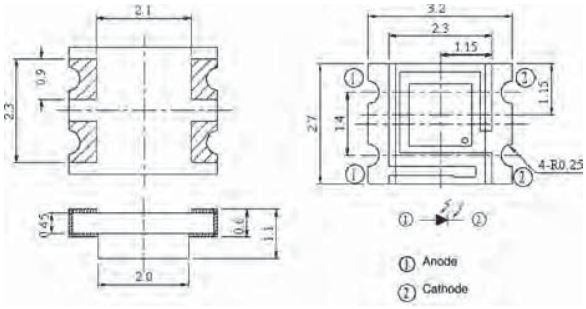

Product	Size (LxWxHmm)	Sensitivity λ_P (nm)	V_F (V)	Revers light current (Ee=100lux) / IL(1) (μA)	Revers light current (Ee=1000lux) IL(2) (μA)
CLS15-22C/L213B/TR8	3.2x2.7x1.1	470	0.5~1.3	0.046	0.39

Optical Sensors ▌Reflective Sensor

UNIT : mm

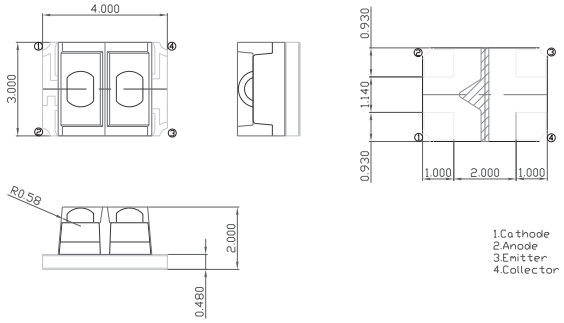

Product	Size (LxWxHmm)	V_F_Typ (V)	V_F_Max (V)	$V_{CE(SAT)}$_Max (V)	$I_{C(ON)}$_Min (mA)	I_{CEO} _Max. (nA)
ITR1502SR40A/TR8	4.0x3.0x2.0	1.2	1.4	--	0.06	100

UNIT : mm

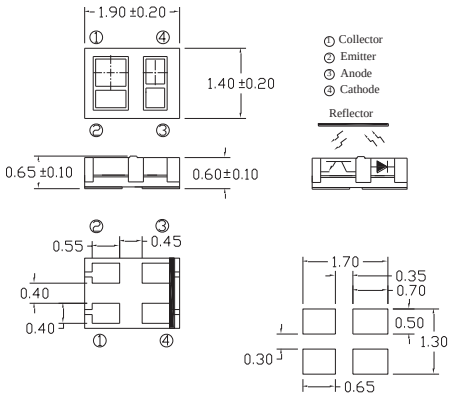

Product	Size (LxWxHmm)	V_F_Typ (V)	V_F_Max (V)	$V_{CE(SAT)}$_Max (V)	$I_{C(ON)}$_Min (mA)	I_{CEO} _Max. (nA)
ITR1504SR10A/TR	1.9x1.4x0.65	1.25	1.5	0.4	0.13	1000

Optical Sensors ❙ Reflective Sensor

UNIT : mm

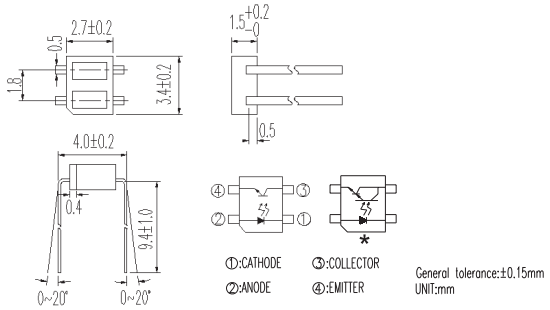

Product	Size (LxWxHmm)	V_F_Typ (V)	V_F_Max (V)	$V_{CE(SAT)}$_Max (V)	$I_{C(ON)}$_Min (mA)	I_{CEO} _Max. (nA)
ITR8307/F43	3.4x2.7x1.5	1.2	1.6	0.4	0.1	100
*ITR8307/L24/F43	3.4x2.7x1.5	1.2	1.4	--	0.5	1000

Star mark * : Please refer to the schematic of Pin configuration with " * " mark.

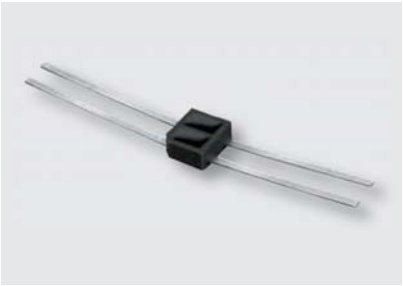

UNIT : mm

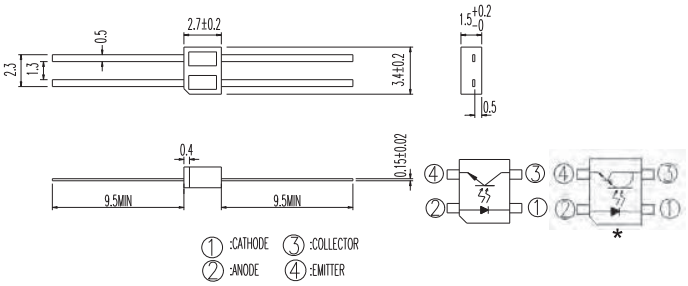

Product	Size (LxWxHmm)	V_F_Typ (V)	V_F_Max (V)	$V_{CE(SAT)}$_Max (V)	$I_{C(ON)}$_Min (mA)	I_{CEO} _Max. (nA)
ITR8307	3.4x2.7x1.5	1.2	1.6	0.4	0.1	100
*ITR8307/L24	3.4x2.7x1.5	1.2	1.4	--	0.5	1000

Star mark * : Please refer to the schematic of Pin configuration with " * " mark.

UNIT : mm

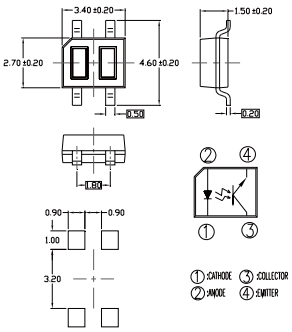

Product	Size (LxWxHmm)	V_F_Typ (V)	V_F_Max (V)	$V_{CE(SAT)}$_Max (V)	$I_{C(ON)}$_Min (mA)	I_{CEO} _Max. (nA)
ITR1201SR10AR/TR	3.4x2.7x1.5	1.2	1.4	--	0.1	100

Optical Sensors ❙ Reflective Sensor

UNIT : mm

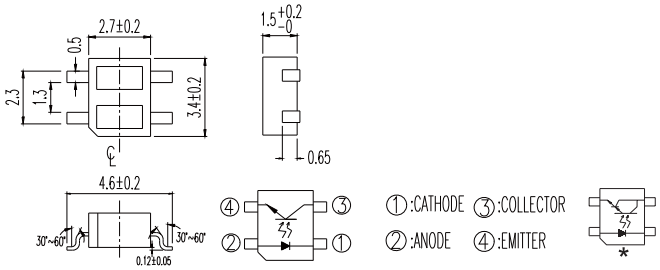

Product	Size (LxWxHmm)	V_F_Typ (V)	V_F_Max (V)	$V_{CE(SAT)}$_Max (V)	$I_{C(ON)}$_Min (mA)	I_{CEO} _Max. (nA)
*ITR8307/L24/TR8	3.4x2.7x1.5	1.2	1.4	--	0.5	1000
ITR8307/TR8	3.4x2.7x1.5	1.2	1.6	0.4	0.1	100

Star mark * : Please refer to the schematic of Pin configuration with " * " mark.

UNIT : mm

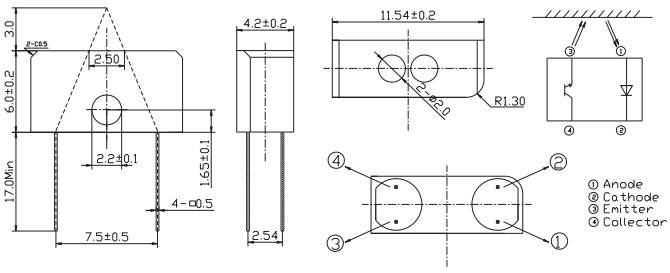

Product	Size (LxWxHmm)	V_F_Typ (V)	V_F_Max (V)	$V_{CE(SAT)}$_Max (V)	$I_{C(ON)}$_Min (mA)	I_{CEO} _Max. (nA)
ITR9904	11.54x4.2x6	1.2	1.5	0.4	0.1	100

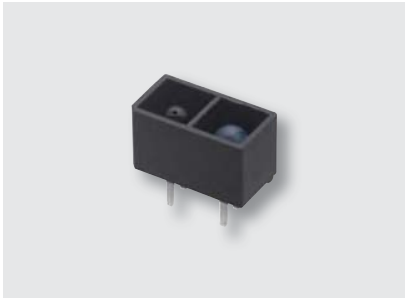

UNIT : mm

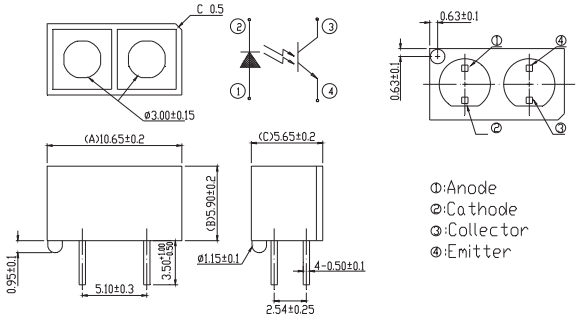

Product	Size (LxWxHmm)	V_F_Typ (V)	V_F_Max (V)	$V_{CE(SAT)}$_Max (V)	$I_{C(ON)}$_Min (mA)	I_{CEO} _Max. (nA)
ITR9908	10.65x5.65x5.9	1.2	1.5	0.4	0.5	100

Optical Sensors ❙ Reflective Sensor

UNIT : mm

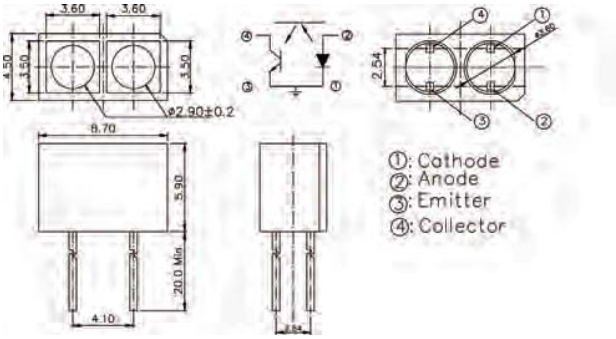

Product	Size (LxWxHmm)	V_F_Typ (V)	V_F_Max (V)	$V_{CE(SAT)}$_Max (V)	$I_{C(ON)}$_Min (mA)	I_{CEO} _Max. (nA)
ITR9909	8.7x4.5x5.9	1.2	1.5	0.4	0.2	100

UNIT : mm

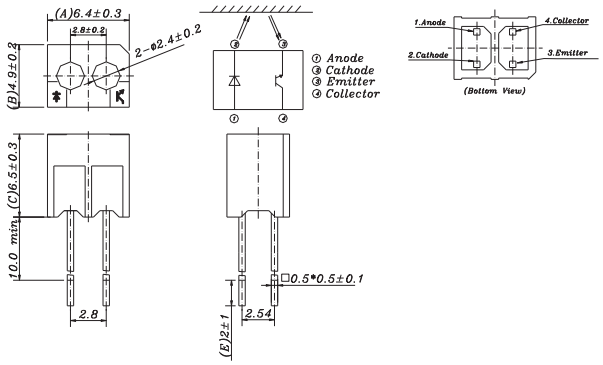

Product	Size (LxWxHmm)	V_F_Typ (V)	V_F_Max (V)	$V_{CE(SAT)}$_Max (V)	$I_{C(ON)}$_Min (mA)	I_{CEO} _Max. (nA)
ITR20001/T	6.4x4.9x6.5	1.2	1.5	0.4	0.2	100

UNIT : mm

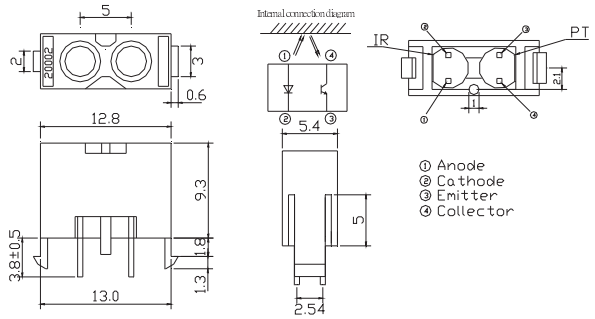

Product	Size (LxWxHmm)	V_F_Typ (V)	V_F_Max (V)	$V_{CE(SAT)}$_Max (V)	$I_{C(ON)}$_Min (mA)	I_{CEO} _Max. (nA)
ITR20002	12.8x5.4x9.3	1.2	1.5	0.4	0.04	100

Optical Sensors ❙ Reflective Sensor

UNIT : mm

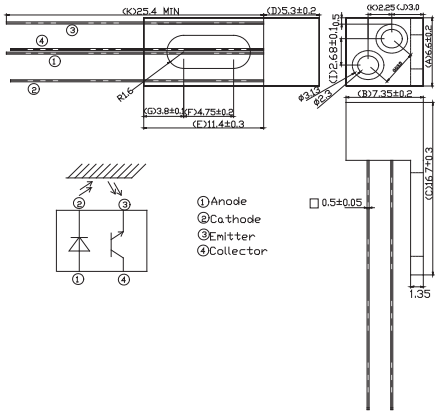

Product	Size (LxWxHmm)	V_F_Typ (V)	V_F_Max (V)	$V_{CE(SAT)}$_Max (V)	$I_{C(ON)}$_Min (mA)	I_{CEO} _Max. (nA)
ITR20501	7.35x6.6x5.3	1.2	1.5	0.4	0.02	100

Optical Sensor ❙ Transmissive Sensor

UNIT : mm

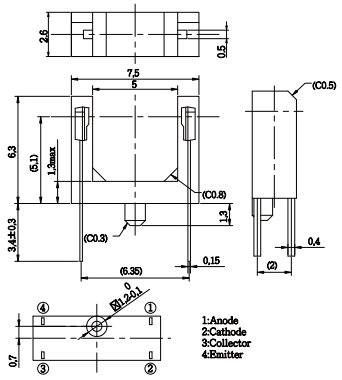

Product	Size (LxWxHmm)	V_F_Typ (V)	V_F_Max (V)	$V_{CE(SAT)}$_Max (V)	$I_{C(ON)}$_Min (mA)	I_{CEO} _Max. (nA)	Gap Distance (mm)
ITR1203DT50A/TB	7.5x2.6x6.3	1.18	1.4	0.4	0.25	100	5

UNIT : mm

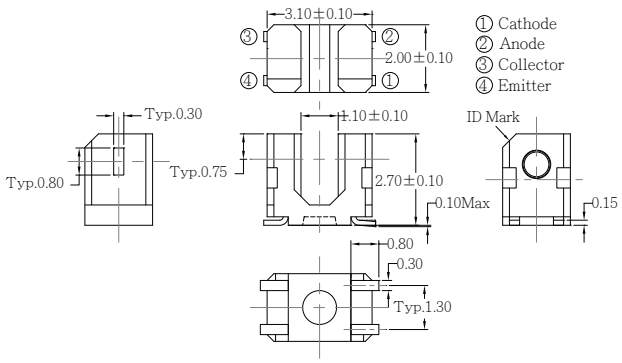

Product	Size (LxWxHmm)	V_F_Typ (V)	V_F_Max (V)	$V_{CE(SAT)}$_Max (V)	$I_{C(ON)}$_Min (mA)	I_{CEO} _Max. (nA)	Gap Distance (mm)
ITR1205ST11A/TR	3.1x2x2.7	1.2	1.4	0.4	0.15	100	1.1

Optical Sensors ❙ Transmissive Sensor

UNIT : mm

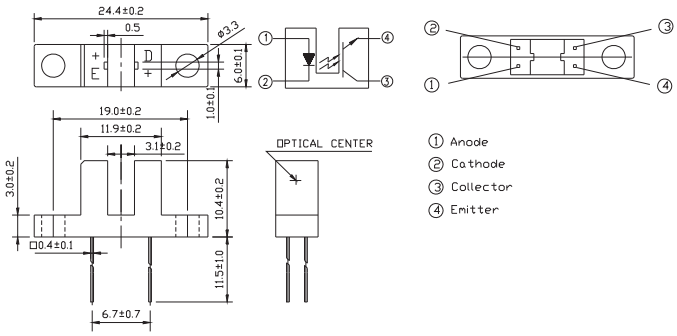

Product	Size (LxWxHmm)	V_F_Typ (V)	V_F_Max (V)	$V_{CE(SAT)}$_Max (V)	$I_{C(ON)}$_Min (mA)	I_{CEO} _Max. (nA)	Gap Distance (mm)
ITR8102	24.4x6x10.4	1.2	1.5	0.4	0.9	100	3.1

UNIT : mm

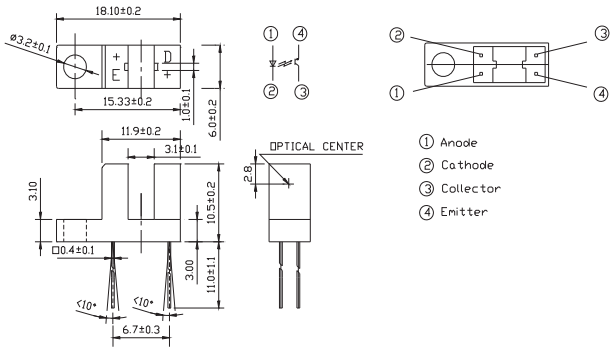

Product	Size (LxWxHmm)	V_F_Typ (V)	V_F_Max (V)	$V_{CE(SAT)}$_Max (V)	$I_{C(ON)}$_Min (mA)	I_{CEO} _Max. (nA)	Gap Distance (mm)
ITR8104	18.1x6x10.5	1.2	1.5	0.4	0.9	100	3.1

UNIT : mm

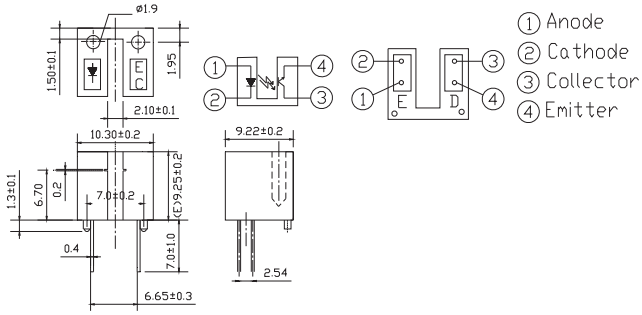

Product	Size (LxWxHmm)	V_F_Typ (V)	V_F_Max (V)	$V_{CE(SAT)}$_Max (V)	$I_{C(ON)}$_Min (mA)	I_{CEO} _Max. (nA)	Gap Distance (mm)
ITR8010	10.3x9.22x9.25	1.2	1.6	0.4	0.5	100	2.1

Optical Sensors ❙ Transmissive Sensor

UNIT : mm

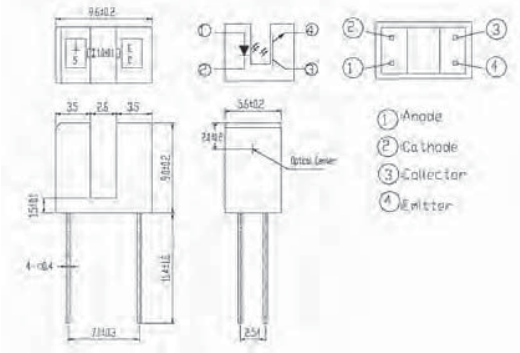

Product	Size (LxWxHmm)	V_F_Typ (V)	V_F_Max (V)	$V_{CE(SAT)}$_Max (V)	$I_{C(ON)}$_Min (mA)	I_{CEO} _Max. (nA)	Gap Distance (mm)
ITR8105	9.6x5.6x9	1.2	1.6	0.4	0.9	100	2.6

UNIT : mm

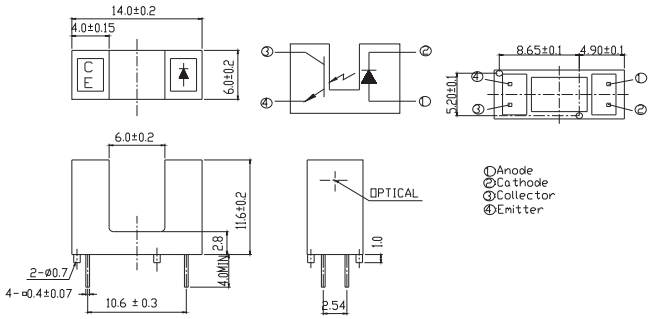

Product	Size (LxWxHmm)	V_F_Typ (V)	V_F_Max (V)	$V_{CE(SAT)}$_Max (V)	$I_{C(ON)}$_Min (mA)	I_{CEO} _Max. (nA)	Gap Distance (mm)
ITR8402-F-A	14.0x6x11.6	1.2	1.5	0.4	0.5	100	6

UNIT : mm

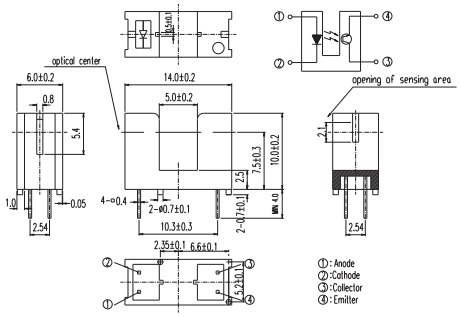

Product	Size (LxWxHmm)	V_F_Typ (V)	V_F_Max (V)	$V_{CE(SAT)}$_Max (V)	$I_{C(ON)}$_Min (mA)	I_{CEO} _Max. (nA)	Gap Distance (mm)
ITR9606-F	14x6x10	1.2	1.5	0.4	0.5	100	5

Optical Sensors ❙ Transmissive Sensor

UNIT : mm

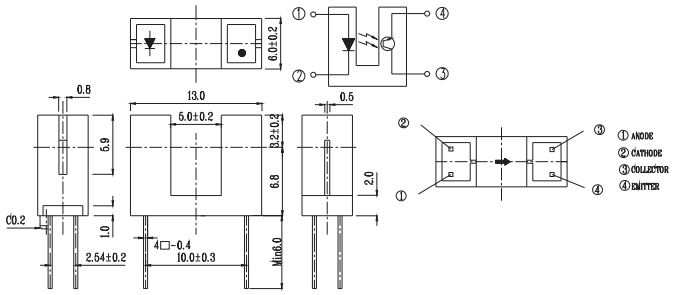

Product	Size (LxWxHmm)	V_F_Typ (V)	V_F_Max (V)	$V_{CE(SAT)}$_Max (V)	$I_{C(ON)}$_Min (mA)	I_{CEO} _Max. (nA)	Gap Distance (mm)
ITR9608-F	13x6x10	1.2	1.5	0.4	0.5	100	5

UNIT : mm

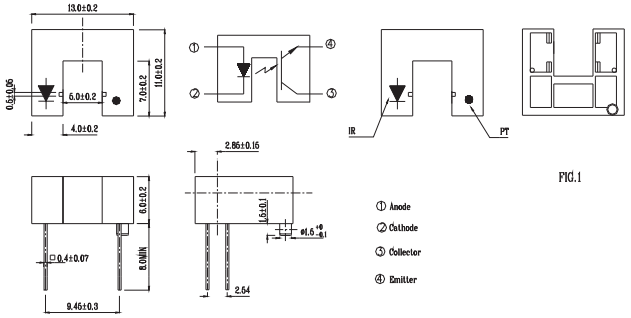

Product	Size (LxWxHmm)	V_F_Typ (V)	V_F_Max (V)	$V_{CE(SAT)}$_Max (V)	$I_{C(ON)}$_Min (mA)	I_{CEO} _Max. (nA)	Gap Distance (mm)
ITR9702-F	13x11x6	1.2	1.5	0.4	0.5	100	5

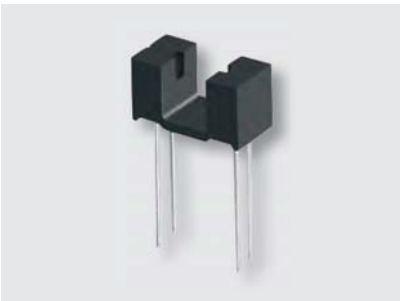

UNIT : mm

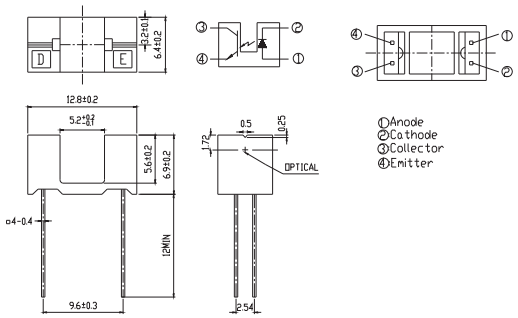

Product	Size (LxWxHmm)	V_F_Typ (V)	V_F_Max (V)	$V_{CE(SAT)}$_Max (V)	$I_{C(ON)}$_Min (mA)	I_{CEO} _Max. (nA)	Gap Distance (mm)
ITR9707	12.8x6.4x6.9	1.2	1.5	0.4	0.5	100	5.2

Optical Sensors ❙ Transmissive Sensor

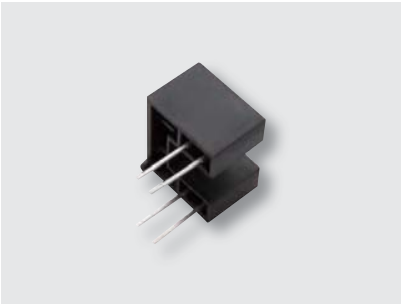

UNIT : mm

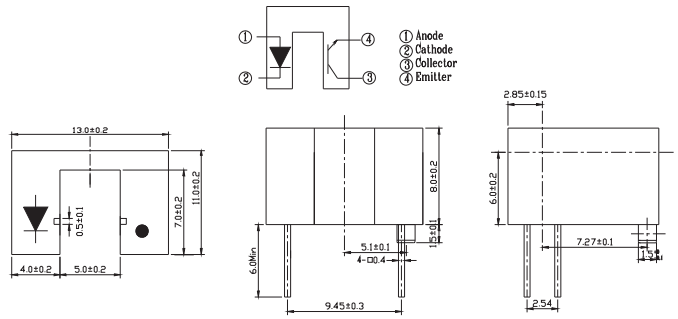

Product	Size (LxWxHmm)	V_F_Typ (V)	V_F_Max (V)	$V_{CE(SAT)}$_Max (V)	$I_{C(ON)}$_Min (mA)	I_{CEO} _Max. (nA)	Gap Distance (mm)
ITR9809-F/T	13x11x8	1.2	1.5	0.4	1	100	5

UNIT : mm

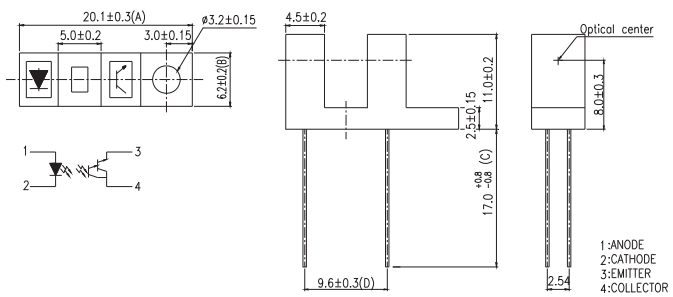

Product	Size (LxWxHmm)	V_F_Typ (V)	V_F_Max (V)	$V_{CE(SAT)}$_Max (V)	$I_{C(ON)}$_Min (mA)	I_{CEO} _Max. (nA)	Gap Distance (mm)
ITR9813	20.1x6.2x11	1.2	1.5	0.4	0.5	100	5

UNIT : mm

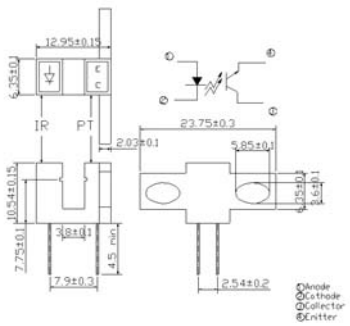

Product	Size (LxWxHmm)	V_F_Typ (V)	V_F_Max (V)	$V_{CE(SAT)}$_Max (V)	$I_{C(ON)}$_Min (mA)	I_{CEO} _Max. (nA)	Gap Distance (mm)
ITR20005-F	23.7x13x10.5	1.2	1.5	0.4	0.6	100	3.8

Optical Sensors ▌Transmissive Sensor

UNIT : mm

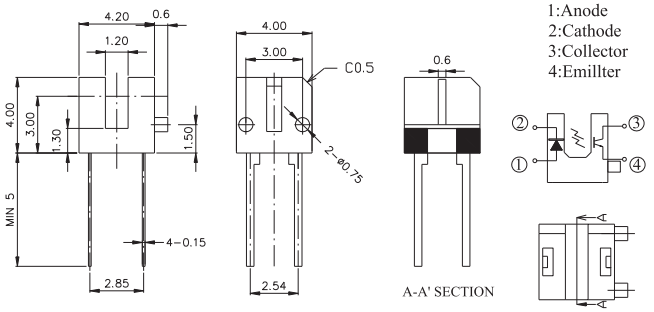

Product	Size (LxWxHmm)	V_F_Typ (V)	V_F_Max (V)	$V_{CE(SAT)}$_Max (V)	$I_{C(ON)}$_Min (mA)	I_{CEO} _Max. (nA)	Gap Distance (mm)
ITR20402	4.2x4x4	1.2	1.6	0.4	0.3	100	1.2

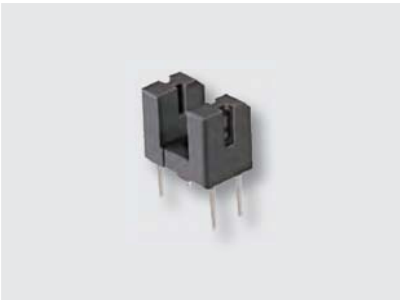

UNIT : mm

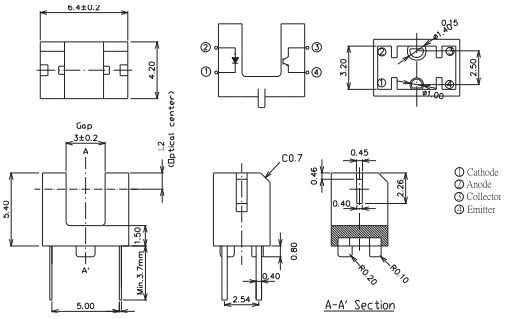

Product	Size (LxWxHmm)	V_F_Typ (V)	V_F_Max (V)	$V_{CE(SAT)}$_Max (V)	$I_{C(ON)}$_Min (mA)	I_{CEO} _Max. (nA)	Gap Distance (mm)
ITR20403	6.4x4.2x5.4	1.2	1.6	0.4	0.2	100	3

Photo Coupler ▌Darlington Transistor ▌4Pin DIP-DC

UNIT : mm

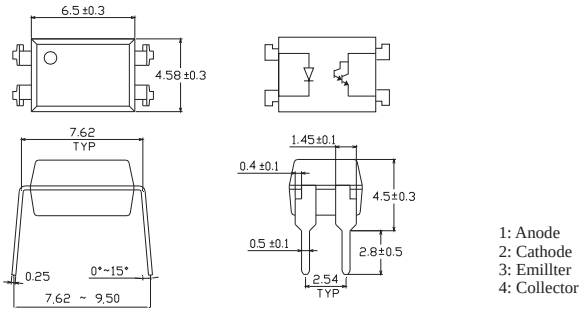

1: Anode
2: Cathode
3: Emillter
4: Collector

Product	Size (LxWxHmm)	V_F_Typ (V)	Rise / Fall Time (μs)	BV_{CEO}_Min (V)	CTR (%)	Viso (V_{rms})	$V_{CE(SAT)}$_Max (V)
EL815	6.5x4.58x3.5	1.2	60 / 53	35	600~7500	5000	1

UNIT : mm

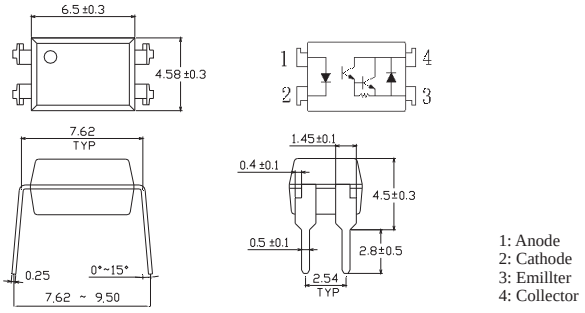

1: Anode
2: Cathode
3: Emillter
4: Collector

Product	Size (LxWxHmm)	V_F_Typ (V)	Rise / Fall Time (μs)	BV_{CEO}_Min (V)	CTR (%)	Viso (V_{rms})	$V_{CE(SAT)}$_Max (V)
EL852	6.5x4.58x3.5	1.2	300 / 100	350	1000~15000	5000	1.2

Photo Coupler ▌Darlington Transistor ▌4Pin SOP-DC

UNIT : mm

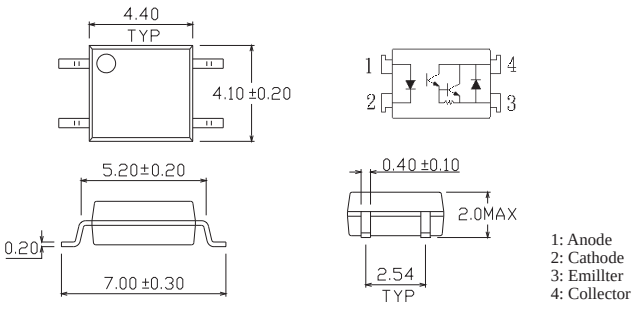

1: Anode
2: Cathode
3: Emillter
4: Collector

Product	Size (LxWxHmm)	V_F_Typ (V)	Rise / Fall Time (μs)	BV_{CEO}_Min (V)	CTR (%)	Viso (V_{rms})	$V_{CE(SAT)}$_Max (V)
EL452-G	4.4x4.1x2	1.2	80 / 10	350	1000 min.	3750	1.5

Photo Coupler ▌Darlington Transistor ▌6Pin DIP-DC

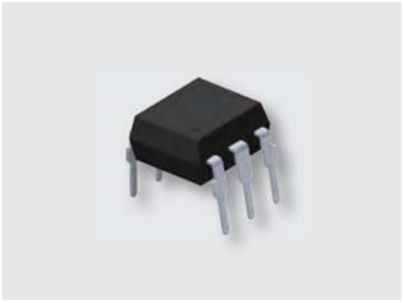

UNIT : mm

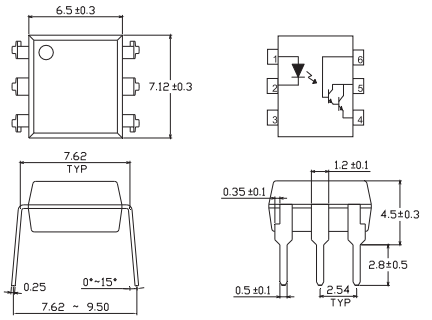

1. Anode
2. Cathode
3. No Connection
4. Emitter
5. Collector
6. Base

Product	Size (LxWxHmm)	V_F_Typ (V)	Rise / Fall Time (μs)	BV_{CEO} _ Min (V)	CTR (%)	Viso (V_{rms})	$V_{CE(SAT)}$_Max (V)
4N29	7.12x6.5x3.5	1.2	5 / 40	55	100 min.	5000	1
4N30	7.12x6.5x3.5	1.2	5 / 40	55	100 min.	5000	1
4N31	7.12x6.5x3.5	1.2	5 / 40	55	50 min.	5000	1.2
4N32	7.12x6.5x3.5	1.2	5 / 100	55	500 min.	5000	1
4N33	7.12x6.5x3.5	1.2	5 / 100	55	500 min.	5000	1
H11B1	7.12x6.5x3.5	1.2	25 / 18	55	500 min.	5000	1
H11B2	7.12x6.5x3.5	1.2	25 / 18	55	200 min.	5000	1
H11B3	7.12x6.5x3.5	1.2	25 / 18	55	100 min.	5000	1
H11B255	7.12x6.5x3.5	1.2	25 / 18	55	100 min.	5000	1
TIL113	7.12x6.5x3.5	1.2	5 / 100	55	300 min.	5000	1.2

Photo Coupler ▌Darlington Transistor ▌8Pin DIP-DC

UNIT : mm

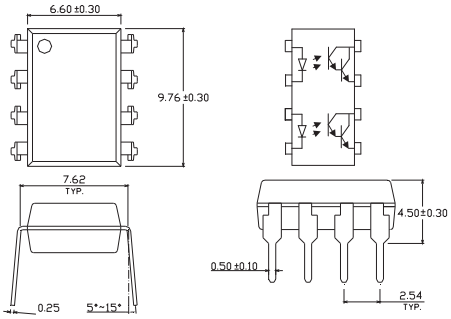

1, 3. Anode
2, 4. Cathode
5, 7. Emitter
6, 8. Collector

Product	Size (LxWxHmm)	V_F_Typ (V)	Rise / Fall Time (μs)	BV_{CEO} _Min (V)	CTR (%)	Viso (V_{rms})	$V_{CE(SAT)}$_Max (V)
EL825	9.76x6.6x3.5	1.2	60 / 53	40	600~7500	5000	1

Photo Coupler ▌High Speed ▌5Pin SOP-DC

UNIT : mm

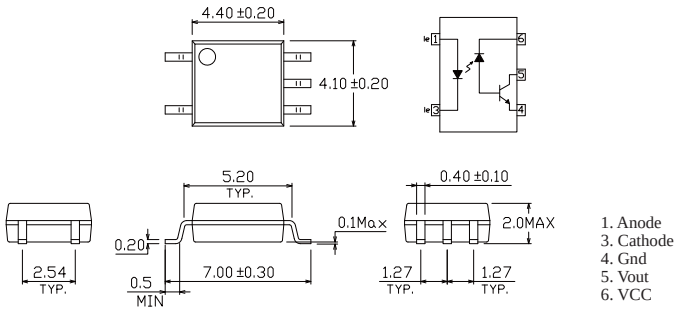

Product	Size (LxWxHmm)	tPHL / tPLH (ns)	Supply Voltage (V)	CTR (%)	Viso (V_{rms})	CMR (V/us)	I_O (mA)
ELM452	4.4×4.1×2	800 / 800	30 max.	20~50	3750	5000	8
ELM453	4.4×4.1×2	800 / 800	30 max.	20~50	3750	15000	8
ELM453L	4.4×4.1×2	800 / 800	30 max.	20~50	3750	15000	8

UNIT : mm

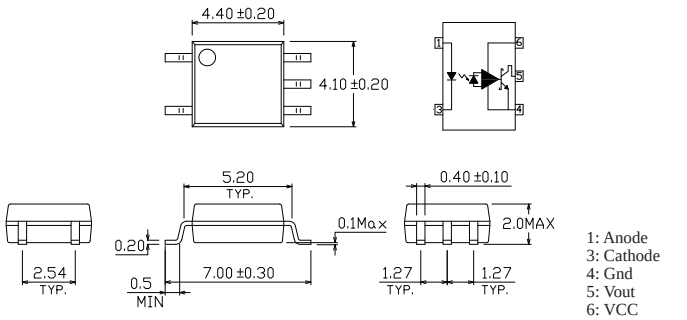

Product	Size (LxWxHmm)	tPHL / tPLH (ns)	Supply Voltage (V)	I_{FT} (mA)	Viso (V_{rms})	CMR (V/us)	I_O (mA)
ELM600	4.4×4.1×2	100 / 100	7 max.	5	3750	-	50 max.
ELM601	4.4×4.1×2	100 / 100	7 max.	5	3750	5000	50 max.
ELM611	4.4×4.1×2	100 / 100	7 max.	5	3750	20000	50 max.

Photo Coupler ▌High Speed ▌8Pin SOP-DC

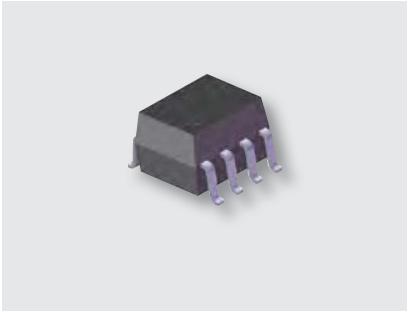

UNIT : mm

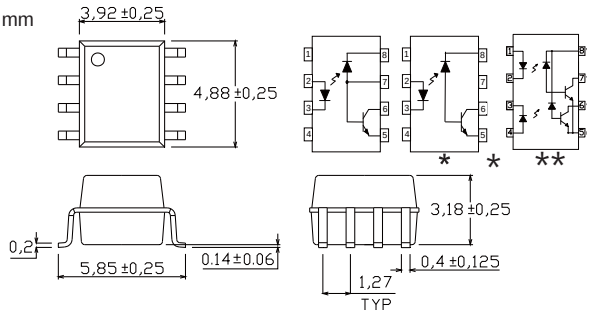

1. Anode
2. Cathode
3. Cathode
4. Anode
5. Gnd
6. Vout 2
7. Vout 1
8. VCC

Product	Size (LxWxHmm)	tPHL / tPLH (ns)	Supply Voltage (V)	CTR (%)	Viso (V_{rms})	CMR (V/us)	I_O (mA)
*EL0452	4.88x3.92x3.18	1000 / 1000	30 max.	19~50	3750	1000	8
*EL0453	4.88x3.92x3.18	1000 / 1000	30 max.	19~50	3750	15000	8
EL0500	4.88x3.92x3.18	2000 / 2000	30 max.	7~50	3750	1000	8
EL0501	4.88x3.92x3.18	1000 / 1000	30 max.	19~50	3750	1000	8
EL050L	4.88×3.92×3.18	800 / 800	30 max.	20~50	3750	15000	8
**EL0530	4.88x3.92x3.18	2000 / 2000	30 max.	7~50	3750	1000	8
**EL0531	4.88x3.92x3.18	1000 / 1000	30 max.	19~50	3750	1000	8

Star mark * : Please refer to the schematic of Pin configuration with " * " " ** "mark

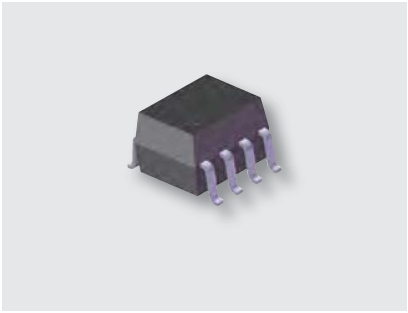

UNIT : mm

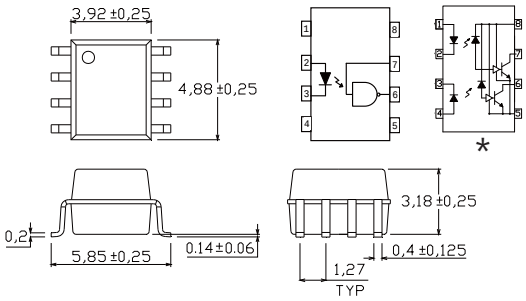

1. Anode
2. Cathode
3. Cathode
4. Anode
5. Gnd
6. Vout 2
7. Vout 1
8. VCC

Product	Size (LxWxHmm)	tPHL / tPLH (ns)	Supply Voltage (V)	I_{FT} (mA)	Viso (V_{rms})	CMR (V/us)	I_O (mA)
EL0600	4.88x3.92x3.18	75 / 75	7 max.	5	3750	--	50 max.
EL0601	4.88x3.92x3.18	75 / 75	7 max.	5	3750	5000	50 max.
EL0611	4.88x3.92x3.18	75 / 75	7 max.	5	3750	10000	50 max.
EL060L	4.88×3.92×3.18	75 / 75	7 max	5	3750	10000	50 max
*EL0630	4.88x3.92x3.18	100 / 100	7 max.	5	3750	5000	50 max.
*EL0631	4.88x3.92x3.18	100 / 100	7 max.	5	3750	10000	50 max.

Star mark * : Please refer to the schematic of Pin configuration with " * " mark

Photo Coupler ▌High Speed ▌8Pin DIP-DC

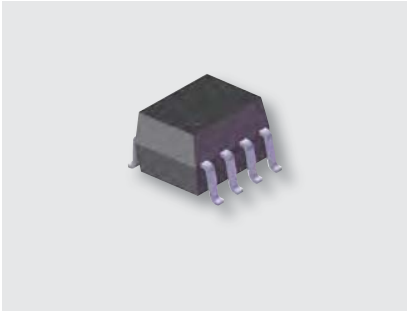

UNIT : mm

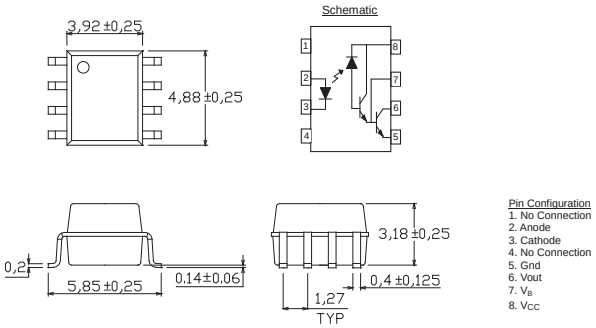

Product	Size (LxWxHmm)	tPHL / tPLH (ns)	Supply Voltage (V)	CTR (%)	Viso (V_{rms})	CMR (V/us)	I_O (mA)
EL0700	4.88x3.92x3.18	3000 / 8000	7	2000 typ.	3750	1000	60 max
EL0701	4.88x3.92x3.18	11000 / 20000	18	2500 typ.	3750	1000	60 max

UNIT : mm

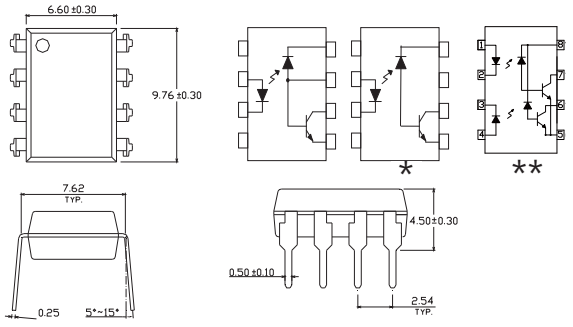

1. Anode
2. Cathode
3. Cathode
4. Anode
5. Gnd
6. Vout2
7. Vout1
8. VCC

Product	Size (LxWxHmm)	tPHL / tPLH (ns)	Supply Voltage (V)	CTR (%)	Viso (V_{rms})	CMR (V/us)	I_O (mA)
6N135	9.76x6.6x3.5	2000 / 2000	30 max.	7~50	5000	1000	8
6N136	9.76x6.6x3.5	1000 / 1000	30 max.	19~50	5000	1000	8
*EL4502	9.76x6.6x3.5	1000 / 1000	30 max.	19~50	5000	1000	8
*EL4503	9.76x6.6x3.5	1000 / 1000	30 max.	19~50	5000	15000	8
*EL4504	9.76x6.6x3.5	400 / 400	30 max.	25~60	5000	15000	8
**EL2530	9.76x6.6x3.5	2000 / 2000	30 max.	7~50	5000	1000	8
**EL2531	9.76x6.6x3.5	1000 / 1000	30 max.	19~50	5000	1000	8

Star mark * : Please refer to the schematic of Pin configuration with " * " " ** " mark

Photo Coupler ▌High Speed ▌8Pin DIP-DC

UNIT : mm

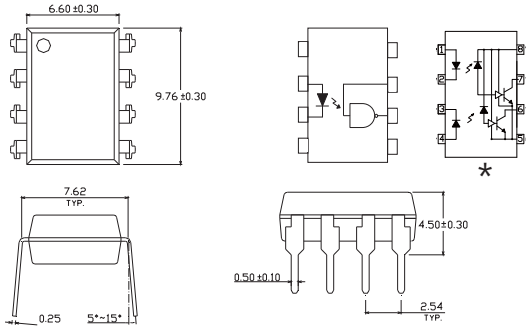

1, No Connection
2, Anode
3, Cathode
4. No Connection
5, Gnd
6, Vout
7, VE
8, VCC

Product	Size (LxWxHmm)	tPHL / tPLH (ns)	Supply Voltage (V)	I_{FT} (mA)	Viso (V_{rms})	CMR (V/us)	I_O (mA)
6N137	9.76x6.6x3.5	75 / 75	7 max.	5	5000	-	50 max.
EL2601	9.76x6.6x3.5	75 / 75	7 max.	5	5000	5000	50 max.
EL2611	9.76x6.6x3.5	75 / 75	7 max.	5	5000	10000	50 max.
EL260L	9.76×6.6×3.5	75 / 75	7 max	5	5000	10000	50 max
*EL2630	9.76x6.6x3.5	100 / 100	7 max.	5	5000	5000	50 max.
*EL2631	9.76x6.6x3.5	100 / 100	7 max.	5	5000	10000	50 max.

Star mark * : Please refer to the schematic of Pin configuration with " * " mark

UNIT : mm

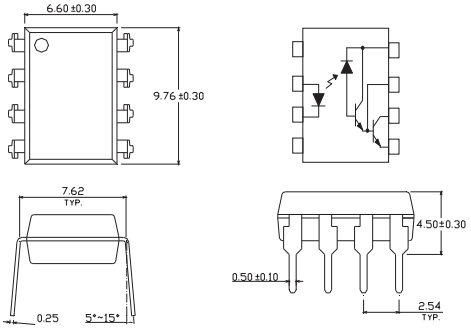

1. No Connection
2. Anode
3. Cathode
4. No Connection
5. Gnd
6. Vout
7. VB
8. VCC

Product	Size (LxWxHmm)	tPHL / tPLH (ns)	Supply Voltage (V)	CTR (%)	Viso (V_{rms})	CMR (V/us)	I_O (mA)
6N138	9.76x6.6x3.5	15000 / 50000	7 max.	300 min.	5000	1000	60 max.
6N139	9.76x6.6x3.5	30000 / 90000	18 max.	500 min.	5000	1000	60 max.

Photo Coupler ▌High Speed ▌8Pin Wide Body DIP-DC

UNIT : mm

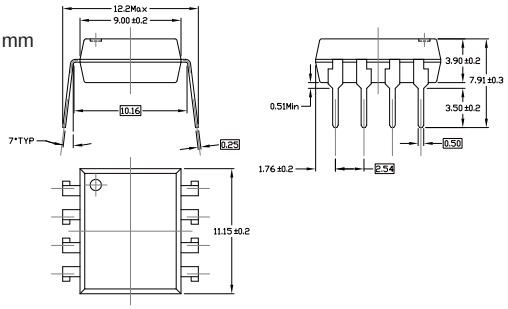

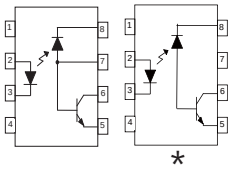

1. No Connection
2. Anode
3. Cathode
4. No Connection
5. Gnd
6. Vout
7. VB
8. VCC

Product	Size (LxWxHmm)	tPHL / tPLH (ns)	Supply Voltage (V)	CTR (%)	Viso (V_{rms})	CMR (V/us)	I_O (mA)
ELW135	11.15×9×3.9	2000 / 2000	30 max.	7~50	5000	1000	8 max.
ELW136	11.15×9×3.9	1000 / 1000	30 max.	19~50	5000	1000	8 max.
*ELW4503	11.15×9×3.9	1000 / 1000	30 max.	19~50	5000	15000	8 max.

Star mark * : Please refer to the schematic of Pin configuration with " * " mark

UNIT : mm

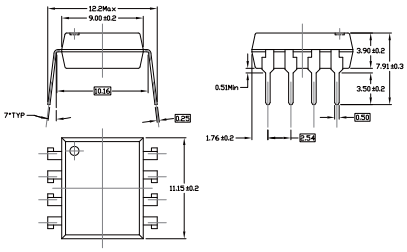

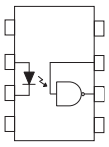

1. No Connection
2. Anode
3. Cathode
4. No Connection
5. Gnd
6. Vout
7. V_E
8. V_{CC}

Product	Size (LxWxHmm)	tPHL / tPLH (ns)	Supply Voltage (V)	I_{FT} (mA)	Viso (V_{rms})	CMR (V/us)	I_O (mA)
ELW137	11.15×9×3.9	100 / 100	7 max.	5	5000	-	50 max.
ELW2601	11.15×9×3.9	100 / 100	7 max.	5	5000	5000	50 max.
ELW2611	11.15×9×3.9	100 / 100	7 max.	5	5000	10000	50 max.

Photo Coupler ▌High Speed Low Input Current ▌8Pin SOP-DC

UNIT : mm

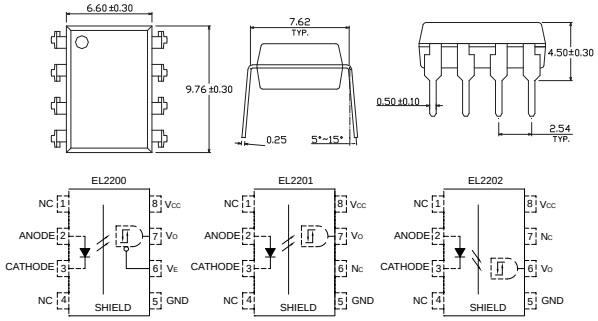

Product	Size (LxWxHmm)	tPHL / tPLH (ns)	Supply Voltage (V)	I_{FT} (mA)	Viso (V_{rms})	CMR (V/us)	I_O (mA)
EL2200	9.76×6.6×3.5	300 / 300	20 max	1.6	5000	1000	25 max
EL2201	9.76×6.6×3.5	300 / 300	20 max	1.6	5000	1000	25 max
EL2202	9.76×6.6×3.5	300 / 300	20 max	1.6	5000	1000	25 max

Photo Coupler ▌Schmitt Trigger ▌6Pin DIP-DC

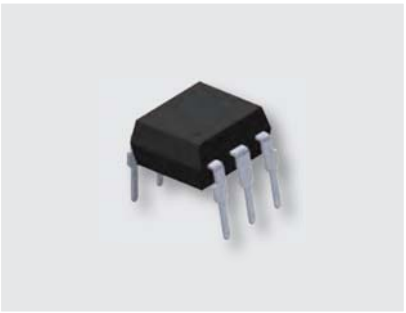

UNIT : mm

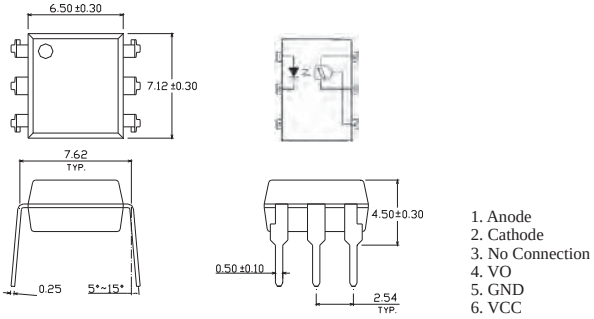

1. Anode
2. Cathode
3. No Connection
4. VO
5. GND
6. VCC

Product	Size (LxWxHmm)	Rise / Fall Time (μs)	Supply Voltage (V)	Viso (V_{rms})	I_{FT} (mA)	I_{CC}_Max (mA)	I_O (mA)
H11L1	7.12x6.5x3.5	0.1 / 0.1	3~15	5000	1.6	5	50 max.
H11L2	7.12x6.5x3.5	0.1 / 0.1	3~15	5000	10	5	50 max.
H11L3	7.12x6.5x3.5	0.1 / 0.1	3~15	5000	5	5	50 max.

Photo Coupler ▌Transistor ▌4Pin DIP-AC

UNIT : mm

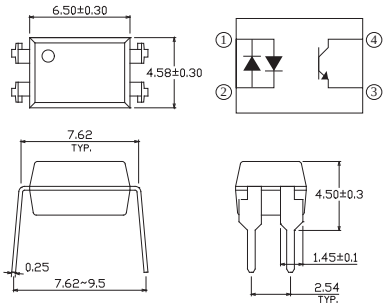

1. Anode / Cathode
2. Cathode / Anode
3. Emitter
4. Collector

Product	Size (LxWxHmm)	V_F_Typ (V)	Rise / Fall Time (μs)	BV_{CEO} _ Min (V)	CTR (%)	Viso (V_{rms})	$V_{CE(SAT)}$_Max (V)
EL814	6.5x4.58x3.5	1.2	7 / 11	80	20~300	5000	0.2

Photo Coupler ▌Transistor ▌4Pin DIP-DC

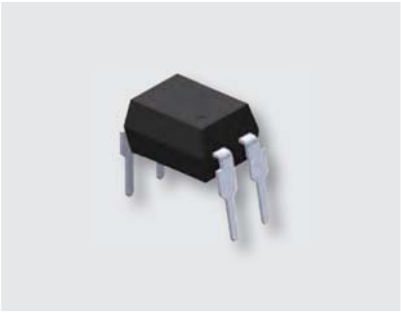

UNIT : mm

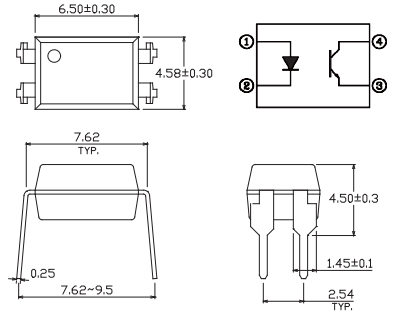

1. Anode
2. Cathode
3. Emitter
4. Collector

Product	Size (LxWxHmm)	V_F_Typ (V)	Rise / Fall Time (μs)	BV_{CEO} _ Min (V)	CTR (%)	Viso (V_{rms})	$V_{CE(SAT)}$_Max (V)
EL816	6.5x4.58x3.5	1.2	4 / 3	80	50~600	5000	0.2
EL817	6.5x4.58x3.5	1.2	4 / 3	35	50~600	5000	0.2
EL817-G	6.5x4.58x3.5	1.2	6 / 8	80	50~600	5000	0.2
EL851	6.5×4.58×3.5	1.2	4 / 5	350	50~600	5000	0.4

UNIT : mm

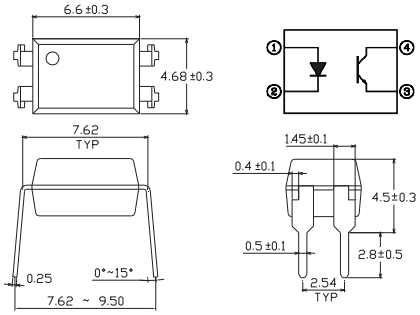

1. Anode
2. Cathode
3. Emitter
4. Collector

Product	Size (LxWxHmm)	V_F_Typ (V)	Rise / Fall Time (μs)	BV_{CEO} _ Min (V)	CTR (%)	Viso (V_{rms})	$V_{CE(SAT)}$_Max (V)
EL617	6.6×4.68×3.5	1.2	4 / 3	80	50~600	5000	0.2

Photo Coupler ▌Transistor ▌4Pin SOP-AC

UNIT : mm

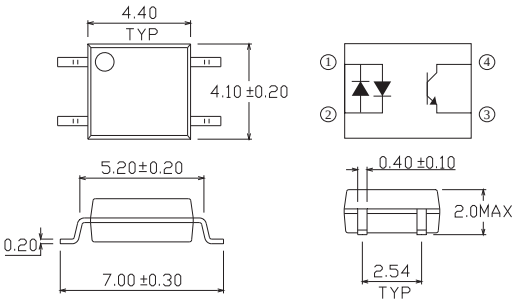

1. Anode / Cathode
2. Cathode / Anode
3. Emitter
4. Collector

Product	Size (LxWxHmm)	V_F_Typ (V)	Rise / Fall Time (μs)	BV_{CEO} _ Min (V)	CTR (%)	Viso (V_{rms})	$V_{CE(SAT)}$_Max (V)
EL354N-G	4.4x4.1x2	1.2	6 / 8	80	20~300	3750	0.2

Photo Coupler ▌Transistor ▌4Pin SOP-DC

UNIT : mm

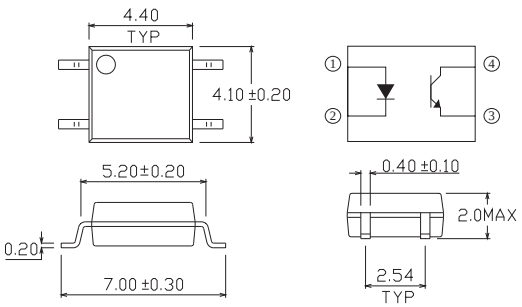

1. Anode
2. Cathode
3. Emitter
4. Collector

Product	Size (LxWxHmm)	V_F_Typ (V)	Rise / Fall Time (μs)	BV_{CEO} _ Min (V)	CTR (%)	Viso (V_{rms})	$V_{CE(SAT)}$_Max (V)
EL357N-G	4.4x4.1x2	1.2	3 / 4	80	50~600	3750	0.2

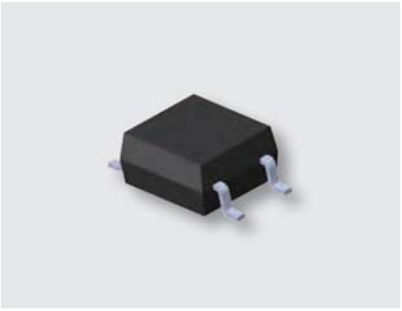

UNIT : mm

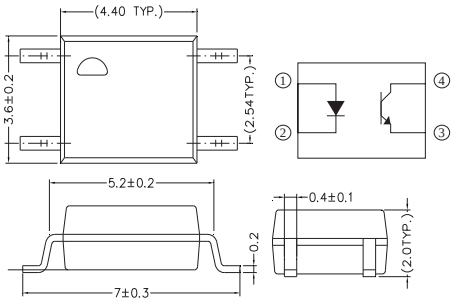

1. Anode
2. Cathode
3. Emitter
4. Collector

Product	Size (LxWxHmm)	V_F_Typ (V)	Rise / Fall Time (μs)	BV_{CEO} _ Min (V)	CTR (%)	Viso (V_{rms})	$V_{CE(SAT)}$_Max (V)
EL121N	4.4×3.6×2	1.2	3 / 4	80	50~600	3750	0.2

Photo Coupler ▌Transistor ▌4Pin SSOP-AC

UNIT : mm

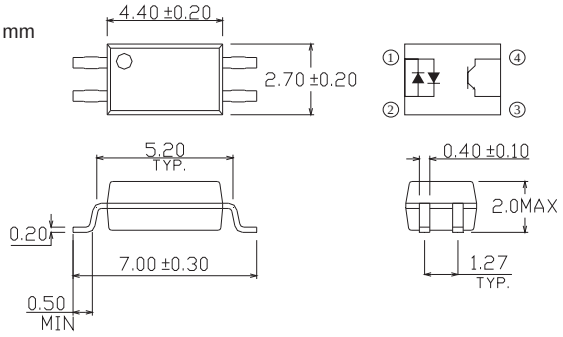

1. Anode/Cathode
2. Cathode/Anode
3. Emitter
4. Collector

Product	Size (LxWxHmm)	V_F_Typ (V)	Rise / Fall Time (μs)	BV_{CEO}_Min (V)	CTR (%)	Viso (V_{rms})	$V_{CE(SAT)}$_Max (V)
EL3H4-G	4.4x2.7x2	1.2	6 / 8	80	20~300	3750	0.2

Photo Coupler ▌Transistor ▌4Pin SSOP-DC

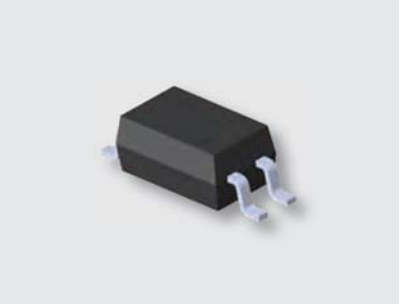

UNIT : mm

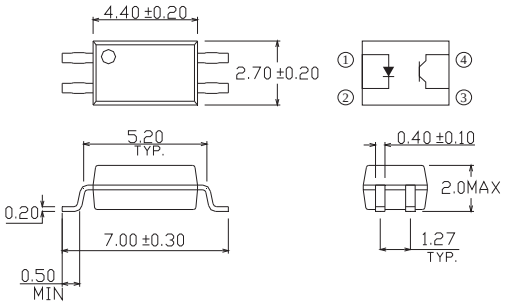

1. Anode
2. Cathode
3. Emitter
4. Collector

Product	Size (LxWxHmm)	V_F_Typ (V)	Rise / Fall Time (μs)	BV_{CEO} _ Min (V)	CTR (%)	Viso (V_{rms})	$V_{CE(SAT)}$_Max (V)
EL3H7-G	4.4x2.7x2	1.2	5 / 3	80	50~600	3750	0.2

Photo Coupler ▌Transistor ▌4Pin LSOP-DC

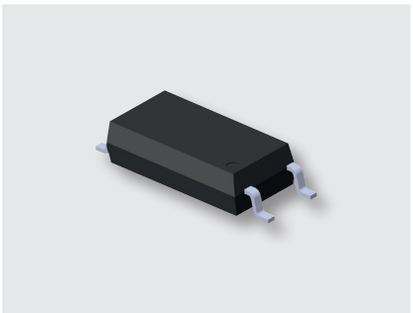

UNIT : mm

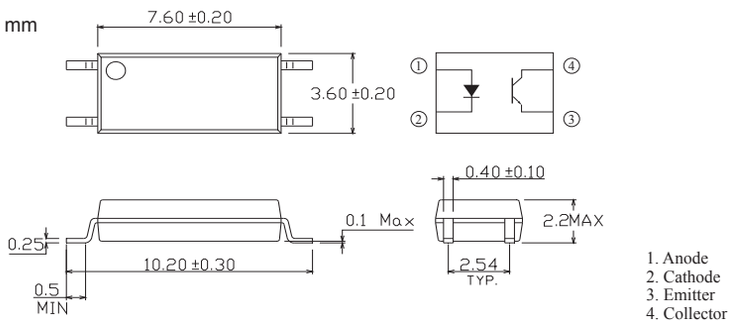

1. Anode
2. Cathode
3. Emitter
4. Collector

Product	Size (LxWxHmm)	V_F_Typ (V)	Rise / Fall Time (μs)	BV_{CEO} _ Min (V)	CTR (%)	Viso (V_{rms})	$V_{CE(SAT)}$_Max (V)
EL1010-G	7.6x3.6x2.2	1.45	2 / 3	80	50~600	5000	0.3
EL1012-G	7.6x3.6x2.2	1.45	2 / 3	80	63~125	5000	0.3
EL1013-G	7.6x3.6x2.2	1.45	2 / 3	80	100~200	5000	0.3
EL1014-G	7.6x3.6x2.2	1.45	2 / 3	80	160~320	5000	0.3
EL1017-G	7.6x3.6x2.2	1.45	2 / 3	80	80~160	5000	0.3
EL1018-G	7.6x3.6x2.2	1.45	2 / 3	80	130~260	5000	0.3
EL1019-G	7.6x3.6x2.2	1.45	2 / 3	80	200~400	5000	0.3

Photo Coupler ▌Transistor ▌5Pin LSOP-DC

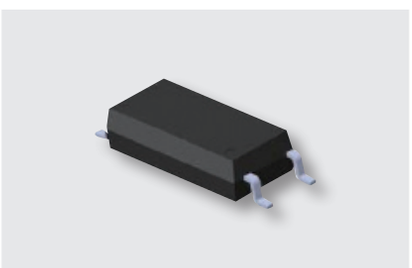

UNIT : mm

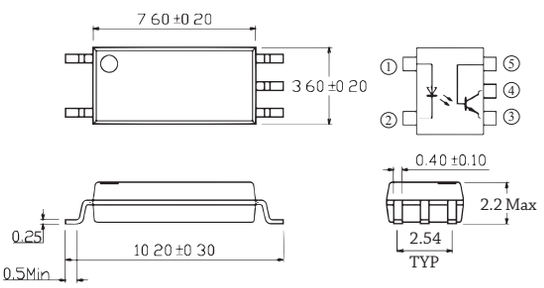

1. Anode
2. Cathode
3. Emitter
4. Collector
5. Base

Product	Size (LxWxHmm)	V_F_Typ (V)	Rise / Fall Time (μs)	BV_{CEO} _ Min (V)	CTR (%)	Viso (V_{rms})	$V_{CE(SAT)}$_Max (V)
EL1110-G	7.6x3.6x2.2	1.45	2 / 3	80	50~600	5000	0.4
EL1112-G	7.6x3.6x2.2	1.45	2 / 3	80	63~125	5000	0.4
EL1113-G	7.6x3.6x2.2	1.45	2 / 3	80	100~200	5000	0.4
EL1114-G	7.6x3.6x2.2	1.45	2 / 3	80	160~320	5000	0.4
EL1116-G	7.6x3.6x2.2	1.45	2 / 3	80	100~300	5000	0.4
EL1117-G	7.6x3.6x2.2	1.45	2 / 3	80	80~160	5000	0.4
EL1118-G	7.6x3.6x2.2	1.45	2 / 3	80	130~260	5000	0.4
EL1119-G	7.6x3.6x2.2	1.45	2 / 3	80	200~400	5000	0.4

Photo Coupler ▌Transistor ▌6Pin DIP-DC

UNIT : mm

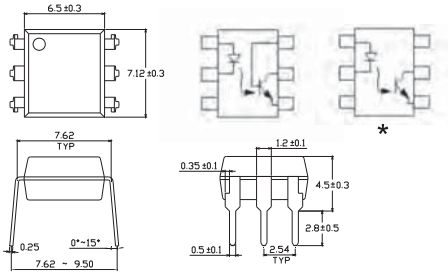

1. Anode
2. Cathode
3. No Connection
4. Emitter
5. Collector
6. Base

Product	Size (LxWxHmm)	V_F_Typ (V)	Rise / Fall Time (μs)	BV_{CEO} _ Min (V)	CTR (%)	Viso (V_{rms})	$V_{CE(SAT)}$_Max (V)
4N25	7.12x6.5x3.5	1.2	3 / 3	80	20 min.	5000	0.5
4N26	7.12x6.5x3.5	1.2	3 / 3	80	20 min.	5000	0.5
4N27	7.12x6.5x3.5	1.2	3 / 3	80	10 min.	5000	0.5
4N28	7.12x6.5x3.5	1.2	3 / 3	80	10 min.	5000	0.5
4N35	7.12x6.5x3.5	1.2	10 / 9	80	100 min.	5000	0.3
4N36	7.12x6.5x3.5	1.2	10 / 9	80	100 min.	5000	0.3
4N37	7.12x6.5x3.5	1.2	10 / 9	80	100 min.	5000	0.3
4N38	7.12x6.5x3.5	1.2	10 / 9	80	20 min.	5000	1
CNY17-1	7.12x6.5x3.5	--	6 / 8	80	40~80	5000	0.3
CNY17-2	7.12x6.5x3.5	--	6 / 8	80	63~125	5000	0.3
CNY17-3	7.12x6.5x3.5	--	6 / 8	80	100~200	5000	0.3
CNY17-4	7.12x6.5x3.5	--	6 / 8	80	160~320	5000	0.3
*CNY17F-1	7.12x6.5x3.5	--	6 / 8	80	40~80	5000	0.3
*CNY17F-2	7.12x6.5x3.5	--	6 / 8	80	63~125	5000	0.3
*CNY17F-3	7.12x6.5x3.5	--	6 / 8	80	100~200	5000	0.3
*CNY17F-4	7.12x6.5x3.5	--	6 / 8	80	160~320	5000	0.3
H11A1	7.12x6.5x3.5	1.2	3 / 3	80	50 min.	5000	0.4
H11A2	7.12x6.5x3.5	1.2	3 / 3	80	20 min.	5000	0.4
H11A3	7.12x6.5x3.5	1.2	3 / 3	80	20 min.	5000	0.4
H11A4	7.12x6.5x3.5	1.2	3 / 3	80	10 min.	5000	0.4
H11A5	7.12x6.5x3.5	1.2	3 / 3	80	30 min.	5000	0.4
MCT2E	7.12x6.5x3.5	1.23	3 / 3	80	20 min.	5000	0.4
TIL111	7.12x6.5x3.5	1.22	6 / 8	80	--	5000	0.4
TIL117	7.12x6.5x3.5	--	6 / 8	80	50 min.	5000	0.4

Star mark * : Please refer to the schematic of Pin configuration with " * " mark

Photo Coupler ▌Transistor ▌6Pin DIP-AC

UNIT : mm

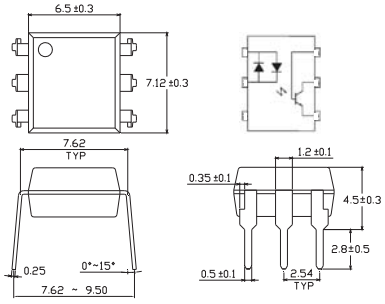

1. Anode/Cathode
2. Cathode/Anode
3. No Connection
4. Emitter
5. Collector
6. Base

Product	Size (LxWxHmm)	V_F_Typ (V)	Rise / Fall Time (μs)	BV_{CEO} _ Min (V)	CTR (%)	Viso (V_{rms})	$V_{CE(SAT)}$_Max (V)
H11AA1	7.12x6.5x3.5	1.2	10 / 10	80	20 min.	5000	0.4
H11AA2	7.12x6.5x3.5	1.2	10 / 10	80	10 min.	5000	0.4
H11AA3	7.12x6.5x3.5	1.2	10 / 10	80	50 min.	5000	0.4
H11AA4	7.12x6.5x3.5	1.2	10 / 10	80	100 min.	5000	0.4

Photo Coupler ▌Transistor ▌8Pin DIP-DC

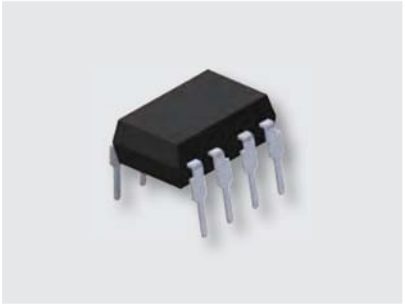

UNIT : mm

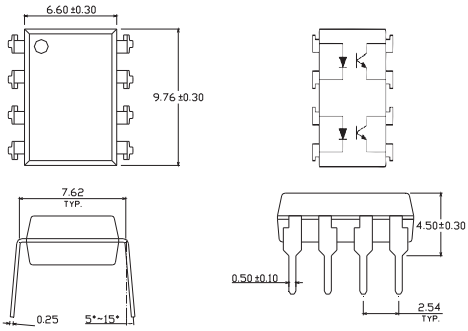

1, 3. Anode
2, 4. Cathode
5, 7. Emitter
6, 8. Collector

Product	Size (LxWxHmm)	V_F_Typ (V)	Rise / Fall Time (μs)	BV_{CEO} _ Min (V)	CTR (%)	Viso (V_{rms})	$V_{CE(SAT)}$_Max (V)
EL827	9.76x6.5x3.5	1.2	3 / 4	80	50~600	5000	0.2

Photo Coupler ▌Transistor ▌8Pin SOP-DC

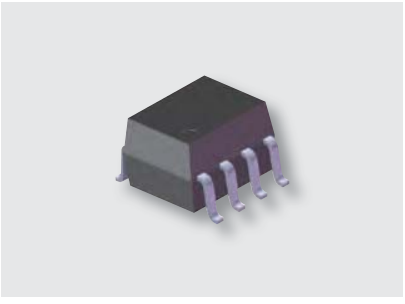

UNIT : mm

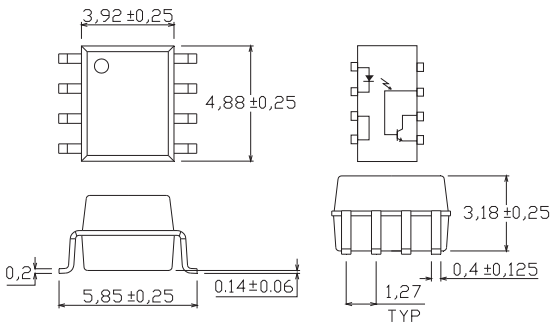

1. Anode
2. Cathode
3. No Connection
4. No Connection
5. Emitter
6. Collector
7. Base
8. No Connection

Product	Size (LxWxHmm)	V_F_Typ (V)	Rise / Fall Time (μs)	BV_{CEO} _ Min (V)	CTR (%)	Viso (V_{rms})	$V_{CE(SAT)}$_Max (V)
EL205	4.88x3.92x3.18	1.3	1.6 / 2.2	80	40~80	3750	0.4
EL206	4.88x3.92x3.18	1.3	1.6 / 2.2	80	63~125	3750	0.4
EL207	4.88x3.92x3.18	1.3	1.6 / 2.2	80	100~200	3750	0.4
EL208	4.88x3.92x3.18	1.3	1.6 / 2.2	80	160~320	3750	0.4
EL211	4.88x3.92x3.18	1.3	1.6 / 2.2	80	20 min.	3750	0.4
EL212	4.88x3.92x3.18	1.3	1.6 / 2.2	80	50 min.	3750	0.4
EL213	4.88x3.92x3.18	1.3	1.6 / 2.2	80	100 min.	3750	0.4
EL215	4.88x3.92x3.18	1.3	1.6 / 2.2	80	10 min.	3750	0.4
EL216	4.88x3.92x3.18	1.3	1.6 / 2.2	80	50 min.	3750	0.4
EL217	4.88x3.92x3.18	1.3	1.6 / 2.2	80	100 min.	3750	0.4

Photo Coupler ▌Transistor ▌8Pin SOP-DC

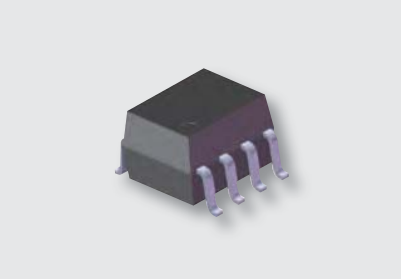

UNIT : mm

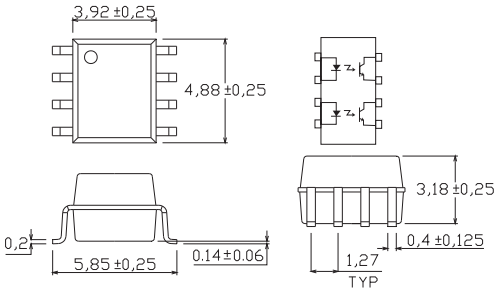

1. Anode
2. Cathode
3. No Connection
4. No Connection
5. Emitter
6. Collector
7. Base
8. No Connection

Product	Size (LxWxHmm)	V_F_Typ (V)	Rise / Fall Time (μs)	BV_{CEO}_Min (V)	CTR (%)	Viso (V_{rms})	$V_{CE(SAT)}$_Max (V)
ELD205	4.88x3.92x3.18	1.2	1.6 / 2.2	80	40~80	3750	0.4
ELD206	4.88x3.92x3.18	1.2	1.6 / 2.2	80	63~125	3750	0.4
ELD207	4.88x3.92x3.18	1.2	1.6 / 2.2	80	100~200	3750	0.4
ELD211	4.88x3.92x3.18	1.2	1.6 / 2.2	80	20 min.	3750	0.4
ELD213	4.88x3.92x3.18	1.2	1.6 / 2.2	80	100 min.	3750	0.4
ELD217	4.88x3.92x3.18	1.2	1.6 / 2.2	80	100 min.	3750	0.4

Photo Coupler ▌Transistor ▌8Pin SSOP-DC

UNIT : mm

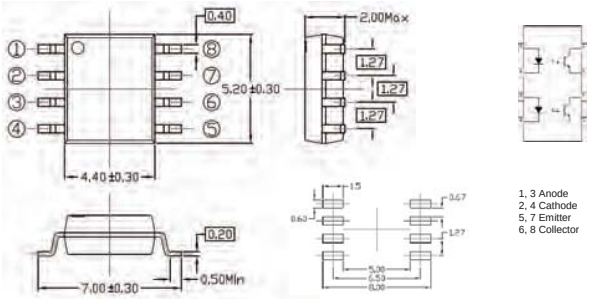

1, 3 Anode
2, 4 Cathode
5, 7 Emitter
6, 8 Collector

Product	Size (LxWxHmm)	V_F_Typ (V)	Rise / Fall Time (μs)	BV_{CEO}_Min (V)	CTR (%)	Viso (V_{rms})	$V_{CE(SAT)}$_Max (V)
ELD3H7	5.2×4.4×2	1.2	5 / 3	80	50~600	3750	0.2

Photo Coupler ▌Transistor ▌16Pin DIP-DC

UNIT : mm

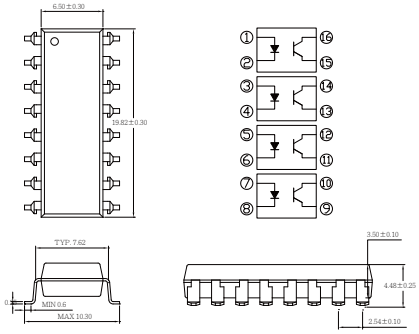

1, 3, 5, 7 Anode
2, 4, 6, 8 Cathode
9,11,13,15 Emitter
10,12,14,16 Collector

Product	Size (LxWxHmm)	V_F_Typ (V)	Rise / Fall Time (μs)	BV_{CEO}_Min (V)	CTR (%)	Viso (V_{rms})	$V_{CE(SAT)}$_Max (V)
EL847	19.82×6.5×3.5	1.2	4 / 3	80	50~600	5000	0.2

Photo Coupler ▌Transistor ▌16Pin SSOP-AC

UNIT : mm

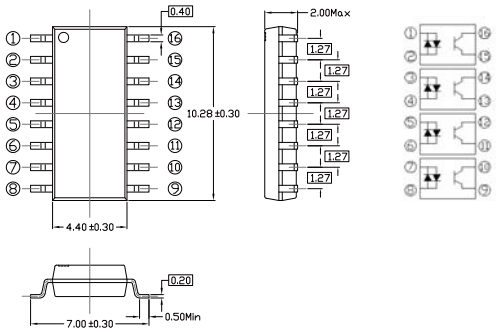

1, 3, 5, 7 Anode/Cathode
2, 4, 6, 8 Cathode/Anode
9,11,13,15 Emitter
10,12,14,16 Collector

Product	Size (LxWxHmm)	V_F_Typ (V)	Rise / Fall Time (μs)	BV_{CEO}_Min (V)	CTR (%)	Viso (V_{rms})	$V_{CE(SAT)}$_Max (V)
ELQ3H4	10.28×4.4×2	1.2	5 / 3	80	20~300	3750	0.2

Photo Coupler ▌Transistor ▌16Pin SSOP-DC

UNIT : mm

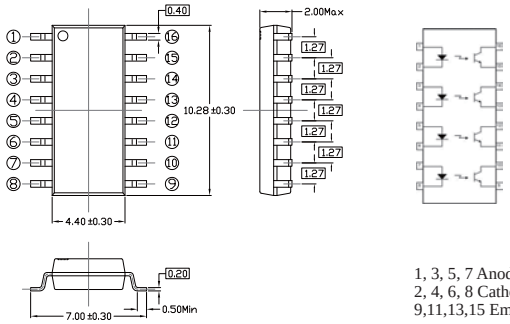

1, 3, 5, 7 Anode
2, 4, 6, 8 Cathode
9,11,13,15 Emitter

Product	Size (LxWxHmm)	V_F_Typ (V)	Rise / Fall Time (μs)	BV_{CEO}_Min (V)	CTR (%)	Viso (V_{rms})	$V_{CE(SAT)}$_Max (V)
ELQ3H7	10.28×4.4×2	1.2	5 / 3	80	50~600	3750	0.2

Photo Coupler ▌Transistor Low Input Current ▌4pin DIP-DC

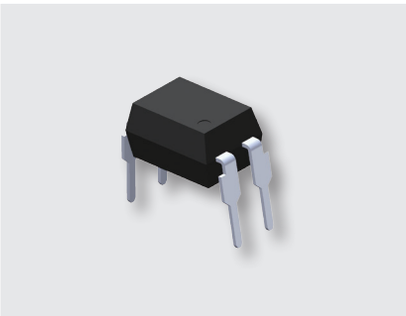

UNIT : mm

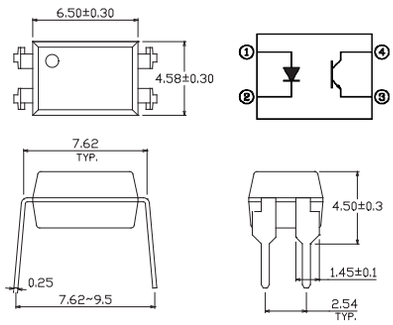

1. Anode
2. Cathode
3. Emitter
4. Collector

Product	Size (LxWxHmm)	V_F_Typ (V)	Rise / Fall Time (μs)	BV_{CEO} _ Min (V)	CTR (%)	Viso (V_{rms})	$V_{CE(SAT)}$_Max (V)
EL8171	6.5×4.58×3.5	1.2	6 / 8	70	100~350	5000	0.2

Photo Coupler ▌Transistor Low Input Current ▌4pin LSOP-DC

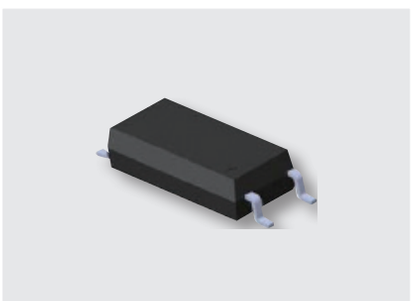

UNIT : mm

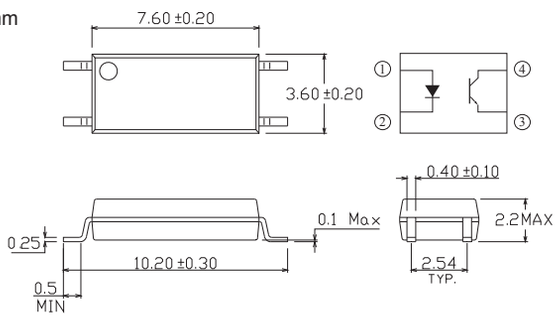

1. Anode
2. Cathode
3. Emitter
4. Collector

Product	Size (LxWxHmm)	V_F_Typ (V)	Rise / Fall Time (μs)	BV_{CEO} _ Min (V)	CTR (%)	Viso (V_{rms})	$V_{CE(SAT)}$_Max (V)
EL357L	7.6×3.6×2.2	1.45	7 / 8	80	63~300	5000	0.4
EL357L(A)	7.6×3.6×2.2	1.45	7 / 8	80	63~125	5000	0.4
EL357L(B)	7.6×3.6×2.2	1.45	7 / 8	80	100~200	5000	0.4

Photo Coupler ▌Transistor High Isolation ▌4pin DIP-DC

UNIT : mm

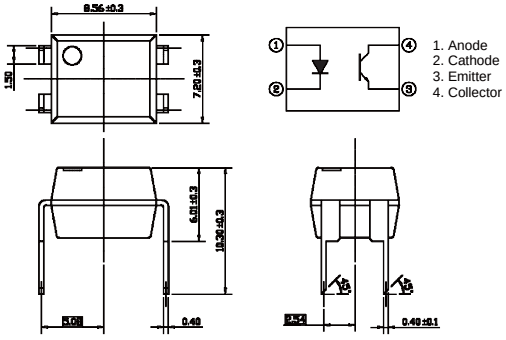

Product	Size (LxWxHmm)	V_F_Typ (V)	Rise / Fall Time (μs)	BV_{CEO} _ Min (V)	CTR (%)	Viso (V_{rms})	$V_{CE(SAT)}$_Max (V)
CNY64	8.56x7.2x6.01	1.6	3 / 5	80	50~300	8200	0.3

UNIT : mm

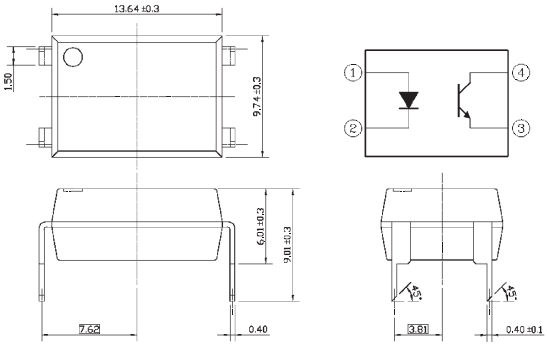

Product	Size (LxWxHmm)	V_F_Typ (V)	Rise / Fall Time (μs)	BV_{CEO} _ Min (V)	CTR (%)	Viso (V_{rms})	$V_{CE(SAT)}$_Max (V)
CNY65	13.64x9.74x6.01	1.6	3 / 5	80	50~300	8200	0.3

Photo Coupler ▌Triac ▌4Pin SOP-DC

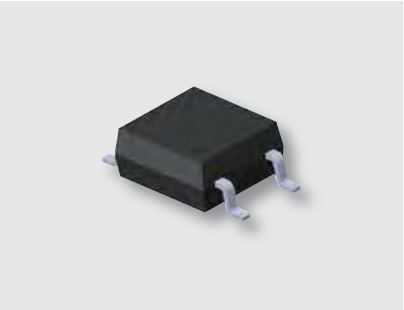

UNIT : mm

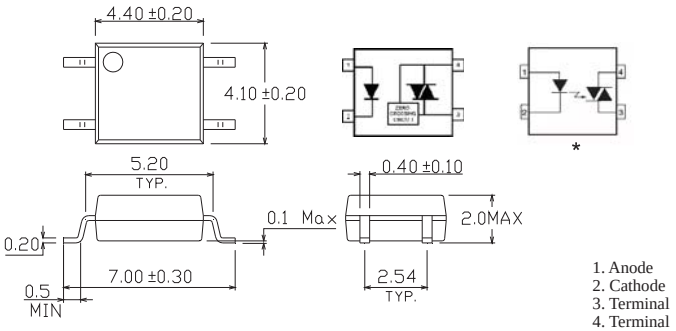

1. Anode
2. Cathode
3. Terminal
4. Terminal

Product	Size (LxWxHmm)	V_{TM} (V)	V_{INH} (V)	V_{DRM} (V)	V_F_Max (V)	Viso (V_{rms})	I_{FT} (mA)
ELM3042	4.4x4.1x2	3	20	400	1.5	3750	10
ELM3043	4.4x4.1x2	3	20	400	1.5	3750	5
ELM3044	4.4x4.1x2	3	20	400	1.5	3750	3
ELM3062	4.4x4.1x2	3	20	600	1.5	3750	10
ELM3063	4.4x4.1x2	3	20	600	1.5	3750	5
ELM3064	4.4x4.1x2	3	20	600	1.5	3750	3
ELM3082	4.4x4.1x2	3	20	800	1.5	3750	10
ELM3083	4.4x4.1x2	3	20	800	1.5	3750	5
ELM3084	4.4x4.1x2	3	20	800	1.5	3750	3
*ELM3022	4.4x4.1x2	2.5	--	400	1.2	3750	10
*ELM3023	4.4x4.1x2	2.5	--	400	1.2	3750	5
*ELM3024	4.4x4.1x2	2.5	--	400	1.2	3750	3
*ELM3052	4.4x4.1x2	2.5	--	600	1.2	3750	10
*ELM3053	4.4x4.1x2	2.5	--	600	1.2	3750	5
*ELM3054	4.4x4.1x2	2.5	--	600	1.2	3750	3

Star mark * : Please refer to the schematic of Pin configuration with " * " mark

Photo Coupler ▌Triac ▌4Pin DIP-DC

UNIT : mm

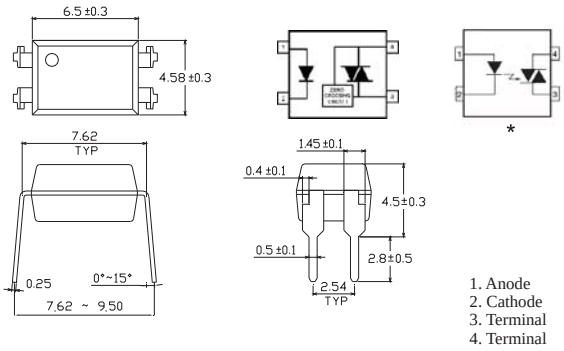

1. Anode
2. Cathode
3. Terminal
4. Terminal

Product	Size (LxWxHmm)	V_{TM} (V)	V_{INH} (V)	V_{DRM} (V)	V_F_Max (V)	Viso (V_{rms})	I_{FT} (mA)
ELT3041	6.5×4.58×3.5	3	20	400	1.5	5000	15
ELT3042	6.5×4.58×3.5	3	20	400	1.5	5000	10
ELT3043	6.5×4.58×3.5	3	20	400	1.5	5000	5
ELT3061	6.5×4.58×3.5	3	20	600	1.5	5000	15
ELT3062	6.5×4.58×3.5	3	20	600	1.5	5000	10
ELT3063	6.5×4.58×3.5	3	20	600	1.5	5000	5
ELT3081	6.5×4.58×3.5	3	20	800	1.5	5000	15
ELT3082	6.5×4.58×3.5	3	20	800	1.5	5000	10
ELT3083	6.5×4.58×3.5	3	20	800	1.5	5000	5
*ELT3021	6.5×4.58×3.5	2.5	-	400	1.2	5000	15
*ELT3022	6.5×4.58×3.5	2.5	-	400	1.2	5000	10
*ELT3023	6.5×4.58×3.5	2.5	-	400	1.2	5000	5
*ELT3051	6.5×4.58×3.5	2.5	-	600	1.2	5000	15
*ELT3052	6.5×4.58×3.5	2.5	-	600	1.2	5000	10
*ELT3053	6.5×4.58×3.5	2.5	-	600	1.2	5000	5

Star mark * : Please refer to the schematic of Pin configuration with " * " mark

Photo Coupler ▌Triac ▌5Pin DIP-DC

UNIT : mm

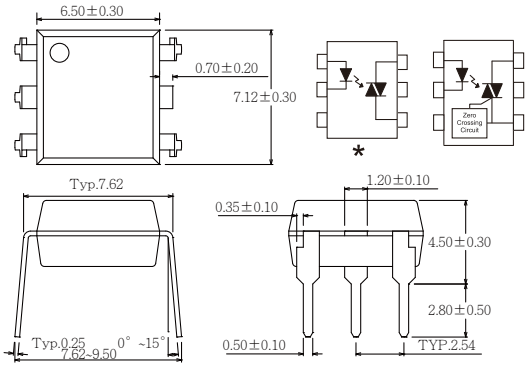

1. Anode
2. Cathode
3. No Connection
4. Terminal
5. Pin Cut
6. Terminal

Product	Size (LxWxHmm)	V_{TM} (V)	V_{INH} (V)	V_{DRM} (V)	V_F_Typ (V)	Viso (V_{rms})	I_{FT} (mA)
EL3031(P5)	7.12x6.5x3.5	3	20	250	--	5000	15
EL3032(P5)	7.12x6.5x3.5	3	20	250	--	5000	10
EL3033(P5)	7.12x6.5x3.5	3	20	250	--	5000	5
EL3041(P5)	7.12x6.5x3.5	3	20	400	--	5000	15
EL3042(P5)	7.12x6.5x3.5	3	20	400	--	5000	10
EL3043(P5)	7.12x6.5x3.5	3	20	400	--	5000	5
EL3061(P5)	7.12x6.5x3.5	3	20	600	--	5000	15
EL3062(P5)	7.12x6.5x3.5	3	20	600	--	5000	10
EL3063(P5)	7.12x6.5x3.5	3	20	600	--	5000	5
EL3081(P5)	7.12x6.5x3.5	3	20	800	--	5000	15
EL3082(P5)	7.12x6.5x3.5	3	20	800	--	5000	10
EL3083(P5)	7.12x6.5x3.5	3	20	800	--	5000	5
*EL3010(P5)	7.12x6.5x3.5	2.5	--	250	1.18	5000	15
*EL3011(P5)	7.12x6.5x3.5	2.5	--	250	1.18	5000	10
*EL3012(P5)	7.12x6.5x3.5	2.5	--	250	1.18	5000	5
*EL3021(P5)	7.12x6.5x3.5	2.5	--	400	1.18	5000	15
*EL3022(P5)	7.12x6.5x3.5	2.5	--	400	1.18	5000	10
*EL3023(P5)	7.12x6.5x3.5	2.5	--	400	1.18	5000	5
*EL3051(P5)	7.12x6.5x3.5	2.5	--	600	1.18	5000	15
*EL3052(P5)	7.12x6.5x3.5	2.5	--	600	1.18	5000	10
*EL3053(P5)	7.12x6.5x3.5	2.5	--	600	1.18	5000	5

Photo Coupler ▌Triac ▌6Pin DIP-DC

UNIT : mm

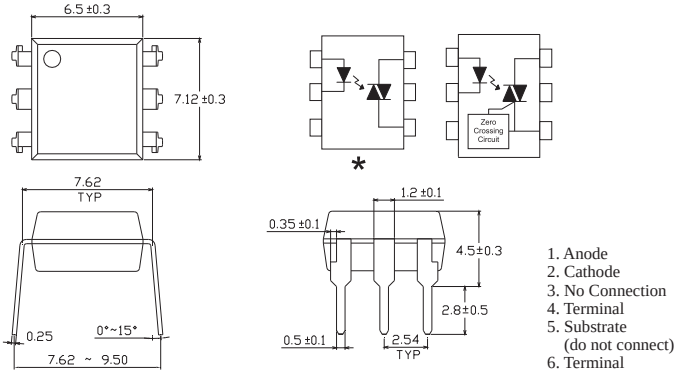

1. Anode
2. Cathode
3. No Connection
4. Terminal
5. Substrate
   (do not connect)
6. Terminal

Product	Size (LxWxHmm)	V_{TM} (V)	V_{INH} (V)	V_{DRM} (V)	V_{F}_Typ (V)	Viso (V_{rms})	I_{FT} (mA)
EL3031	7.12x6.5x3.5	3	20	250	--	5000	15
EL3032	7.12x6.5x3.5	3	20	250	--	5000	10
EL3033	7.12x6.5x3.5	3	20	250	--	5000	5
EL3041	7.12x6.5x3.5	3	20	400	--	5000	15
EL3042	7.12x6.5x3.5	3	20	400	--	5000	10
EL3043	7.12x6.5x3.5	3	20	400	--	5000	5
EL3061	7.12x6.5x3.5	3	20	600	--	5000	15
EL3062	7.12x6.5x3.5	3	20	600	--	5000	10
EL3063	7.12x6.5x3.5	3	20	600	--	5000	5
EL3081	7.12x6.5x3.5	3	20	800	--	5000	15
EL3082	7.12x6.5x3.5	3	20	800	--	5000	10
EL3083	7.12x6.5x3.5	3	20	800	--	5000	5
*EL3010	7.12x6.5x3.5	2.5	--	250	1.18	5000	15
*EL3011	7.12x6.5x3.5	2.5	--	250	1.18	5000	10
*EL3012	7.12x6.5x3.5	2.5	--	250	1.18	5000	5
*EL3021	7.12x6.5x3.5	2.5	--	400	1.18	5000	15
*EL3022	7.12x6.5x3.5	2.5	--	400	1.18	5000	10
*EL3023	7.12x6.5x3.5	2.5	--	400	1.18	5000	5
*EL3051	7.12x6.5x3.5	2.5	--	600	1.18	5000	15
*EL3052	7.12x6.5x3.5	2.5	--	600	1.18	5000	10
*EL3053	7.12x6.5x3.5	2.5	--	600	1.18	5000	5

Star mark * : Please refer to the schematic of Pin configuration with " * " mark

Photo Coupler ❙ Photo Power Triac ❙ 7pin DIP-DC

UNIT : mm

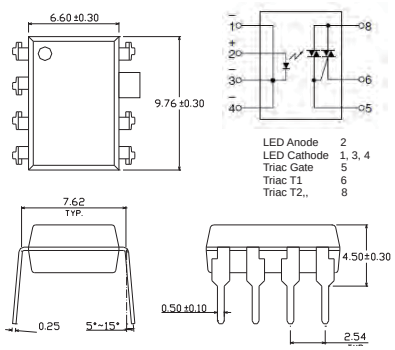

Product	Size (LxWxHmm)	IT(rms) (A)	VDRM (V)	ITSM(A)	VTM (V)	Viso (Vrms)	IFT (mA)
ELR0223	9.76x6.5x3.5	0.3	600V	3	2.5	5000	10
ELR3223	9.76x6.5x3.5	1.2	600V	12	2.5	5000	10

Photo Coupler ❙ Solid State Relay ❙ 4Pin DIP-DC

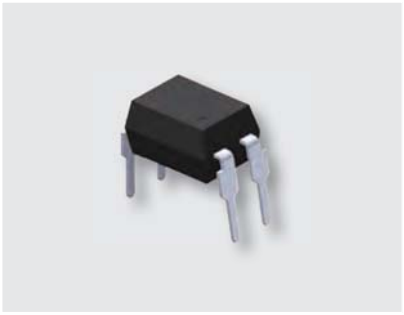

UNIT : mm

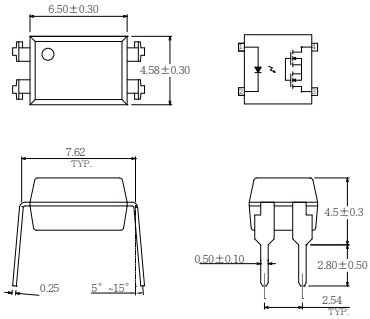

1. LED Anode
2. LED Cathode
3.4 MOSFET

Product	Size (LxWxHmm)	Output type	Load Voltage (V)	Load Current (mA)	Ron Typ.(Ω)	Ifon max. (mA)	Viso (Vrms)
EL406A	6.5×4.58×3.5	Normally Open 1a	60	550	0.75	5	5000
EL425A	6.5×4.58×3.5	Normally Open 1a	250	180	6.5	5	5000
EL440A	6.5×4.58×3.5	Normally Open 1a	400	120	20	5	5000
EL460A	6.5×4.58×3.5	Normally Open 1a	600	50	40	5	5000

Photo Coupler ▌Solid State Relay ▌6Pin DIP-DC

UNIT : mm

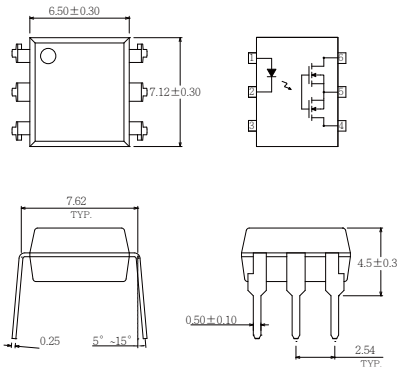

1. LED Anode
2. LED Cathode
3. No Connection
4.6 MOSFET Drain
5. MOSFET Source

Product	Size (LxWxHmm)	Output type	Load Voltage (V)	Load Current (mA)	Ron Typ.(Ω)	Ifon max. (mA)	Viso (Vrms)
EL606A	7.12×6.5×3.5	Normally Open 1a	60	550	0.75	3	5000
EL625A	7.12×6.5×3.5	Normally Open 1a	250	180	6.5	3	5000
EL640A	7.12×6.5×3.5	Normally Open 1a	400	120	20	3	5000
EL660A	7.12×6.5×3.5	Normally Open 1a	600	50	40	3	5000

Photo Coupler ▌Solid State Relay ▌8Pin DIP-DC

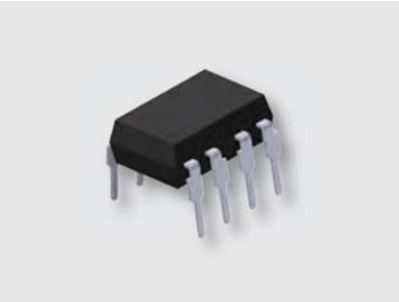

UNIT : mm

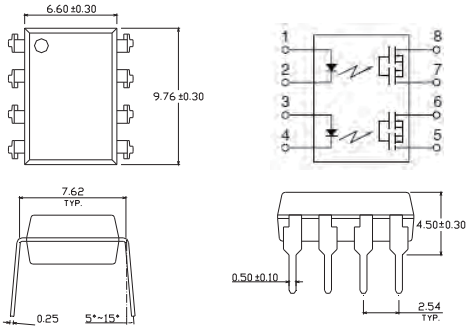

1, 3 LED Anode
2, 4 LED Cathode
8, 7, 6, 5 MOSFET

Product	Size (LxWxHmm)	Output type	Load Voltage (V)	Load Current (mA)	Ron Typ.(Ω)	Ifon max. (mA)	Viso (Vrms)
EL840A	9.76x6.5x3.5	Normally Open 2 Form A	400	120	20	5	5000
EL860A	9.76x6.5x3.5	Normally Open 2 Form A	600	50	40	5	5000

Notice

The content of this Catalogue is provided for informational purposes only. EVERLIGHT makes no representations about the accuracy, reliability, completeness of the information in this catalogue. EVERLIGHT may, at its sole discretion, revise the specifications, appearance, structures and materials herein without notice for the purpose of improvement. Please contact EVERLIGHT sales should you require more information on a product or its application.

This Catalogue does not contain any guarantee or agreed quality of EVERLIGHT's products or any warranty of merchantability, intellectual property, and fitness for a particular purpose. EVERLIGHT's obligation and responsibilities regarding its products are governed solely by the agreements under which they are sold. Unless otherwise agreed in writing, the information contained herein does not become part of the agreements.

The trademarks and logos ("Trademarks") displayed in this Catalogue are the property of EVERLIGHT and/or its affiliates. Nothing in this Catalogue should be construed as granting any licenses or right to the Trademarks. Without the express written consent of EVERLIGHT, the use of the Trademarks is prohibited.

All text, images, graphics and other materials contained in this Catalogue are subject to the copyright and other intellectual property rights of EVERLIGHT and/or its affiliates.

Structure and materials incorporated in LED packages may change according to customer's requests. Any LED package incorporating β-SiAlON phosphor are licensed by NIMS on the following Patents, Patent Publications and Patent Applications: Patent No. 3975451 (Japan), Patent No. 7,678,294 (US), Patent No. I-299055 (Taiwan), Patent No. ZL200580000742.3 (China), Patent Application No. 12/096,601 (US), Patent Application No. 2007-549180 (Japan), Patent Publication No. DE112005000044T5 (Germany), Patent Publication No.10-2007-0021140 (Korea), and Patent Publication No. EP1964905 (Europe).

Copyright © EVERLIGHT 2017

ASIA

CHINA

CHINA, HONG KONG
EVERLIGHT ELECTRONICS CO., LTD.
Units 1606-1610, 16/F., Prosperity Place,
6 Shing Yip Street, Kwun Tong, Kowloon,
Hong Kong
TEL: +852-23880602
FAX: +852-23881127, 23843092

CHINA, SHENZHEN
EVERLIGHT ELECTRONICS CO., LTD.
Room 1101-1102,3A Building,Period 1,
Tian An Cloud Park,NO.2018,Xuegang Road,
Bantian Sub-District,LongGangDistrict,
ShenZhen,GuangdongProvince,P,R,C
Postcode: 518116
TEL: +86-0755-2163-8620
FAX: +86-0755-2163-8764

CHINA, GUANGZHOU
EVERLIGHT ELECTRONICS CO., LTD.
1501 15 F1.,No.266 Xi Huan Road,
Sha Tou Street, Panyu District,
Guangzhou, China
Postcode: 511400
TEL: +86-(0)20-84663392
FAX: +86-(0)20-84663372

CHINA, SUZHOU
EVERLIGHT ELECTRONICS CO., LTD.
5F, Wanrong International Building, NO. 3158,
Renmin Rd., Gusu Dist., Suzhou City,
Jiangsu Province, P.R. China
Postcode: 215011
TEL: +86- 512-88605888
FAX: +86- 512-85188151

CHINA, QINGDAO
EVERLIGHT ELECTRONICS CO., LTD.
Room 317 (Building Dingdu), No. 133, Rd.
Fuzhou-North, District Shibei, Qingdao,
Shandong, China
TEL: +86-532-8091-6675
FAX: +86-532-8079-7372

CHINA, TIANJIN
EVERLIGHT ELECTRONICS CO., LTD
Room 505,Michael kuan in the valley of e
Imagination world, No 37. NanKai Three Road,
NanKai District,TianJin,China
Postcode: 300100
TEL: +86-22-26351122, 26351133

全国免费电话：400-6258-289

KOREA
EVERLIGHT OPTOELECTRONICS
KOREA CO., LTD.
7F S706-1 Garden 5 Works Choongmin Rd52.,
Songpa-gu, Seoul, KOREA.
TEL: +82-2-2047-3960
FAX: +82-2-2047-3961
EMAIL: terrychoi@everlight.com

JAPAN, TOKYO
EVERLIGHT JAPAN CORPORATION
4F MITA SUN BLDG., 1-3-35 MITA,
MINATO-KU, TOKYO, 108-0073, JAPAN
TEL: +81-3-5439-9296
FAX: +81-3-5439-9288
EMAIL: elj@everlight.com

JAPAN, KYOTO
EVERLIGHT JAPAN CORPORATION
7F, MITSUISEIMEI KYOTO YAMASHINA BLDG.
46-1, TAKEHANADOUNOMAECHOU,
YAMASHINA KU, KYOTO, 607-8085, JAPAN
TEL: +81-75-584-6070
FAX: +81-75-584-6080
EMAIL: everlightjapan@everlight.com

INDIA, BANGALORE
EVERLIGHT ELECTRONICS INDIA PVT LTD
Suit No. 3, 2nd Floor
Alpha Block. Sigma Soft Tech Park.
Varthur Kodi. Whitefield Main Road.
Bangalore: 560066
TEL: +91-080-41633111, +91-080-41623111
FAX: +91-080-41622111
EMAIL: salesindia@everlight.com

INDIA, DELHI
EVERLIGHT ELECTRONICS INDIA PRIVATED LTD.
Regus Green Boulevard
Level-5, Tower C, 3C Green Boulevard, Block B,
Sec-62, Noida:201301
TEL: +91-120-6608019
MOBEL: +91-981-1831442
EMAIL: anuj@everlight.com

MALAYSIA
EVERLIGHT OPTOELECTRONICS(M) SDN BHD
B-04-20 Krystal Point,
303 Jalan Sultan Azlan Shah,
11900 Penang, Malaysia
TEL: +60-4-646-4233
FAX: +60-4-646-5233
EMAIL: inquiry@everlight-pg.com.my

SINGAPORE
EVERLIGHT ELECTRONICS SINGAPORE PTE LTD
50 Tagore Lane , #04-11D,
Entrepreneur Centre, Singapore 787494.
TEL: +65-6511-2965
FAX: +65-6338-5486
EMAIL: contact@everlight.com.sg

AMERICA

TEXAS USA
EVERLIGHT AMERICAS INC.
3220 Commander Drive, Suite 100
Carrollton,Texas, 75006, United States
TEL: +1-972-490-4008
FAX: +1-972-490-5009
EMAIL: salesmarketing@everlightamericas.com

CALIFORNIA USA
Everlight Americas Inc. Ontario, California Office
4237 East Airport Dr.
Ontario, California 91761
TEL: +1-909 937-6070
FAX: +1-909 937-7619
EMAIL: salesmarketing@everlightamericas.com

EUROPE

GERMANY, HQ
EVERLIGHT ELECTRONICS EUROPE GMBH
Siemensallee 84, Building 7302, 5F
76187 Karlsruhe, Germany
TEL: +49-721-82447-3
FAX: +49-721-82447-40
EMAIL: Info@everlight-eu.de

GERMANY, MUNICH
EVERLIGHT ELECTRONICS EUROPE GMBH
Rote-Kreuz-Strasse 8, D-85737 Ismaning, Germany
TEL: +49-89-9400336-0
FAX: +49-89-9400336-29
EMAIL: info@everlight-eu.de

HEADQUARTERS

No. 6-8, Zhonghua Rd., Shulin Dist., New Taipei City, Taiwan 23860
TEL: +886-2-2685-6688 FAX: +886-2-2685-6699
www.everlight.com

ELCT(G)1702Q1800V1