# 1.4-W MONO FILTER-FREE CLASS-D AUDIO POWER AMPLIFIER

## FEATURES

- Qualified for Automotive Applications
- 1.4 W Into 8 Ω From a 5-V Supply at THD = 10% (Typ)
- Maximum Battery Life and Minimum Heat
  - Efficiency With an 8-Ω Speaker:
    - 84% at 400 mW
    - 79% at 100 mW
  - 2.8-mA Quiescent Current
  - 0.5-μA Shutdown Current
- Only Three External Components
  - Optimized PWM Output Stage Eliminates LC Output Filter
  - Internally Generated 250-kHz Switching Frequency Eliminates Capacitor and Resistor
  - Improved PSRR (–71 dB at 217 Hz) and Wide Supply Voltage (2.5 V to 5.5 V) Eliminates Need for a Voltage Regulator
  - Fully Differential Design Reduces RF Rectification and Eliminates Bypass Capacitor
  - Improved CMRR Eliminates Two Input Coupling Capacitors
- Space Saving Package
  - 3 mm x 3 mm QFN package (DRB)
  - 2,5 mm x 2,5 mm MicroStar Junior™ BGA Package (ZQY)
  - 3 mm x 5 mm MSOP PowerPAD™ Package (DGN)
  - TPA2010D1 Available in 1,45 mm x 1,45 mm WCSP (YZF)

## APPLICATIONS

- Ideal for Wireless or Cellular Handsets and PDAs

## DESCRIPTION

The TPA2005D1 is a 1.4-W high-efficiency filter-free class-D audio power amplifier in a MicroStar Junior™ BGA, QFN, or MSOP package that requires only three external components.

Features like 84% efficiency, –71-dB PSRR at 217 Hz, improved RF-rectification immunity, and 15-mm$^2$ total PCB area make the TPA2005D1 ideal for cellular handsets. A fast start-up time of 9 ms with minimal pop makes the TPA2005D1 ideal for PDA applications.

In cellular handsets, the earpiece, speaker phone, and melody ringer can each be driven by the TPA2005D1. The device allows independent gain control by summing the signals from each function, while minimizing noise to only 48 $\mu V_{RMS}$.

Data Sheet Directory

## APPLICATION CIRCUIT

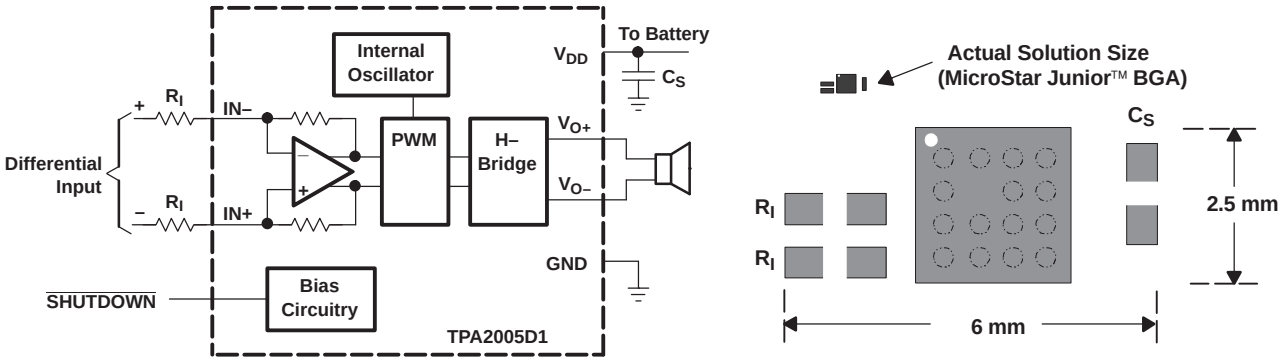


Please be aware that an important notice concerning availability, standard warranty, and use in critical applications of Texas Instruments semiconductor products and disclaimers thereto appears at the end of this data sheet.

MicroStar Junior, PowerPAD are trademarks of Texas Instruments.

PRODUCTION DATA information is current as of publication date. Products conform to specifications per the terms of the Texas Instruments standard warranty. Production processing does not necessarily include testing of all parameters.

Copyright © 2005–2008, Texas Instruments Incorporated

These devices have limited built-in ESD protection. The leads should be shorted together or the device placed in conductive foam during storage or handling to prevent electrostatic damage to the MOS gates.

## ORDERING INFORMATION(1)

| $T_A$ | PACKAGE(2) | | ORDERABLE PART NUMBER | TOP-SIDE MARKING |
|---|---|---|---|---|
| –40°C to 85°C | MicroStar Junior™ – GQY(3) | Reel of 2500 | TPA2005D1GQYRQ1 | PREVIEW |
| | MicroStar Junior™ – ZQY(3) | Reel of 2500 | TPA2005D1ZQYRQ1 | PREVIEW |
| | QFN – DRB | Reel of 3000 | TPA2005D1DRBRQ1 | BIQ |
| | MSOP – DGN | Reel of 2500 | TPA2005D1DGNRQ1 | 2005I |

(1) For the most current package and ordering information, see the Package Option Addendum at the end of this document, or see the TI web site at www.ti.com.
(2) Package drawings, thermal data, and symbolization are available at www.ti.com/packaging.
(3) The GQY is the standard MicroStar Junior™ package. The ZQY is the lead-free option and is qualified for 260° lead-free assembly.

## ABSOLUTE MAXIMUM RATINGS

over operating free-air temperature range unless otherwise noted(1)

| | | | |
|---|---|---|---|
| $V_{DD}$ | Supply voltage(2) | In active mode | –0.3 V to 6 V |
| | | In $\overline{\text{SHUTDOWN}}$ mode | –0.3 V to 7 V |
| $V_I$ | Input voltage | | –0.3 V to ($V_{DD}$ + 0.3 V) |
| | Continuous total power dissipation | | See Dissipation Rating Table |
| $T_A$ | Operating free-air temperature | | –40°C to 85°C |
| $T_J$ | Operating junction temperature | | –40°C to 150°C |
| $T_{stg}$ | Storage temperature | | –65°C to 85°C |
| | Lead temperature 1,6 mm (1/16 inch) from case for 10 seconds | | 260°C |

(1) Stresses beyond those listed under "absolute maximum ratings" may cause permanent damage to the device. These are stress ratings only, and functional operation of the device at these or any other conditions beyond those indicated under "recommended operating conditions" is not implied. Exposure to absolute-maximum-rated conditions for extended periods may affect device reliability.
(2) For the MSOP (DGN) package option, the maximum $V_{DD}$ should be limited to 5 V if short-circuit protection is desired.

## RECOMMENDED OPERATING CONDITIONS

| | | | MIN | MAX | UNIT |
|---|---|---|---|---|---|
| $V_{DD}$ | Supply voltage | | 2.5 | 5.5 | V |
| $V_{IH}$ | High-level input voltage | $\overline{\text{SHUTDOWN}}$ | 2 | $V_{DD}$ | V |
| $V_{IL}$ | Low-level input voltage | $\overline{\text{SHUTDOWN}}$ | 0 | 0.7 | V |
| $R_I$ | Input resistor | Gain ≤ 20 V/V (26 dB) | 15 | | kΩ |
| $V_{IC}$ | Common-mode input voltage range | $V_{DD}$ = 2.5 V, 5.5 V, CMRR ≤ –49 dB | 0.5 | $V_{DD}$ – 0.8 | V |
| $T_A$ | Operating free-air temperature | | –40 | 85 | °C |

## DISSIPATION RATINGS

| PACKAGE | DERATING FACTOR | $T_A$ ≤ 25°C POWER RATING | $T_A$ = 70°C POWER RATING | $T_A$ = 85°C POWER RATING |
|---|---|---|---|---|
| GQY, ZQY | 16 mW/°C | 2 W | 1.28 W | 1.04 W |
| DRB | 21.8 mW/°C | 2.7 W | 1.7 W | 1.4 W |
| DGN | 17.1 mW/°C | 2.13 W | 1.36 W | 1.11 W |


Copyright © 2005–2008, Texas Instruments Incorporated

## ELECTRICAL CHARACTERISTICS

$T_A$ = –40°C to 85°C (unless otherwise noted)

| PARAMETER | | TEST CONDITIONS | | MIN | TYP | MAX | UNIT |
|---|---|---|---|---|---|---|---|
| $\|V_{OS}\|$ | Output offset voltage (measured differentially) | $V_I$ = 0 V, $A_V$ = 2 V/V, $V_{DD}$ = 2.5 V to 5.5 V | | | | 25 | mV |
| PSRR | Power-supply rejection ratio | $V_{DD}$ = 2.5 V to 5.5 V | | | –75 | –55 | dB |
| CMRR | Common-mode rejection ratio | $V_{DD}$ = 2.5 V to 5.5 V, $V_{IC}$ = $V_{DD}$/2 to 0.5 V, $V_{IC}$ = $V_{DD}$/2 to $V_{DD}$ – 0.8 V | $T_A$ = 25°C | | –68 | –49 | dB |
| | | | $T_A$ = –40°C to 85°C | | | –35 | |
| $\|I_{IH}\|$ | High-level input current | $V_{DD}$ = 5.5 V, $V_I$ = 5.8 V | | | | 50 | µA |
| $\|I_{IL}\|$ | Low-level input current | $V_{DD}$ = 5.5 V, $V_I$ = 0.3 V | | | | 4 | µA |
| $I_{(Q)}$ | Quiescent current | $V_{DD}$ = 5.5 V, no load | | | 3.4 | 4.5 | mA |
| | | $V_{DD}$ = 3.6 V, no load | | | 2.8 | | |
| | | $V_{DD}$ = 2.5 V, no load | | | 2.2 | 3.2 | |
| $I_{(SD)}$ | Shutdown current | $V_{\overline{(SHUTDOWN)}}$ = 0.8 V, $V_{DD}$ = 2.5 V to 5.5 V | | | 0.5 | 2 | µA |
| $r_{DS(on)}$ | Static drain-source on-state resistance | $V_{DD}$ = 2.5 V | | | 770 | | mΩ |
| | | $V_{DD}$ = 3.6 V | | | 590 | | |
| | | $V_{DD}$ = 5.5 V | | | 500 | | |
| | Output impedance in SHUTDOWN | $V_{\overline{(SHUTDOWN)}}$ = 0.8 V | | | >1 | | kΩ |
| $f_{(sw)}$ | Switching frequency | $V_{DD}$ = 2.5 V to 5.5 V | | 200 | 250 | 300 | kHz |
| | Gain | | | $2 \times \frac{142\ k\Omega}{R_I}$ | $2 \times \frac{150\ k\Omega}{R_I}$ | $2 \times \frac{158\ k\Omega}{R_I}$ | $\frac{V}{V}$ |

## OPERATING CHARACTERISTICS

$T_A$ = 25°C, Gain = 2 V/V, $R_L$ = 8 Ω (unless otherwise noted)

| PARAMETER | | TEST CONDITIONS | | MIN | TYP | MAX | UNIT |
|---|---|---|---|---|---|---|---|
| $P_O$ | Output power | THD + N= 1%, f = 1 kHz, $R_L$ = 8 Ω | $V_{DD}$ = 5 V | | 1.18 | | W |
| | | | $V_{DD}$ = 3.6 V | | 0.58 | | |
| | | | $V_{DD}$ = 2.5 V | | 0.26 | | |
| | | THD + N= 10%, f = 1 kHz, $R_L$ = 8 Ω | $V_{DD}$ = 5 V | | 1.45 | | W |
| | | | $V_{DD}$ = 3.6 V | | 0.75 | | |
| | | | $V_{DD}$ = 2.5 V | | 0.35 | | |
| THD+N | Total harmonic distortion plus noise | $P_O$ = 1 W, f = 1 kHz, $R_L$ = 8 Ω | $V_{DD}$ = 5 V | | 0.18% | | |
| | | $P_O$ = 0.5 W, f = 1 kHz, $R_L$ = 8 Ω | $V_{DD}$ = 3.6 V | | 0.19% | | |
| | | $P_O$ = 200 mW, f = 1 kHz, $R_L$ = 8 Ω | $V_{DD}$ = 2.5 V | | 0.20% | | |
| $k_{SVR}$ | Supply ripple rejection ratio | f = 217 Hz, $V_{(RIPPLE)}$ = 200 $mV_{pp}$, Inputs ac-grounded with $C_i$ = 2 µF | $V_{DD}$ = 3.6 V | | –71 | | dB |
| SNR | Signal-to-noise ratio | $P_O$= 1 W, $R_L$ = 8 Ω | $V_{DD}$ = 5 V | | 97 | | dB |
| $V_n$ | Output voltage noise | $V_{DD}$ = 3.6 V, f = 20 Hz to 20 kHz, Inputs ac-grounded with $C_i$ = 2 µF | No weighting | | 48 | | $\mu V_{RMS}$ |
| | | | A weighting | | 36 | | |
| CMRR | Common-mode rejection ratio | $V_{IC}$ = 1 $V_{pp}$ , f = 217 Hz | $V_{DD}$ = 3.6 V | | –63 | | dB |
| $Z_I$ | Input impedance | | | 142 | 150 | 158 | kΩ |
| | Start-up time from shutdown | | $V_{DD}$ = 3.6 V | | 9 | | ms |

Copyright © 2005–2008, Texas Instruments Incorporated

## PIN ASSIGNMENTS

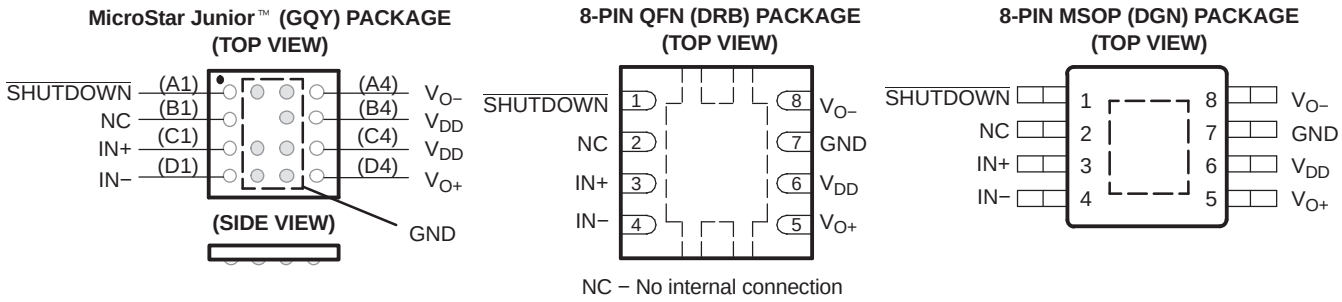


NC − No internal connection

A. The shaded terminals are used for electrical and thermal connections to the ground plane. All of the shaded terminals must be electrically connected to ground. No connect (NC) terminals still need a pad and trace.

B. The thermal pad of the DRB and DGN packages must be electrically and thermally connected to a ground plane.

### Terminal Functions

| TERMINAL | | | I/O | DESCRIPTION |
|---|---|---|---|---|
| NAME | NO. | | | |
| | ZQY, GQY | DRB, DGN | | |
| IN– | D1 | 4 | I | Negative differential input |
| IN+ | C1 | 3 | I | Positive differential input |
| $V_{DD}$ | B4, C4 | 6 | I | Power supply |
| $V_{O+}$ | D4 | 5 | O | Positive BTL output |
| GND | A2, A3, B3, C2, C3, D2, D3 | 7 | I | High-current ground |
| $V_{O–}$ | A4 | 8 | O | Negative BTL output |
| $\overline{SHUTDOWN}$ | A1 | 1 | I | Shutdown terminal (active low logic) |
| NC | B1 | 2 | | No internal connection |
| Thermal Pad | | | | Must be soldered to a grounded pad on the PCB. |

## FUNCTIONAL BLOCK DIAGRAM

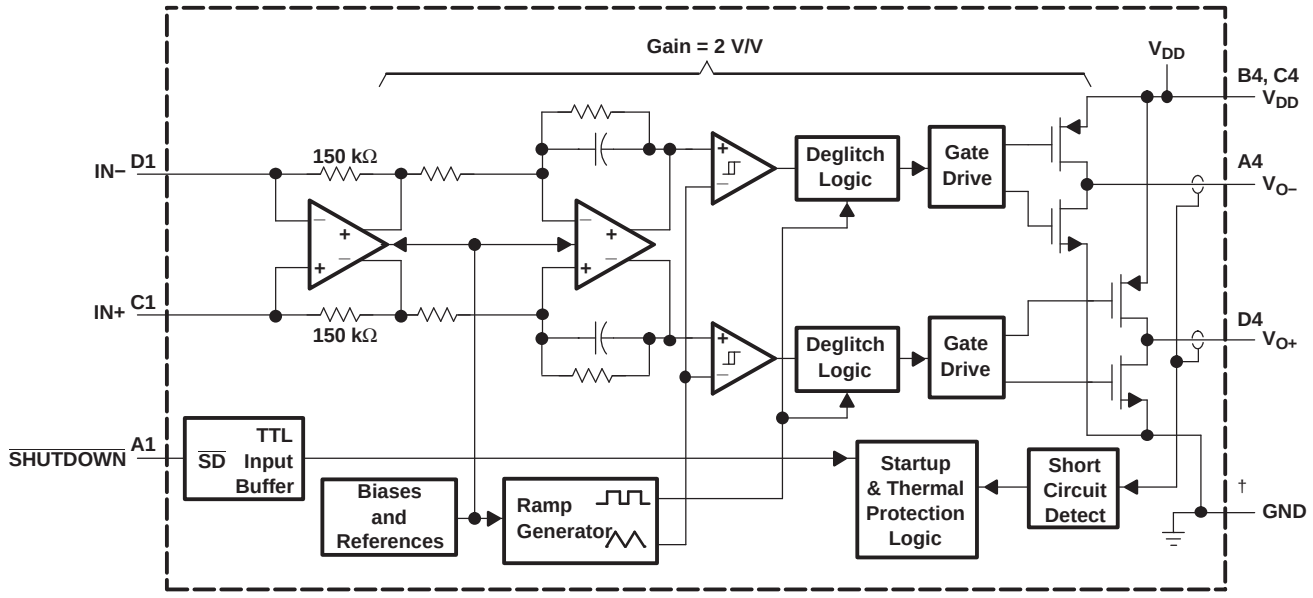


† A2, A3, B3, C2, C3, D2, D3
(terminal labels for MicroStar Junior™ package)


Copyright © 2005–2008, Texas Instruments Incorporated

## TYPICAL CHARACTERISTICS

### Table of Graphs

| | | | FIGURE |
|---|---|---|---|
| | Efficiency | vs Output power | 1, 2 |
| $P_D$ | Power dissipation | vs Output power | 3 |
| | Supply current | vs Output power | 4, 5 |
| $I_{(Q)}$ | Quiescent current | vs Supply voltage | 6 |
| $I_{(SD)}$ | Shutdown current | vs Shutdown voltage | 7 |
| $P_O$ | Output power | vs Supply voltage | 8 |
| | | vs Load resistance | 9, 10 |
| THD+N | Total harmonic distortion plus noise | vs Output power | 11, 12 |
| | | vs Frequency | 13, 14, 15, 16 |
| | | vs Common-mode input voltage | 17 |
| $k_{SVR}$ | Supply-voltage rejection ratio | vs Frequency | 18, 19, 20 |
| | | vs Common-mode input voltage | 21 |
| | GSM power-supply rejection | vs Time | 22 |
| | | vs Frequency | 23 |
| CMRR | Common-mode rejection ratio | vs Frequency | 24 |
| | | vs Common-mode input voltage | 25 |

## TEST SETUP FOR GRAPHS

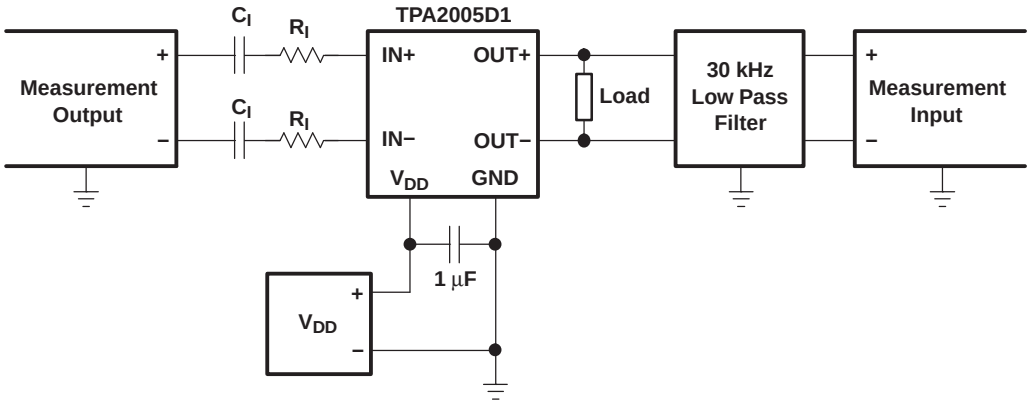


A. $C_I$ was shorted for any common-mode input voltage measurement.

B. A 33-µH inductor was placed in series with the load resistor to emulate a small speaker for efficiency measurements.

C. The 30-kHz low-pass filter is required, even if the analyzer has a low-pass filter. An RC filter (100 Ω, 47 nF) is used on each output for the data sheet graphs.

Copyright © 2005–2008, Texas Instruments Incorporated

**EFFICIENCY vs OUTPUT POWER**

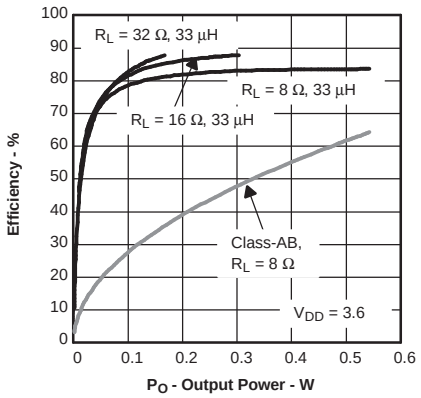


**Figure 1.**

**EFFICIENCY vs OUTPUT POWER**

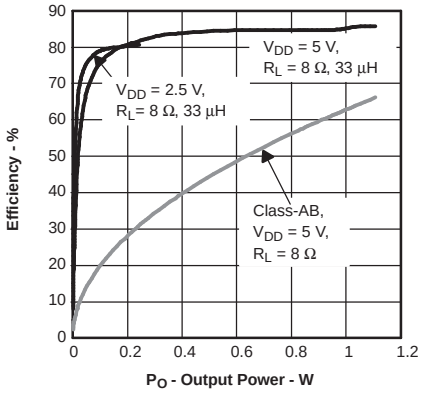


**Figure 2.**

**POWER DISSIPATION vs OUTPUT POWER**

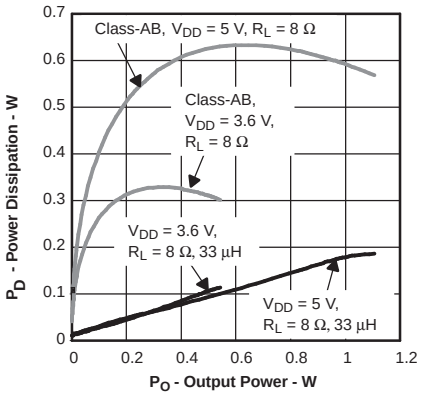


**Figure 3.**

**SUPPLY CURRENT vs OUTPUT POWER**

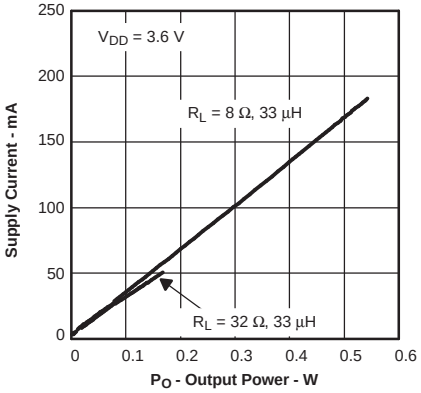


**Figure 4.**

**SUPPLY CURRENT vs OUTPUT POWER**

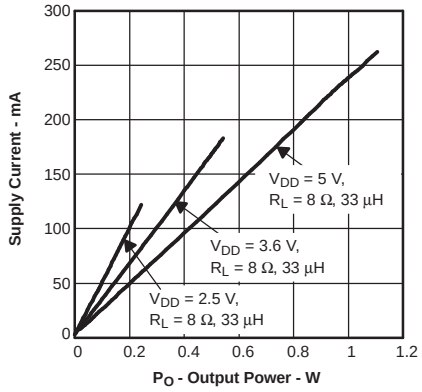


**Figure 5.**

**QUIESCENT CURRENT vs SUPPLY VOLTAGE**

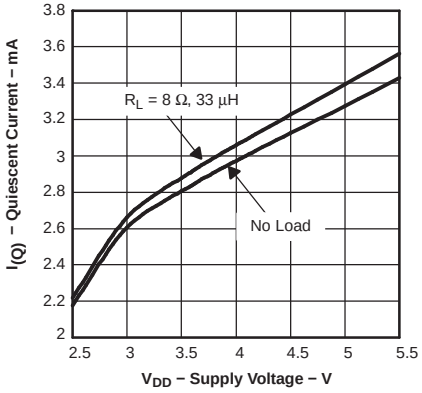


**Figure 6.**

**SHUTDOWN CURRENT vs SHUTDOWN VOLTAGE**

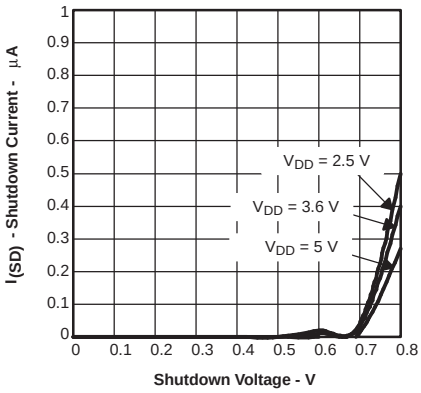


**Figure 7.**

**OUTPUT POWER vs SUPPLY VOLTAGE**

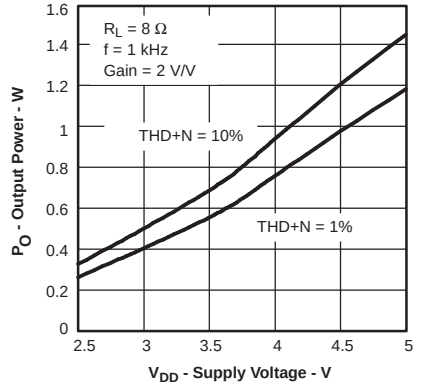


**Figure 8.**

**OUTPUT POWER vs LOAD RESISTANCE**

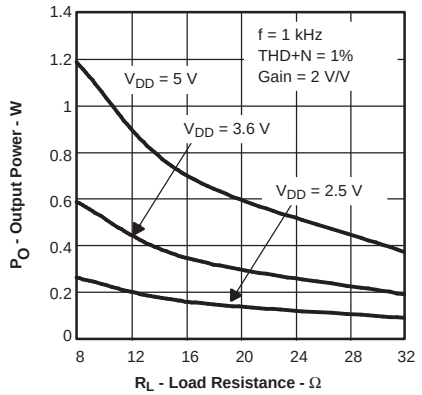


**Figure 9.**


Copyright © 2005–2008, Texas Instruments Incorporated

**OUTPUT POWER vs LOAD RESISTANCE**

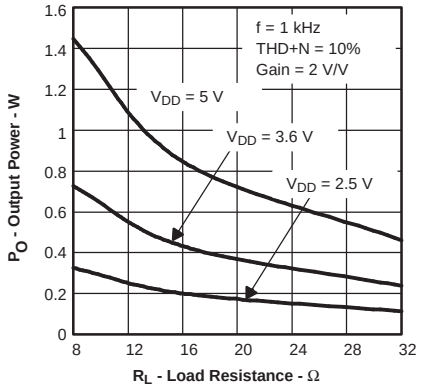


**Figure 10.**

**TOTAL HARMONIC DISTORTION + NOISE vs OUTPUT POWER**

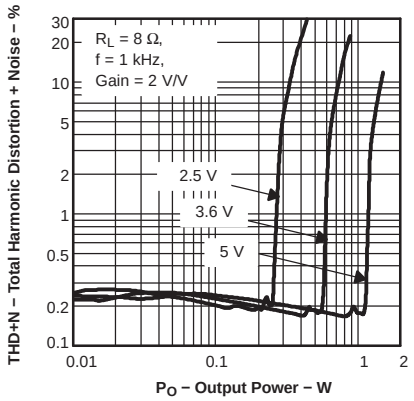


**Figure 11.**

**TOTAL HARMONIC DISTORTION + NOISE vs OUTPUT POWER**

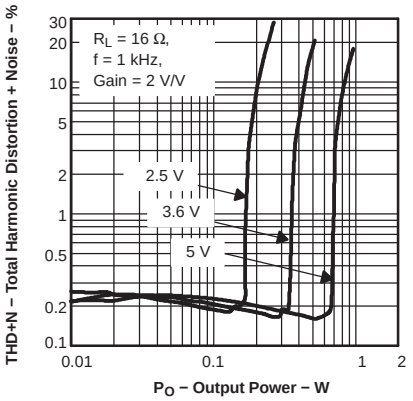


**Figure 12.**

**TOTAL HARMONIC DISTORTION + NOISE vs FREQUENCY**

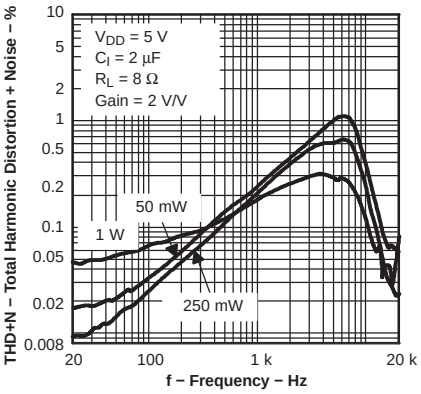


**Figure 13.**

**TOTAL HARMONIC DISTORTION + NOISE vs FREQUENCY**

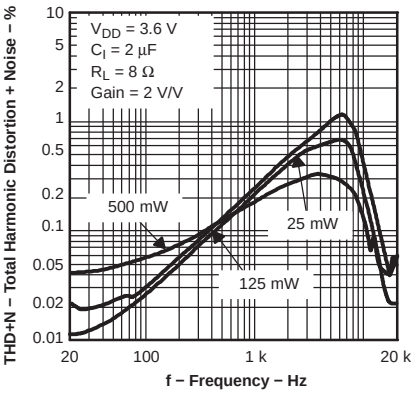


**Figure 14.**

**TOTAL HARMONIC DISTORTION + NOISE vs FREQUENCY**

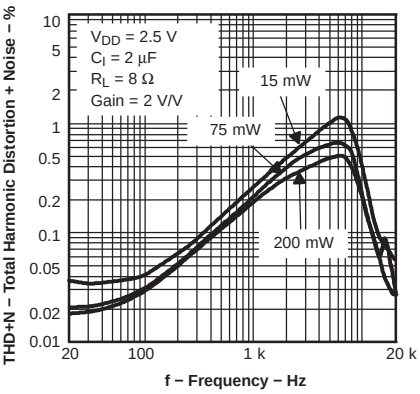


**Figure 15.**

**TOTAL HARMONIC DISTORTION + NOISE vs FREQUENCY**

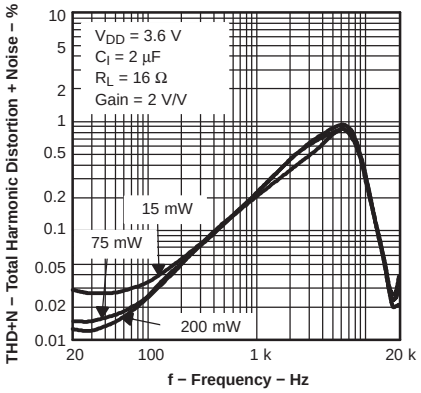


**Figure 16.**

**TOTAL HARMONIC DISTORTION + NOISE vs COMMON MODE INPUT VOLTAGE**

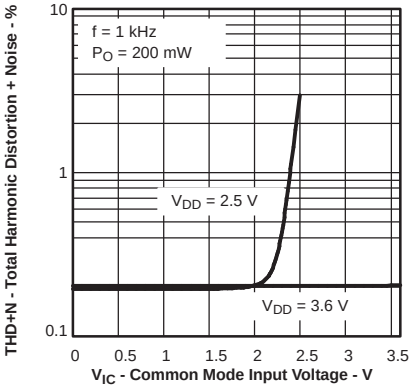


**Figure 17.**

**SUPPLY-VOLTAGE REJECTION RATIO vs FREQUENCY**

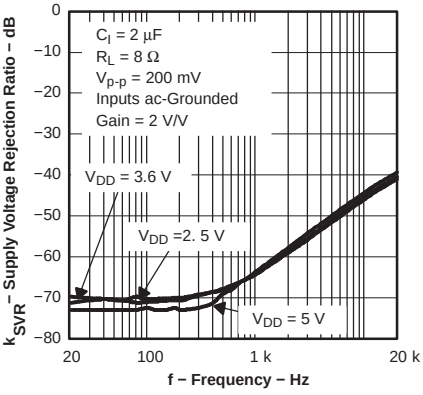


**Figure 18.**

SUPPLY-VOLTAGE REJECTION RATIO vs FREQUENCY

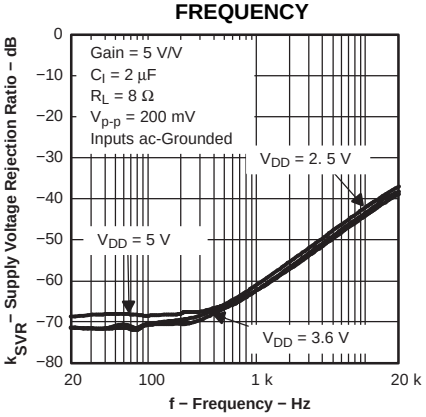


Figure 19.

SUPPLY-VOLTAGE REJECTION RATIO vs FREQUENCY

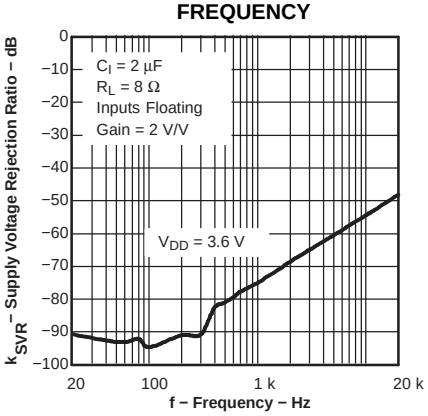


Figure 20.

SUPPLY-VOLTAGE REJECTION RATIO vs COMMON-MODE INPUT VOLTAGE

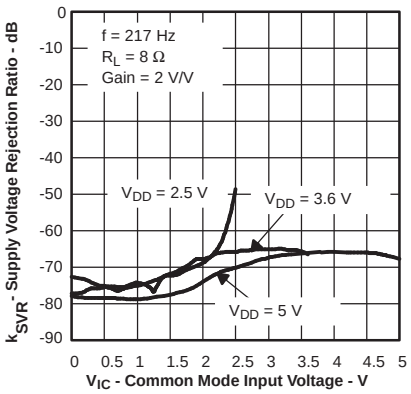


Figure 21.

GSM POWER-SUPPLY REJECTION vs TIME

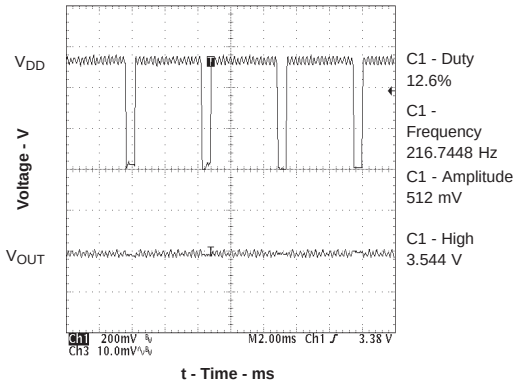


Figure 22.

GSM POWER-SUPPLY REJECTION vs FREQUENCY

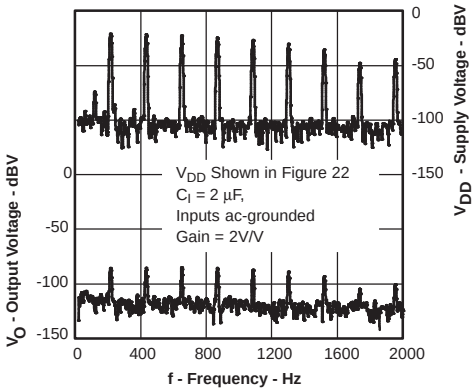


Figure 23.

COMMON-MODE REJECTION RATIO vs FREQUENCY

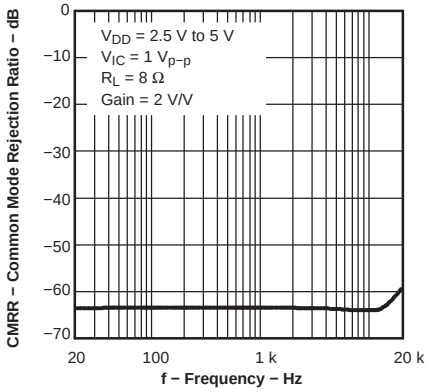


Figure 24.

COMMON-MODE REJECTION RATIO vs COMMON-MODE INPUT VOLTAGE

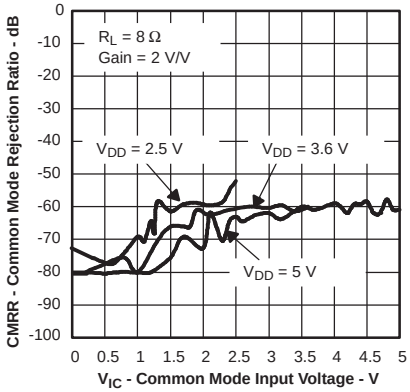


Figure 25.


Copyright © 2005–2008, Texas Instruments Incorporated

# APPLICATION INFORMATION

## FULLY DIFFERENTIAL AMPLIFIER

The TPA2005D1 is a fully differential amplifier with differential inputs and outputs. The fully differential amplifier consists of a differential amplifier and a common-mode amplifier. The differential amplifier ensures that the amplifier outputs a differential voltage on the output that is equal to the differential input times the gain. The common-mode feedback ensures that the common-mode voltage at the output is biased around $V_{DD}/2$, regardless of the common-mode voltage at the input. The fully differential TPA2005D1 can still be used with a single-ended input; however, the TPA2005D1 should be used with differential inputs when in a noisy environment, like a wireless handset, to ensure maximum noise rejection.

### Advantages of Fully Differential Amplifiers

- Input-coupling capacitors not required:
  - The fully differential amplifier allows the inputs to be biased at a voltage other than mid-supply. For example, if a codec has a mid-supply lower than the mid-supply of the TPA2005D1, the common-mode feedback circuit adjusts, and the TPA2005D1 outputs still is biased at mid-supply of the TPA2005D1. The inputs of the TPA2005D1 can be biased from 0.5 V to $V_{DD}$ – 0.8 V. If the inputs are biased outside of that range, input-coupling capacitors are required.
- Mid-supply bypass capacitor, $C_{(BYPASS)}$, not required:
  - The fully differential amplifier does not require a bypass capacitor. This is because any shift in the mid-supply affects both positive and negative channels equally and cancels at the differential output.
- Better RF immunity:
  - GSM handsets save power by turning on and shutting off the RF transmitter at a rate of 217 Hz. The transmitted signal is picked up on input and output traces. The fully differential amplifier cancels the signal much better than the typical audio amplifier.

## COMPONENT SELECTION

Figure 26 shows the TPA2005D1 typical schematic with differential inputs, and Figure 27 shows the TPA2005D1 with differential inputs and input capacitors, and Figure 28 shows the TPA2005D1 with single-ended inputs. Differential inputs should be used whenever possible, because the single-ended inputs are much more susceptible to noise.

**Table 1. Typical Component Values**

| REF DES | VALUE | EIA SIZE | MANUFACTURER | PART NUMBER |
|---|---|---|---|---|
| $R_I$ | 150 kΩ (±0.5%) | 0402 | Panasonic | ERJ2RHD154V |
| $C_S$ | 1 µF (+22%, –80%) | 0402 | Murata | GRP155F50J105Z |
| $C_I$ (1) | 3.3 nF (±10%) | 0201 | Murata | GRP033B10J332K |

(1) $C_I$ is needed only for single-ended input or if $V_{ICM}$ is not between 0.5 V and $V_{DD}$ – 0.8 V. $C_I$ = 3.3 nF (with $R_I$ = 150 kΩ) gives a high-pass corner frequency of 321 Hz.

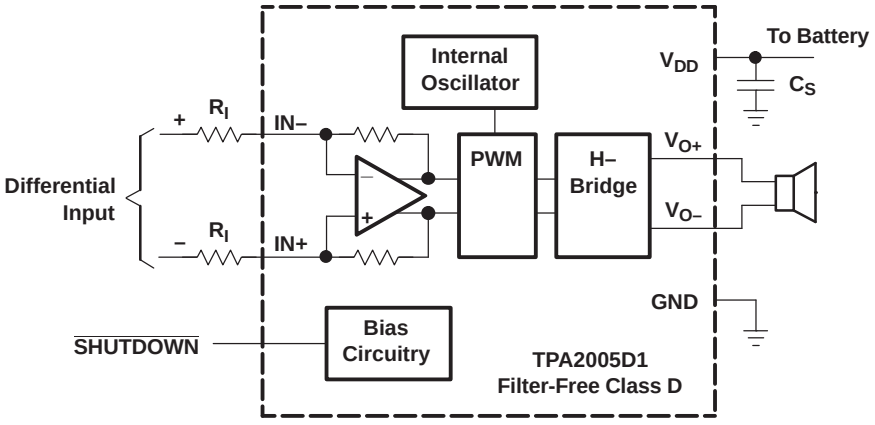


**Figure 26. Typical TPA2005D1 Application Schematic With Differential Input for a Wireless Phone**

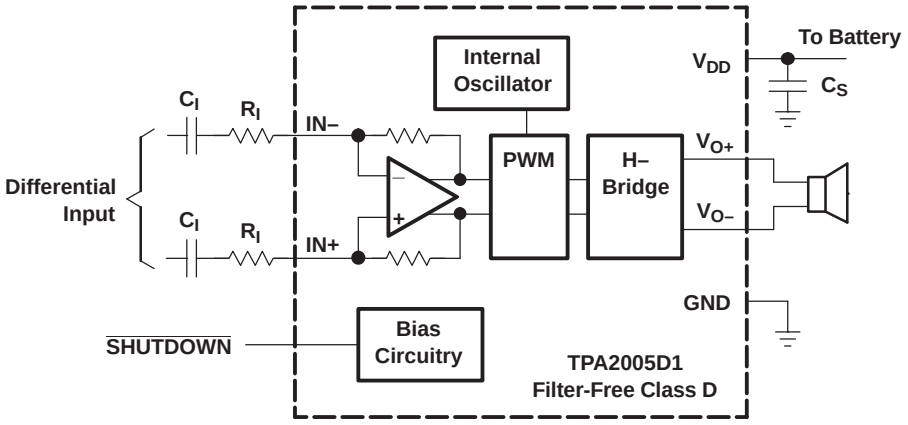


**Figure 27. TPA2005D1 Application Schematic With Differential Input and Input Capacitors**

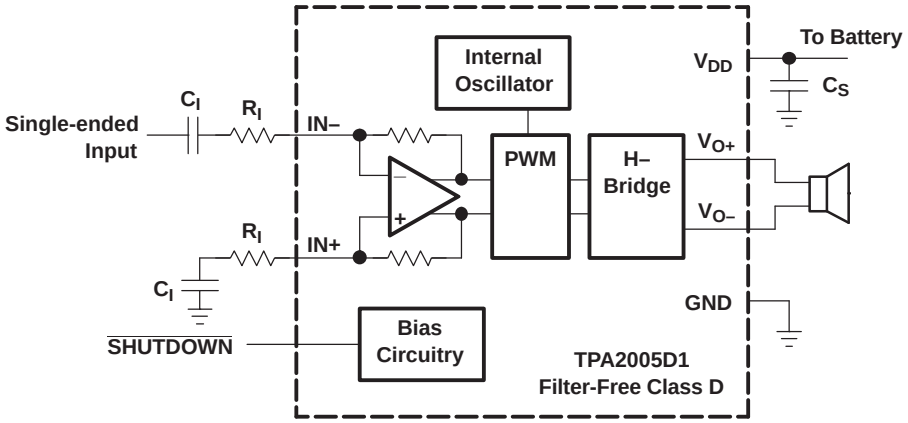


**Figure 28. TPA2005D1 Application Schematic With Single-Ended Input**


Copyright © 2005–2008, Texas Instruments Incorporated

### Input Resistors ($R_I$)

The input resistors ($R_I$) set the gain of the amplifier according to equation Equation 1.

$$\text{Gain} = 2 \times \frac{150\ \text{k}\Omega}{R_I} \tag{1}$$

**Resistor matching is very important in fully differential amplifiers.** The balance of the output on the reference voltage depends on matched ratios of the resistors. CMRR, PSRR, and cancellation of the second harmonic distortion diminish if resistor mismatch occurs. Therefore, it is recommended to use 1% tolerance resistors, or better, to keep the performance optimized. Matching is more important than overall tolerance. Resistor arrays with 1% matching can be used with a tolerance greater than 1%.

Place the input resistors very close to the TPA2005D1 to limit noise injection on the high-impedance nodes.

For optimal performance, the gain should be set to 2 V/V or lower. Lower gain allows the TPA2005D1 to operate at its best and keeps a high voltage at the input, making the inputs less susceptible to noise.

### Decoupling Capacitor ($C_S$)

The TPA2005D1 is a high-performance class-D audio amplifier that requires adequate power-supply decoupling to ensure the efficiency is high and total harmonic distortion (THD) is low. For higher frequency transients, spikes, or digital hash on the line, a good low equivalent-series-resistance (ESR) ceramic capacitor, typically 1 µF, placed as close as possible to the device $V_{DD}$ lead, works best. Placing this decoupling capacitor close to the TPA2005D1 is very important for the efficiency of the class-D amplifier, because any resistance or inductance in the trace between the device and the capacitor can cause a loss in efficiency. For filtering lower-frequency noise signals, a 10-µF, or greater, capacitor placed near the audio power amplifier also helps, but it is not required in most applications because of the high PSRR of this device.

### Input Capacitors ($C_I$)

The TPA2005D1 does not require input coupling capacitors if the design uses a differential source that is biased from 0.5 V to $V_{DD}$ – 0.8 V (shown in Figure 26). If the input signal is not biased within the recommended common-mode input range, if needing to use the input as a high pass filter (shown in Figure 27), or if using a single-ended source (shown in Figure 28), input coupling capacitors are required.

The input capacitors and input resistors form a high-pass filter with the corner frequency, $f_c$, determined in Equation 2.

$$f_C = \frac{1}{\left(2\pi\, R_I C_I\right)} \tag{2}$$

The value of the input capacitor is important to consider, as it directly affects the bass (low frequency) performance of the circuit. Speakers in wireless phones usually cannot respond well to low frequencies, so the corner frequency can be set to block low frequencies in this application.

Equation 3 is reconfigured to solve for the input coupling capacitance.

$$C_I = \frac{1}{\left(2\pi\, R_I\, f_C\right)} \tag{3}$$

If the corner frequency is within the audio band, the capacitors should have a tolerance of ±10% or better, because any mismatch in capacitance causes an impedance mismatch at the corner frequency and below.

For a flat low-frequency response, use large input coupling capacitors (1 µF). However, in a GSM phone the ground signal is fluctuating at 217 Hz, but the signal from the codec does not have the same 217-Hz fluctuation. The difference between the two signals is amplified, sent to the speaker, and heard as a 217-Hz hum.

Copyright © 2005–2008, Texas Instruments Incorporated

## SUMMING INPUT SIGNALS WITH THE TPA2005D1

Most wireless phones or PDAs need to sum signals at the audio power amplifier or just have two signal sources that need separate gain. The TPA2005D1 makes it easy to sum signals or use separate signal sources with different gains. Many phones now use the same speaker for the earpiece and ringer, where the wireless phone would require a much lower gain for the phone earpiece than for the ringer. PDAs and phones that have stereo headphones require summing of the right and left channels to output the stereo signal to the mono speaker.

### Summing Two Differential Input Signals

Two extra resistors are needed for summing differential signals (a total of 5 components). The gain for each input source can be set independently (see Equation 4 and Equation 5 and Figure 29).

$$\text{Gain 1} = \frac{V_O}{V_{I1}} = 2 \times \frac{150\ \text{k}\Omega}{R_{I1}} \quad \left(\frac{V}{V}\right) \tag{4}$$

$$\text{Gain 2} = \frac{V_O}{V_{I2}} = 2 \times \frac{150\ \text{k}\Omega}{R_{I2}} \quad \left(\frac{V}{V}\right) \tag{5}$$

If summing left and right inputs with a gain of 1 V/V, use $R_{I1}$= $R_{I2}$= 300 kΩ.

If summing a ring tone and a phone signal, set the ring-tone gain to gain 2 = 2 V/V, and the phone gain to gain 1 = 0.1 V/V. The resistor values are:

- $R_{I1}$ = 3 MΩ and $R_{I2}$ = 150 kΩ.

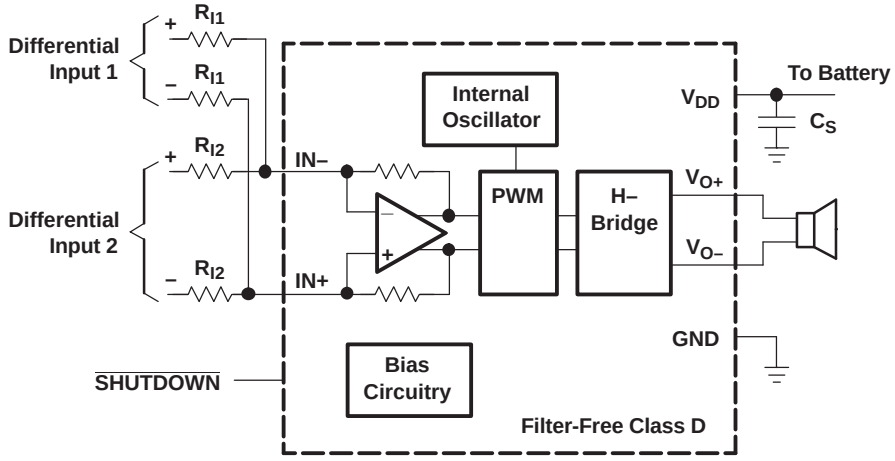


**Figure 29. Application Schematic With TPA2005D1 Summing Two Differential Inputs**

### Summing a Differential Input Signal and a Single-Ended Input Signal

Figure 30 shows how to sum a differential input signal and a single-ended input signal. Ground noise can couple in through IN+ with this method. It is better to use differential inputs. The corner frequency of the single-ended input is set by $C_{I2}$, shown in Equation 8. To ensure that each input is balanced, the single-ended input must be driven by a low-impedance source even if the input is not in use.

$$\text{Gain 1} = \frac{V_O}{V_{I1}} = 2 \times \frac{150\ \text{k}\Omega}{R_{I1}} \quad \left(\frac{V}{V}\right) \tag{6}$$

$$\text{Gain 2} = \frac{V_O}{V_{I2}} = 2 \times \frac{150\ \text{k}\Omega}{R_{I2}} \quad \left(\frac{V}{V}\right) \tag{7}$$

$$C_{I2} = \frac{1}{\left(2\pi\, R_{I2}\, f_{c2}\right)} \tag{8}$$


Copyright © 2005–2008, Texas Instruments Incorporated

If summing a ring tone and a phone signal, the phone signal should use a differential input signal while the ring tone might be limited to a single-ended signal. If phone gain is set at gain 1 = 0.1 V/V, and the ring-tone gain is set to gain 2 = 2 V/V, the resistor values are:

- $R_{I1}$ = 3 MΩ and $R_{I2}$ = 150 kΩ.

The high-pass corner frequency of the single-ended input is set by $C_{I2}$. If the desired corner frequency is less than 20 Hz, then:

$$C_{I2} > \frac{1}{(2\pi\ 150k\Omega\ 20Hz)} \quad (9)$$

$$C_{I2} > 53pF \quad (10)$$

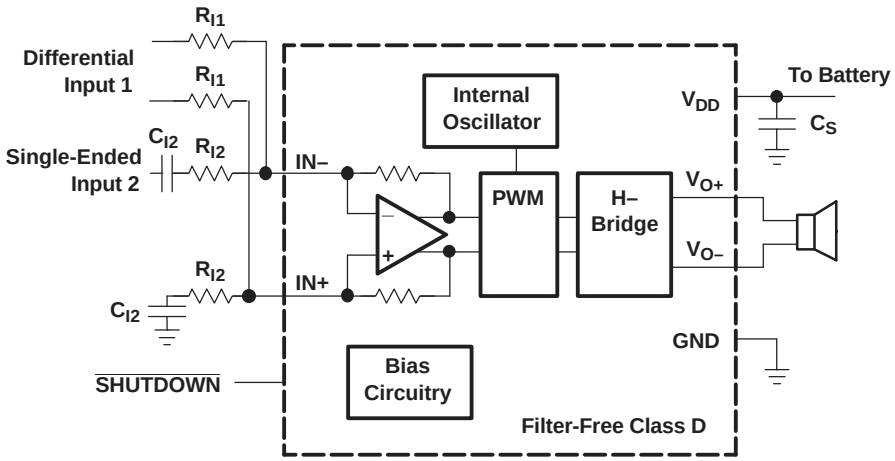


**Figure 30. Application Schematic With TPA2005D1 Summing Differential Input and Single-Ended Input Signals**

### Summing Two Single-Ended Input Signals

Four resistors and three capacitors are needed for summing single-ended input signals. The gain and corner frequencies ($f_{c1}$ and $f_{c2}$) for each input source can be set independently (see Equation 11 through Equation 14 and Figure 31). Resistor, $R_P$, and capacitor, $C_P$, are needed on the IN+ terminal to match the impedance on the IN– terminal. The single-ended inputs must be driven by low-impedance sources, even if one of the inputs is not outputting an ac signal.

$$\text{Gain 1} = \frac{V_O}{V_{I1}} = 2 \times \frac{150\ \text{k}\Omega}{R_{I1}} \quad \left(\frac{V}{V}\right) \tag{11}$$

$$\text{Gain 2} = \frac{V_O}{V_{I2}} = 2 \times \frac{150\ \text{k}\Omega}{R_{I2}} \quad \left(\frac{V}{V}\right) \tag{12}$$

$$C_{I1} = \frac{1}{\left(2\pi\, R_{I1}\, f_{c1}\right)} \tag{13}$$

$$C_{I2} = \frac{1}{\left(2\pi\, R_{I2}\, f_{c2}\right)} \tag{14}$$

$$C_P = C_{I1} + C_{I2} \tag{15}$$

$$R_P = \frac{R_{I1} \times R_{I2}}{\left(R_{I1} + R_{I2}\right)} \tag{16}$$

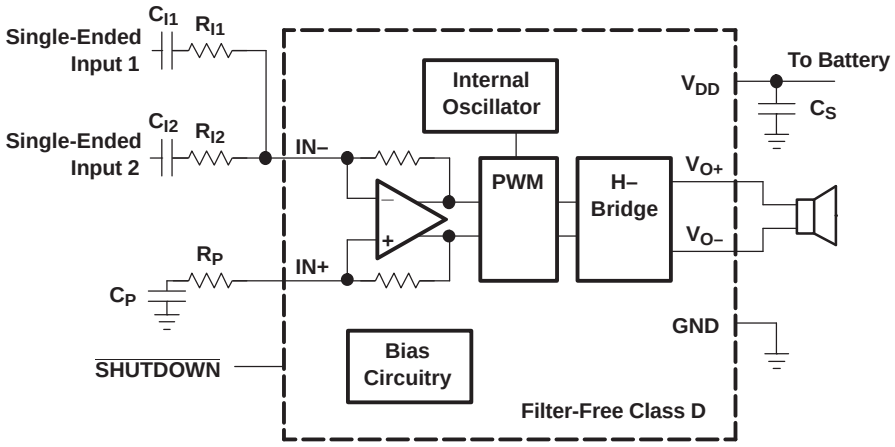


**Figure 31. Application Schematic With TPA2005D1 Summing Two Single-Ended Inputs**

## EFFICIENCY AND THERMAL INFORMATION

The maximum ambient temperature depends on the heat-sinking ability of the PCB system. The derating factor for the 2,5-mm x 2,5-mm MicroStar Junior package is shown in the dissipation rating table. Converting this to $\theta_{JA}$:

$$\theta_{JA} = \frac{1}{\text{Derating Factor}} = \frac{1}{0.016} = 62.5°\text{C/W} \tag{17}$$

Given $\theta_{JA}$ of 62.5°C/W, the maximum allowable junction temperature of 150°C, and the maximum internal dissipation of 0.2 W (worst case 5-V supply), the maximum ambient temperature can be calculated with equation Equation 18.

$$T_A\text{Max} = T_J\text{Max} - \theta_{JA} P_{D\text{max}} = 150 - 62.5\,(0.2) = 137.5°\text{C} \tag{18}$$

Equation 18 shows that the calculated maximum ambient temperature is 137.5°C at maximum power dissipation with a 5-V supply; however, the maximum ambient temperature of the package is limited to 85°C. Because of the efficiency of the TPA2005D1, it can be operated under all conditions to an ambient temperature of 85°C. The TPA2005D1 is designed with thermal protection that turns the device off when the junction temperature surpasses 150°C to prevent damage to the IC. Also, using speakers more resistive than 8 Ω dramatically increases the thermal performance by reducing the output current and increasing the efficiency of the amplifier.


Copyright © 2005–2008, Texas Instruments Incorporated

## BOARD LAYOUT

### Component Location

Place all the external components very close to the TPA2005D1. The input resistors need to be very close to the TPA2005D1 input pins so noise does not couple on the high-impedance nodes between the input resistors and the input amplifier of the TPA2005D1. Placing the decoupling capacitor, $C_S$, close to the TPA2005D1 is important for the efficiency of the class-D amplifier. Any resistance or inductance in the trace between the device and the capacitor can cause a loss in efficiency.

### Trace Width

Make the high current traces going to pins VDD, GND, $V_{O+}$ and $V_{O-}$ of the TPA2005D1 have a minimum width of 0,7 mm. If these traces are too thin, the TPA2005D1 performance and output power will decrease. The input traces do not need to be wide, but do need to run side-by-side to enable common-mode noise cancellation.

### MicroStar Junior™ BGA Layout

Use the following MicroStar Junior BGA ball diameters:

- 0,25 mm diameter solder mask
- 0,28 mm diameter solder paste mask/stencil
- 0,38 mm diameter copper trace

Figure 32 shows how to lay out a board for the TPA2005D1 MicroStar Junior BGA.

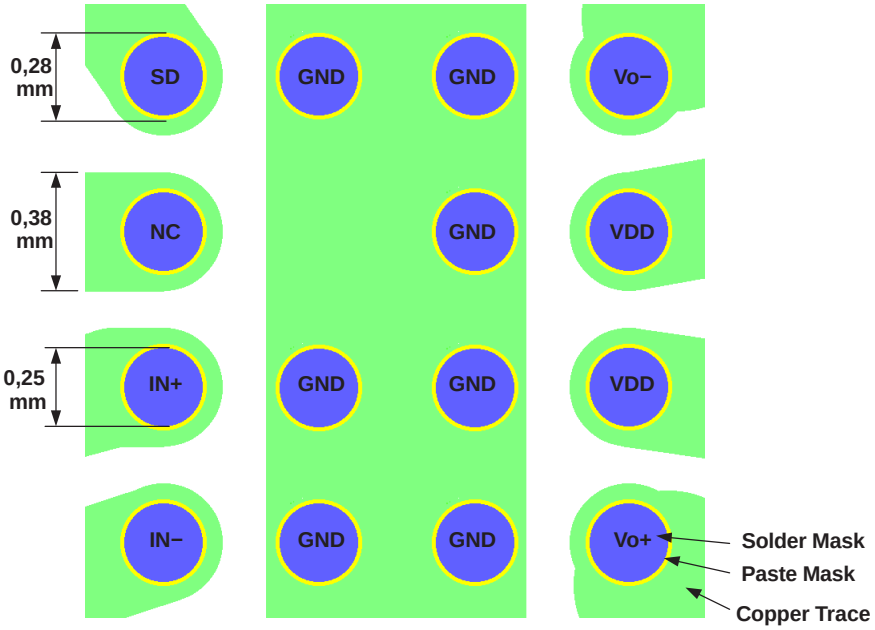


**Figure 32. TPA2005D1 MicroStar Junior BGA Board Layout (Top View)**

### 8-Pin QFN (DRB) Layout

Use the following land pattern for board layout with the 8-pin QFN (DRB) package. Note that the solder paste should use a hatch pattern to fill solder paste at 50% to ensure that there is not too much solder paste under the package.

Copyright © 2005–2008, Texas Instruments Incorporated

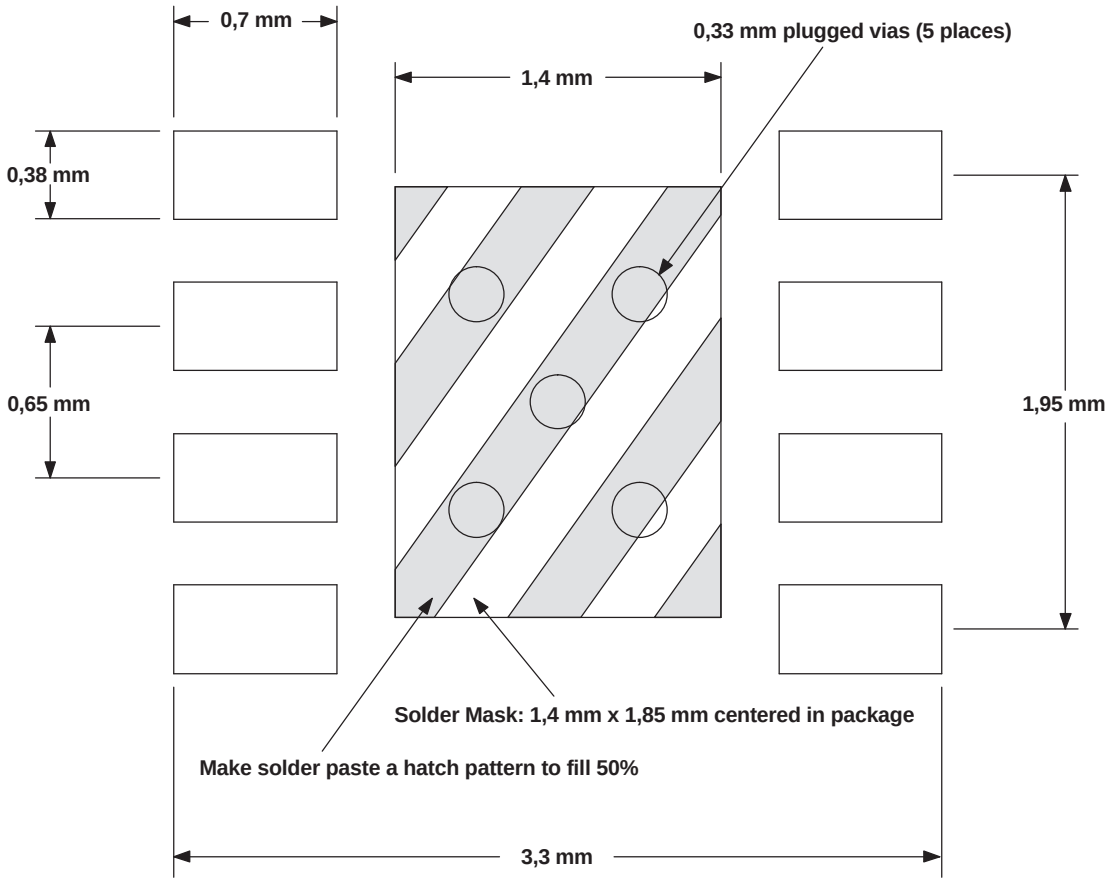


**Figure 33. TPA2005D1 8-Pin QFN (DRB) Board Layout (Top View)**

## ELIMINATING THE OUTPUT FILTER WITH THE TPA2005D1

This section focuses on why the user can eliminate the output filter with the TPA2005D1.

### Effect on Audio

The class-D amplifier outputs a pulse-width modulated (PWM) square wave, which is the sum of the switching waveform and the amplified input audio signal. The human ear acts as a band-pass filter such that only the frequencies between approximately 20 Hz and 20 kHz are passed. The switching frequency components are much greater than 20 kHz, so the only signal heard is the amplified input audio signal.

### Traditional Class-D Modulation Scheme

The traditional class-D modulation scheme, which is used in the TPA005Dxx family, has a differential output in which each output is 180 degrees out of phase and changes from ground to the supply voltage, $V_{DD}$. Therefore, the differential pre-filtered output varies between positive and negative $V_{DD}$, where filtered 50% duty cycle yields 0 V across the load. The traditional class-D modulation scheme with voltage and current waveforms is shown in Figure 34. Note that, even at an average of 0 V across the load (50% duty cycle), the current to the load is high, causing a high loss and thus causing a high supply current.


Copyright © 2005–2008, Texas Instruments Incorporated

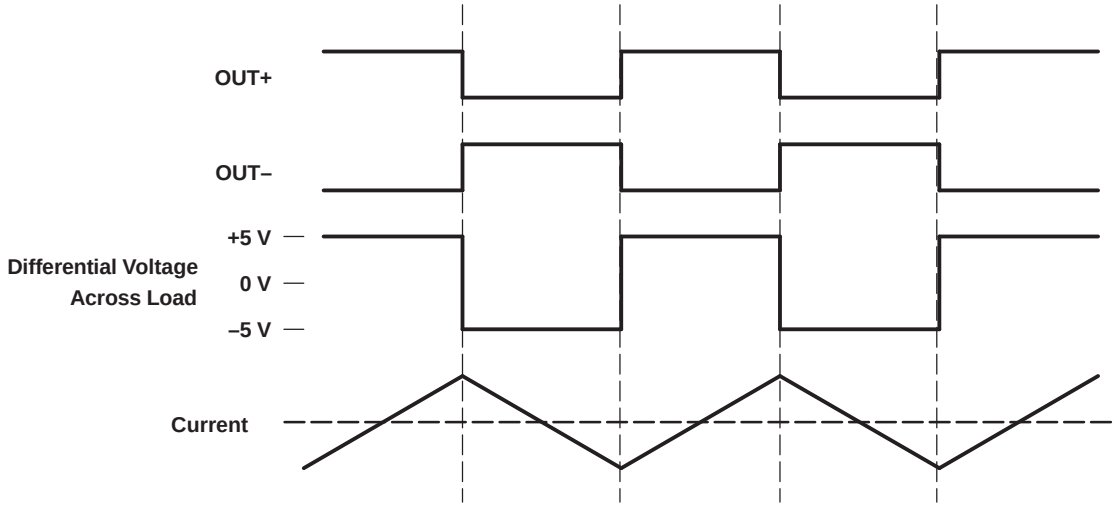


**Figure 34. Traditional Class-D Modulation Scheme Output Voltage and Current Waveforms Into an Inductive Load With No Input**

### TPA2005D1 Modulation Scheme

The TPA2005D1 uses a modulation scheme that still has each output switching from 0 to the supply voltage. However, OUT+ and OUT– are now in phase with each other, with no input. The duty cycle of OUT+ is greater than 50% and OUT– is less than 50% for positive voltages. The duty cycle of OUT+ is less than 50% and OUT– is greater than 50% for negative voltages. The voltage across the load remains at 0 V throughout most of the switching period, greatly reducing the switching current, which reduces any $I^2R$ losses in the load.

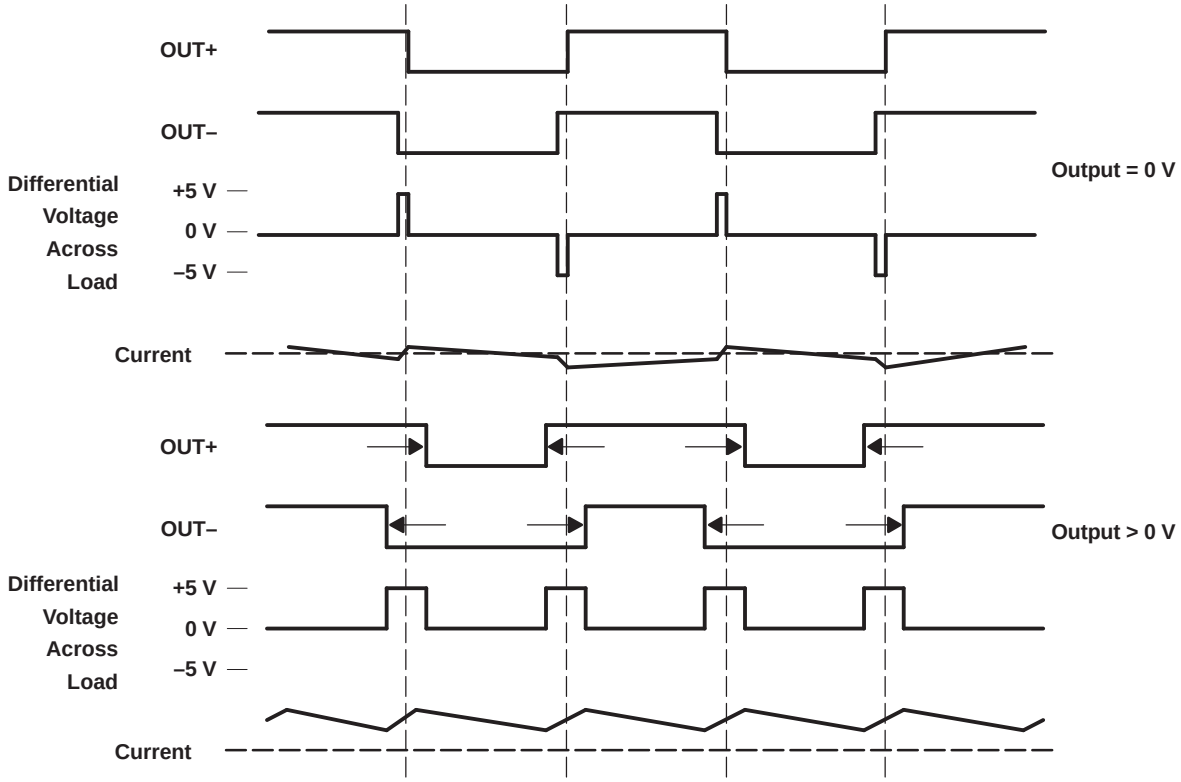


**Figure 35. The TPA2005D1 Output Voltage and Current Waveforms Into an Inductive Load**

### Efficiency: Why You Must Use a Filter With the Traditional Class-D Modulation Scheme

The main reason that the traditional class-D amplifier needs an output filter is that the switching waveform results in maximum current flow. This causes more loss in the load, which causes lower efficiency. The ripple current is large for the traditional modulation scheme because the ripple current is proportional to voltage multiplied by the time at that voltage. The differential voltage swing is $2 \times V_{DD}$, and the time at each voltage is one-half the period for the traditional modulation scheme. An ideal LC filter is needed to store the ripple current from each half-cycle for the next half-cycle, while any resistance causes power dissipation. The speaker is both resistive and reactive, whereas an LC filter is almost purely reactive.

The TPA2005D1 modulation scheme has very little loss in the load without a filter because the pulses are very short and the change in voltage is $V_{DD}$ instead of $2 \times V_{DD}$. As the output power increases, the pulses widen, making the ripple current larger. Ripple current could be filtered with an LC filter for increased efficiency, but for most applications the filter is not needed.

An LC filter with a cutoff frequency less than the class-D switching frequency allows the switching current to flow through the filter instead of the load. The filter has less resistance than the speaker, resulting in less power dissipation, which increases efficiency.

### Effects of Applying a Square Wave Into a Speaker

If the amplitude of a square wave is high enough and the frequency of the square wave is within the bandwidth of the speaker, a square wave could cause the voice coil to jump out of the air gap and/or scar the voice coil. A 250-kHz switching frequency, however, is not significant because the speaker cone movement is proportional to $1/f^2$ for frequencies beyond the audio band. Therefore, the amount of cone movement at the switching frequency is very small. However, damage could occur to the speaker if the voice coil is not designed to handle the additional power. To size the speaker for added power, the ripple current dissipated in the load must be calculated by subtracting the theoretical supplied power, $P_{SUP\ THEORETICAL}$, from the actual supply power, $P_{SUP}$, at maximum output power, $P_{OUT}$. The switching power dissipated in the speaker is the inverse of the measured efficiency, $\eta_{MEASURED}$, minus the theoretical efficiency, $\eta_{THEORETICAL}$.

$$P_{SPKR} = P_{SUP} - P_{SUP\ THEORETICAL} \text{ (at max output power)} \tag{19}$$

$$P_{SPKR} = \frac{P_{SUP}}{P_{OUT}} - \frac{P_{SUP\ THEORETICAL}}{P_{OUT}} \text{ (at max output power)} \tag{20}$$

$$P_{SPKR} = P_{OUT}\left(\frac{1}{\eta_{MEASURED}} - \frac{1}{\eta_{THEORETICAL}}\right) \text{ (at max output power)} \tag{21}$$

$$\eta THEORETICAL = \frac{R_L}{R_L + 2r_{DS(on)}} \text{ (at max output power)} \tag{22}$$

The maximum efficiency of the TPA2005D1 with a 3.6-V supply and an 8-Ω load is 86% from Equation 22. Using Equation 21 with the efficiency at maximum power (84%), we see that there is an additional 17 mW dissipated in the speaker. The added power dissipated in the speaker is not an issue as long as it is taken into account when choosing the speaker.

### When to Use an Output Filter

Design the TPA2005D1 without an output filter if the traces from amplifier to speaker are short. The TPA2005D1 passed FCC and CE radiated emissions with no shielding and with speaker trace wires 100 mm long or less. Wireless handsets and PDAs are great applications for class-D without a filter.

A ferrite bead filter often can be used if the design is failing radiated emissions without an LC filter, and the frequency-sensitive circuit is greater than 1 MHz. This is good for circuits that just have to pass FCC and CE because FCC and CE only test radiated emissions greater than 30 MHz. If choosing a ferrite bead, choose one with high impedance at high frequencies, but very low impedance at low frequencies.

Use an LC output filter if there are low-frequency (<1 MHz) EMI-sensitive circuits and/or there are long leads from amplifier to speaker.

Figure 36 and Figure 37 show typical ferrite bead and LC output filters.


Copyright © 2005–2008, Texas Instruments Incorporated

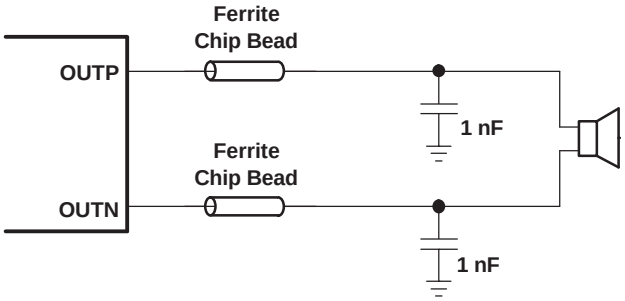


**Figure 36. Typical Ferrite Chip Bead Filter (Chip bead example: NEC/Tokin: N2012ZPS121)**

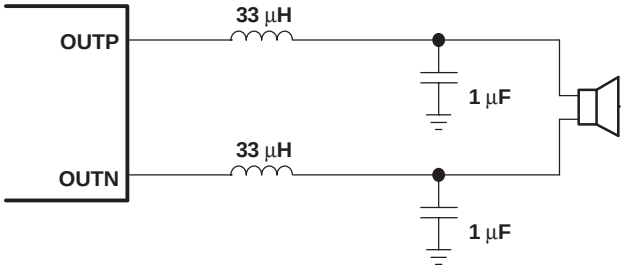


**Figure 37. Typical LC Output Filter, Cut-Off Frequency of 27 kHz**

## PACKAGING INFORMATION

| Orderable Device | Status (1) | Package Type | Package Drawing | Pins | Package Qty | Eco Plan (2) | Lead/Ball Finish | MSL Peak Temp (3) |
|---|---|---|---|---|---|---|---|---|
| TPA2005D1DGNRQ1 | ACTIVE | MSOP-Power PAD | DGN | 8 | 2500 | Green (RoHS & no Sb/Br) | CU NIPDAU | Level-2-260C-1 YEAR |
| TPA2005D1DRBQ1 | ACTIVE | SON | DRB | 8 | 3000 | Green (RoHS & no Sb/Br) | CU NIPDAU | Level-2-260C-1 YEAR |

(1) The marketing status values are defined as follows:
**ACTIVE:** Product device recommended for new designs.
**LIFEBUY:** TI has announced that the device will be discontinued, and a lifetime-buy period is in effect.
**NRND:** Not recommended for new designs. Device is in production to support existing customers, but TI does not recommend using this part in a new design.
**PREVIEW:** Device has been announced but is not in production. Samples may or may not be available.
**OBSOLETE:** TI has discontinued the production of the device.

(2) Eco Plan - The planned eco-friendly classification: Pb-Free (RoHS), Pb-Free (RoHS Exempt), or Green (RoHS & no Sb/Br) - please check http://www.ti.com/productcontent for the latest availability information and additional product content details.
**TBD:** The Pb-Free/Green conversion plan has not been defined.
**Pb-Free (RoHS):** TI's terms "Lead-Free" or "Pb-Free" mean semiconductor products that are compatible with the current RoHS requirements for all 6 substances, including the requirement that lead not exceed 0.1% by weight in homogeneous materials. Where designed to be soldered at high temperatures, TI Pb-Free products are suitable for use in specified lead-free processes.
**Pb-Free (RoHS Exempt):** This component has a RoHS exemption for either 1) lead-based flip-chip solder bumps used between the die and package, or 2) lead-based die adhesive used between the die and leadframe. The component is otherwise considered Pb-Free (RoHS compatible) as defined above.
**Green (RoHS & no Sb/Br):** TI defines "Green" to mean Pb-Free (RoHS compatible), and free of Bromine (Br) and Antimony (Sb) based flame retardants (Br or Sb do not exceed 0.1% by weight in homogeneous material)

(3) MSL, Peak Temp. -- The Moisture Sensitivity Level rating according to the JEDEC industry standard classifications, and peak solder temperature.

**Important Information and Disclaimer:**The information provided on this page represents TI's knowledge and belief as of the date that it is provided. TI bases its knowledge and belief on information provided by third parties, and makes no representation or warranty as to the accuracy of such information. Efforts are underway to better integrate information from third parties. TI has taken and continues to take reasonable steps to provide representative and accurate information but may not have conducted destructive testing or chemical analysis on incoming materials and chemicals. TI and TI suppliers consider certain information to be proprietary, and thus CAS numbers and other limited information may not be available for release.

In no event shall TI's liability arising out of such information exceed the total purchase price of the TI part(s) at issue in this document sold by TI to Customer on an annual basis.

**OTHER QUALIFIED VERSIONS OF TPA2005D1-Q1 :**
- Catalog: TPA2005D1

NOTE: Qualified Version Definitions:
- Catalog - TI's standard catalog product

## TAPE AND REEL INFORMATION

**REEL DIMENSIONS**

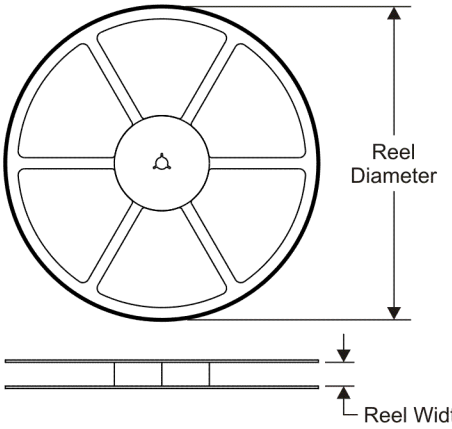


**TAPE DIMENSIONS**

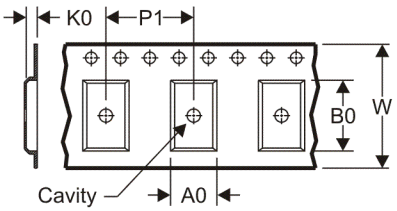


| | |
|---|---|
| A0 | Dimension designed to accommodate the component width |
| B0 | Dimension designed to accommodate the component length |
| K0 | Dimension designed to accommodate the component thickness |
| W | Overall width of the carrier tape |
| P1 | Pitch between successive cavity centers |

**QUADRANT ASSIGNMENTS FOR PIN 1 ORIENTATION IN TAPE**

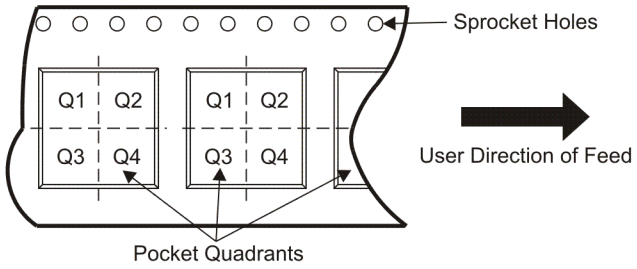


*All dimensions are nominal

| Device | Package Type | Package Drawing | Pins | SPQ | Reel Diameter (mm) | Reel Width W1 (mm) | A0 (mm) | B0 (mm) | K0 (mm) | P1 (mm) | W (mm) | Pin1 Quadrant |
|---|---|---|---|---|---|---|---|---|---|---|---|---|
| TPA2005D1DGNRQ1 | MSOP-Power PAD | DGN | 8 | 2500 | 330.0 | 12.4 | 5.3 | 3.4 | 1.4 | 8.0 | 12.0 | Q1 |

TAPE AND REEL BOX DIMENSIONS

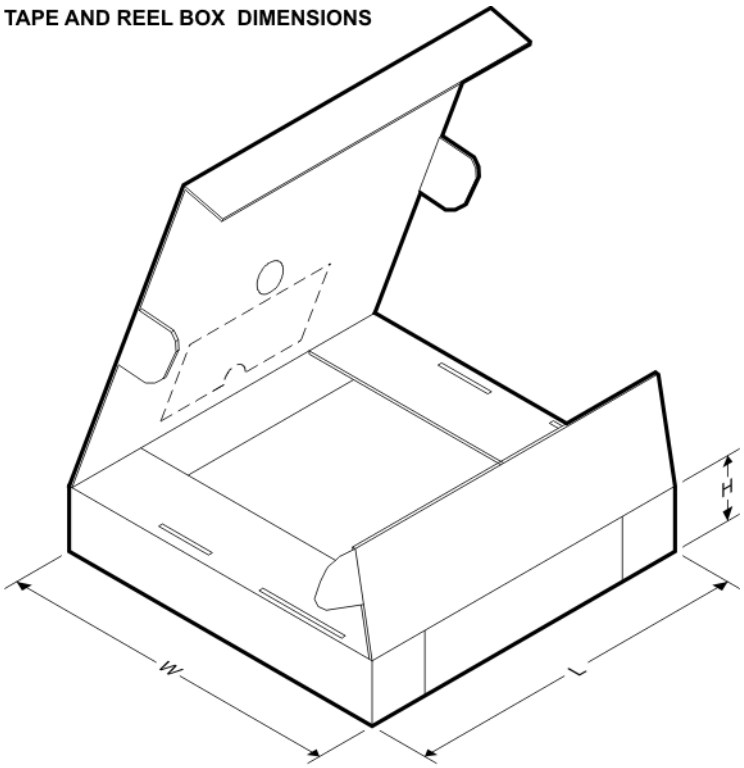


*All dimensions are nominal

| Device | Package Type | Package Drawing | Pins | SPQ | Length (mm) | Width (mm) | Height (mm) |
|---|---|---|---|---|---|---|---|
| TPA2005D1DGNRQ1 | MSOP-PowerPAD | DGN | 8 | 2500 | 346.0 | 346.0 | 29.0 |

DRB (S–PDSO–N8) PLASTIC SMALL OUTLINE

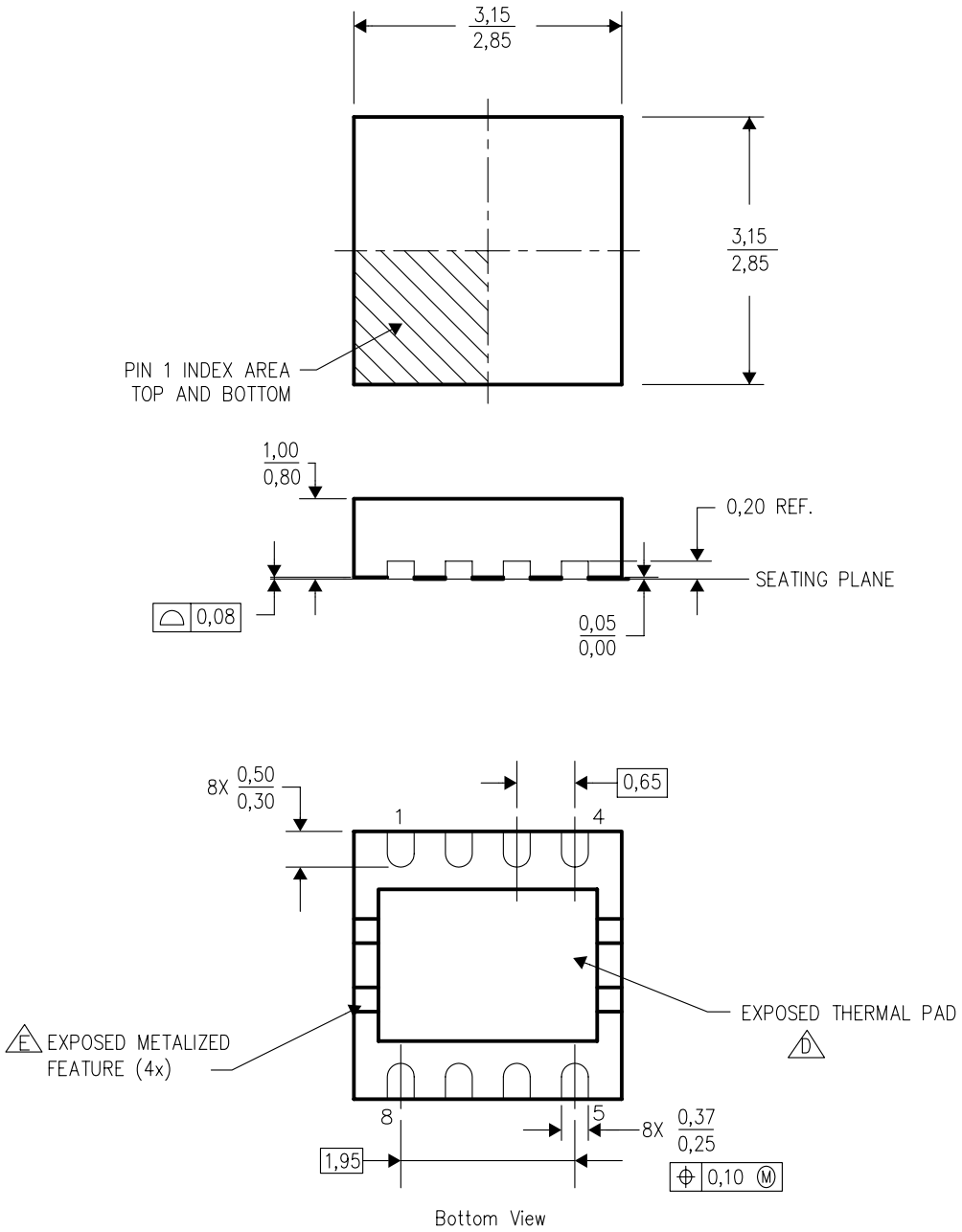


4203482/G 11/04

NOTES:
A. All linear dimensions are in millimeters. Dimensioning and tolerancing per ASME Y14.5M–1994.
B. This drawing is subject to change without notice.
C. Small Outline No–Lead (SON) package configuration.
D. The package thermal pad must be soldered to the board for thermal and mechanical performance. See the Product Data Sheet for details regarding the exposed thermal pad dimensions.
E. Metalized features are supplier options and may not be on the package.

# THERMAL PAD MECHANICAL DATA

## DRB (S–PVSON–N8)

### THERMAL INFORMATION

This package incorporates an exposed thermal pad that is designed to be attached directly to an external heatsink. The thermal pad must be soldered directly to the printed circuit board (PCB). After soldering, the PCB can be used as a heatsink. In addition, through the use of thermal vias, the thermal pad can be attached directly to the appropriate copper plane shown in the electrical schematic for the device, or alternatively, can be attached to a special heatsink structure designed into the PCB. This design optimizes the heat transfer from the integrated circuit (IC).

For information on the Quad Flatpack No–Lead (QFN) package and its advantages, refer to Application Report, QFN/SON PCB Attachment, Texas Instruments Literature No. SLUA271. This document is available at www.ti.com.

The exposed thermal pad dimensions for this package are shown in the following illustration.

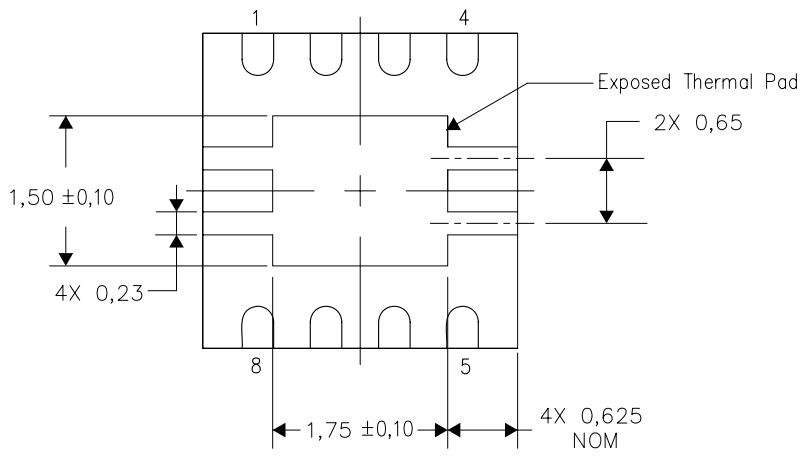


Bottom View

NOTE: All linear dimensions are in millimeters

Exposed Thermal Pad Dimensions

DRB (S–PVSON–N8)

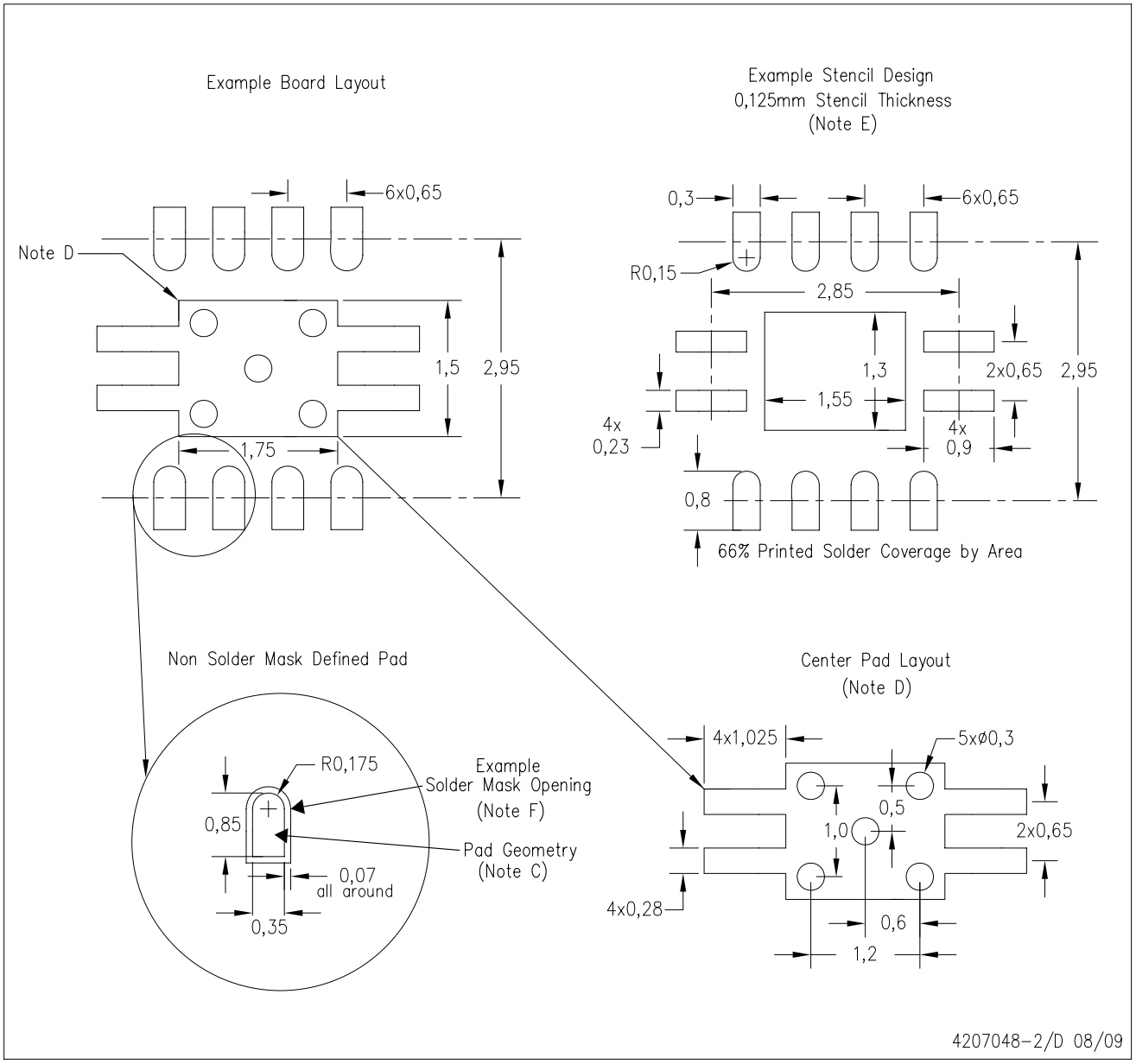


NOTES:
A. All linear dimensions are in millimeters.
B. This drawing is subject to change without notice.
C. Publication IPC–7351 is recommended for alternate designs.
D. This package is designed to be soldered to a thermal pad on the board. Refer to Application Note, QFN Packages, Texas Instruments Literature No. SCBA017, SLUA271, and also the Product Data Sheets for specific thermal information, via requirements, and recommended board layout. These documents are available at www.ti.com <http://www.ti.com>.
E. Laser cutting apertures with trapezoidal walls and also rounding corners will offer better paste release. Customers should contact their board assembly site for stencil design recommendations. Refer to IPC 7525 for stencil design considerations.
F. Customers should contact their board fabrication site for solder mask tolerances.

DGN (S–PDSO–G8) PowerPAD™ PLASTIC SMALL–OUTLINE PACKAGE

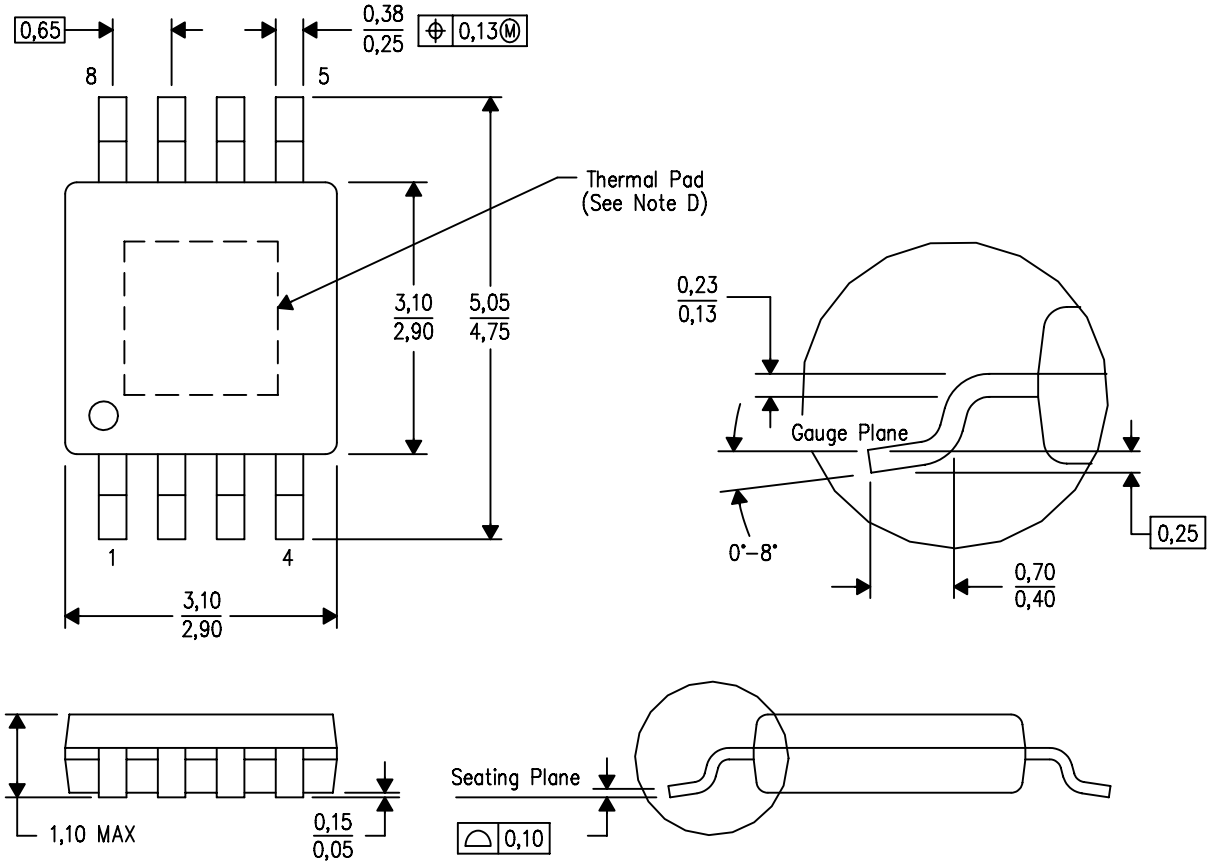


NOTES:
A. All linear dimensions are in millimeters.
B. This drawing is subject to change without notice.
C. Body dimensions do not include mold flash or protrusion.
D. This package is designed to be soldered to a thermal pad on the board. Refer to Technical Brief, PowerPad Thermally Enhanced Package, Texas Instruments Literature No. SLMA002 for information regarding recommended board layout. This document is available at www.ti.com <http://www.ti.com>.
E. Falls within JEDEC MO–187 variation AA–T

**PowerPAD is a trademark of Texas Instruments.**

# THERMAL PAD MECHANICAL DATA

DGN (S–PDSO–G8)

## THERMAL INFORMATION

This PowerPAD™ package incorporates an exposed thermal pad that is designed to be attached to a printed circuit board (PCB). The thermal pad must be soldered directly to the PCB. After soldering, the PCB can be used as a heatsink. In addition, through the use of thermal vias, the thermal pad can be attached directly to the appropriate copper plane shown in the electrical schematic for the device, or alternatively, can be attached to a special heatsink structure designed into the PCB. This design optimizes the heat transfer from the integrated circuit (IC).

For additional information on the PowerPAD package and how to take advantage of its heat dissipating abilities, refer to Technical Brief, PowerPAD Thermally Enhanced Package, Texas Instruments Literature No. SLMA002 and Application Brief, PowerPAD Made Easy, Texas Instruments Literature No. SLMA004. Both documents are available at www.ti.com.

The exposed thermal pad dimensions for this package are shown in the following illustration.

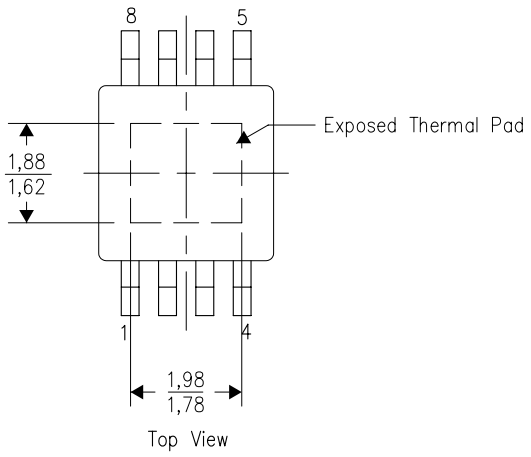


NOTE: All linear dimensions are in millimeters

Exposed Thermal Pad Dimensions

## DGN (R–PDSO–G8) PowerPAD™

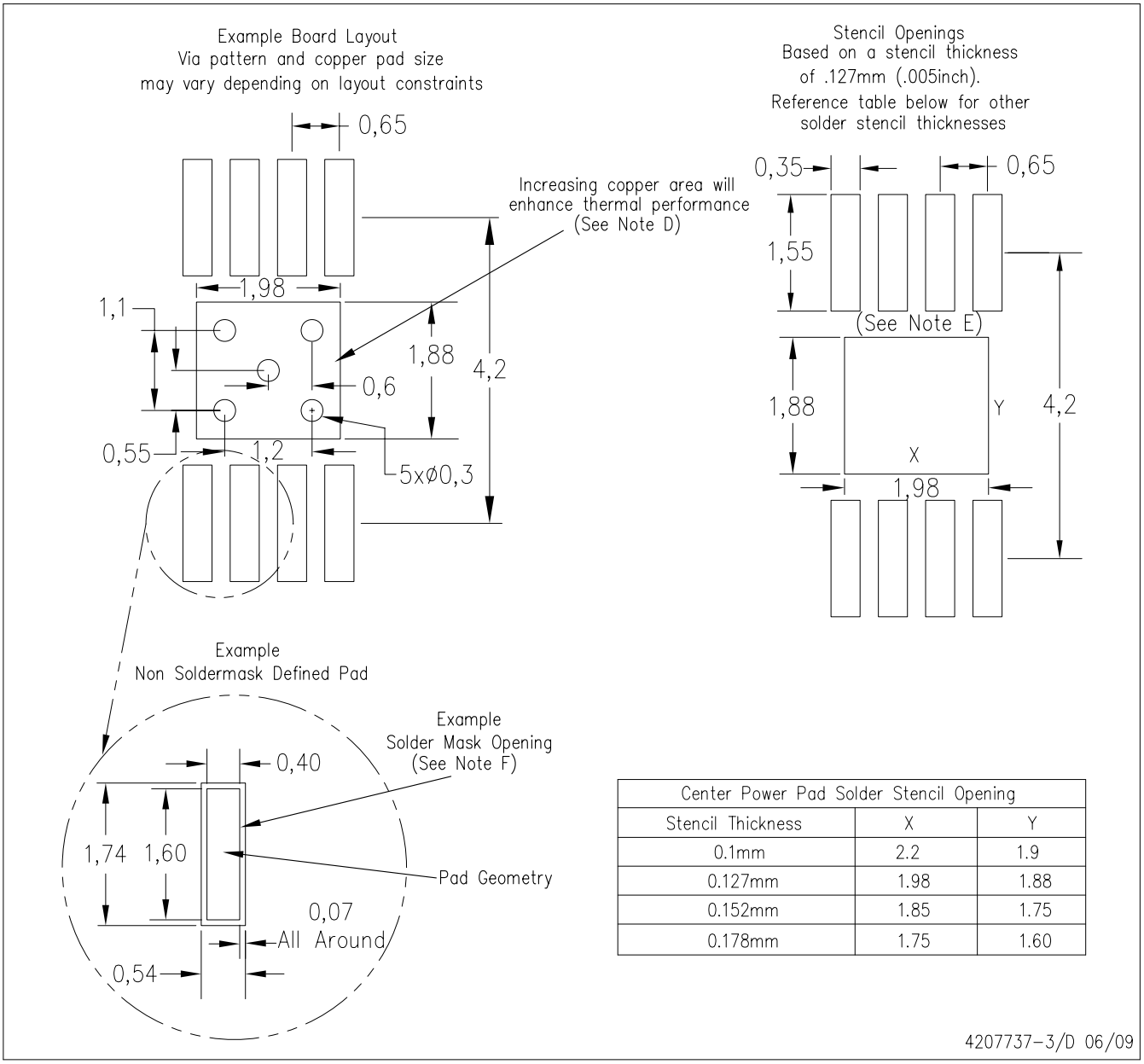


| Center Power Pad Solder Stencil Opening | | |
|---|---|---|
| Stencil Thickness | X | Y |
| 0.1mm | 2.2 | 1.9 |
| 0.127mm | 1.98 | 1.88 |
| 0.152mm | 1.85 | 1.75 |
| 0.178mm | 1.75 | 1.60 |

4207737–3/D 06/09

NOTES:
A. All linear dimensions are in millimeters.
B. This drawing is subject to change without notice.
C. Customers should place a note on the circuit board fabrication drawing not to alter the center solder mask defined pad.
D. This package is designed to be soldered to a thermal pad on the board. Refer to Technical Brief, PowerPad Thermally Enhanced Package, Texas Instruments Literature No. SLMA002, SLMA004, and also the Product Data Sheets for specific thermal information, via requirements, and recommended board layout. These documents are available at www.ti.com <http://www.ti.com>. Publication IPC–7351 is recommended for alternate designs.
E. Laser cutting apertures with trapezoidal walls and also rounding corners will offer better paste release. Customers should contact their board assembly site for stencil design recommendations. Example stencil design based on a 50% volumetric metal load solder paste. Refer to IPC–7525 for other stencil recommendations.
F. Customers should contact their board fabrication site for solder mask tolerances between and around signal pads.

## IMPORTANT NOTICE

Texas Instruments Incorporated and its subsidiaries (TI) reserve the right to make corrections, modifications, enhancements, improvements, and other changes to its products and services at any time and to discontinue any product or service without notice. Customers should obtain the latest relevant information before placing orders and should verify that such information is current and complete. All products are sold subject to TI's terms and conditions of sale supplied at the time of order acknowledgment.

TI warrants performance of its hardware products to the specifications applicable at the time of sale in accordance with TI's standard warranty. Testing and other quality control techniques are used to the extent TI deems necessary to support this warranty. Except where mandated by government requirements, testing of all parameters of each product is not necessarily performed.

TI assumes no liability for applications assistance or customer product design. Customers are responsible for their products and applications using TI components. To minimize the risks associated with customer products and applications, customers should provide adequate design and operating safeguards.

TI does not warrant or represent that any license, either express or implied, is granted under any TI patent right, copyright, mask work right, or other TI intellectual property right relating to any combination, machine, or process in which TI products or services are used. Information published by TI regarding third-party products or services does not constitute a license from TI to use such products or services or a warranty or endorsement thereof. Use of such information may require a license from a third party under the patents or other intellectual property of the third party, or a license from TI under the patents or other intellectual property of TI.

Reproduction of TI information in TI data books or data sheets is permissible only if reproduction is without alteration and is accompanied by all associated warranties, conditions, limitations, and notices. Reproduction of this information with alteration is an unfair and deceptive business practice. TI is not responsible or liable for such altered documentation. Information of third parties may be subject to additional restrictions.

Resale of TI products or services with statements different from or beyond the parameters stated by TI for that product or service voids all express and any implied warranties for the associated TI product or service and is an unfair and deceptive business practice. TI is not responsible or liable for any such statements.

TI products are not authorized for use in safety-critical applications (such as life support) where a failure of the TI product would reasonably be expected to cause severe personal injury or death, unless officers of the parties have executed an agreement specifically governing such use. Buyers represent that they have all necessary expertise in the safety and regulatory ramifications of their applications, and acknowledge and agree that they are solely responsible for all legal, regulatory and safety-related requirements concerning their products and any use of TI products in such safety-critical applications, notwithstanding any applications-related information or support that may be provided by TI. Further, Buyers must fully indemnify TI and its representatives against any damages arising out of the use of TI products in such safety-critical applications.

TI products are neither designed nor intended for use in military/aerospace applications or environments unless the TI products are specifically designated by TI as military-grade or "enhanced plastic." Only products designated by TI as military-grade meet military specifications. Buyers acknowledge and agree that any such use of TI products which TI has not designated as military-grade is solely at the Buyer's risk, and that they are solely responsible for compliance with all legal and regulatory requirements in connection with such use.

TI products are neither designed nor intended for use in automotive applications or environments unless the specific TI products are designated by TI as compliant with ISO/TS 16949 requirements. Buyers acknowledge and agree that, if they use any non-designated products in automotive applications, TI will not be responsible for any failure to meet such requirements.

Following are URLs where you can obtain information on other Texas Instruments products and application solutions:

| **Products** | | **Applications** | |
|---|---|---|---|
| Amplifiers | amplifier.ti.com | Audio | www.ti.com/audio |
| Data Converters | dataconverter.ti.com | Automotive | www.ti.com/automotive |
| DLP® Products | www.dlp.com | Broadband | www.ti.com/broadband |
| DSP | dsp.ti.com | Digital Control | www.ti.com/digitalcontrol |
| Clocks and Timers | www.ti.com/clocks | Medical | www.ti.com/medical |
| Interface | interface.ti.com | Military | www.ti.com/military |
| Logic | logic.ti.com | Optical Networking | www.ti.com/opticalnetwork |
| Power Mgmt | power.ti.com | Security | www.ti.com/security |
| Microcontrollers | microcontroller.ti.com | Telephony | www.ti.com/telephony |
| RFID | www.ti-rfid.com | Video & Imaging | www.ti.com/video |
| RF/IF and ZigBee® Solutions | www.ti.com/lprf | Wireless | www.ti.com/wireless |

Mailing Address: Texas Instruments, Post Office Box 655303, Dallas, Texas 75265
Copyright © 2009, Texas Instruments Incorporated