- **Operate From 1.65 V to 3.6 V**
- **Inputs Accept Voltages to 5.5 V**
- **Specified From −40°C to 85°C, −40°C to 125°C, and −55°C to 125°C**
- **Max t_{pd} of 7 ns at 3.3 V**
- **Typical V_{OLP} (Output Ground Bounce) <0.8 V at V_{CC} = 3.3 V, T_A = 25°C**
- **Typical V_{OHV} (Output V_{OH} Undershoot) >2 V at V_{CC} = 3.3 V, T_A = 25°C**
- **Support Mixed-Mode Signal Operation on All Ports (5-V Input/Output Voltage With 3.3-V V_{CC})**
- **I_{off} Supports Partial-Power-Down Mode Operation**
- **Latch-Up Performance Exceeds 250 mA Per JESD 17**
- **ESD Protection Exceeds JESD 22**
  - **2000-V Human-Body Model (A114-A)**
  - **200-V Machine Model (A115-A)**
  - **1000-V Charged-Device Model (C101)**

SN54LVC574A . . . J OR W PACKAGE
SN74LVC574A . . . DB, DGV, DW, N, NS, OR PW PACKAGE
(TOP VIEW)

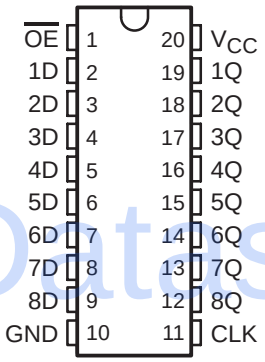

SN74LVC574A . . . RGY PACKAGE
(TOP VIEW)

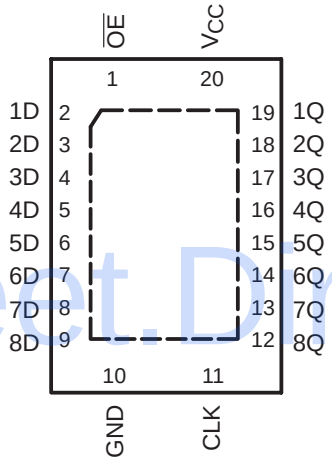

SN54LVC574A . . . FK PACKAGE
(TOP VIEW)

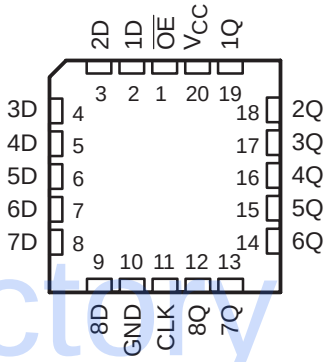

Datasheet Directory

description/ordering information

The SN54LVC574A octal edge-triggered D-type flip-flop is designed for 2.7-V to 3.6-V V_{CC} operation, and the SN74LVC574A octal edge-triggered D-type flip-flop is designed for 1.65-V to 3.6-V V_{CC} operation.

These devices feature 3-state outputs designed specifically for driving highly capacitive or relatively low-impedance loads. They are particularly suitable for implementing buffer registers, I/O ports, bidirectional bus drivers, and working registers.

On the positive transition of the clock (CLK) input, the Q outputs are set to the logic levels at the data (D) inputs.

A buffered output-enable ($\overline{OE}$) input can be used to place the eight outputs in either a normal logic state (high or low logic levels) or the high-impedance state. In the high-impedance state, the outputs neither load nor drive the bus lines significantly. The high-impedance state and increased drive provide the capability to drive bus lines without interface or pullup components.

$\overline{OE}$ does not affect the internal operations of the flip-flops. Old data can be retained or new data can be entered while the outputs are in the high-impedance state.

These devices are fully specified for partial-power-down applications using I_{off}. The I_{off} circuitry disables the outputs, preventing damaging current backflow through the device when it is powered down.

Please be aware that an important notice concerning availability, standard warranty, and use in critical applications of Texas Instruments semiconductor products and disclaimers thereto appears at the end of this data sheet.

PRODUCTION DATA information is current as of publication date. Products conform to specifications per the terms of Texas Instruments standard warranty. Production processing does not necessarily include testing of all parameters.

Copyright © 2005, Texas Instruments Incorporated
On products compliant to MIL-PRF-38535, all parameters are tested unless otherwise noted. On all other products, production processing does not necessarily include testing of all parameters.

description/ordering information (continued)

To ensure the high-impedance state during power up or power down, $\overline{OE}$ should be tied to V_{CC} through a pullup resistor; the minimum value of the resistor is determined by the current-sinking capability of the driver.

Inputs can be driven from either 3.3-V or 5-V devices. This feature allows the use of these devices as translators in a mixed 3.3-V/5-V system environment.

ORDERING INFORMATION

T_A	PACKAGE†		ORDERABLE PART NUMBER	TOP-SIDE MARKING
−40°C to 85°C	QFN − RGY	Reel of 1000	SN74LVC574ARGYR	LC574A
	VFBGA − GQN	Reel of 1000	SN74LVC574AGQNR	LC574A
	VFBGA − ZQN (Pb-free)		SN74LVC574AZQNR	
−40°C to 125°C	PDIP − N	Tube of 20	SN74LVC574AN	SN74LVC574AN
	SOIC − DW	Tube of 25	SN74LVC574ADW	LVC574A
		Reel of 2000	SN74LVC574ADWR	
	SOP − NS	Reel of 2000	SN74LVC574ANSR	LVC574A
	SSOP − DB	Reel of 2000	SN74LVC574ADBR	LC574A
	TSSOP − PW	Tube of 70	SN74LVC574APW	LC574A
		Reel of 2000	SN74LVC574APWR	
		Reel of 250	SN74LVC574APWT	
	TVSOP − DGV	Reel of 2000	SN74LVC574ADGVR	LC574A
−55°C to 125°C	CDIP − J	Tube of 20	SNJ54LVC574AJ	SNJ54LVC574AJ
	CFP − W	Tube of 85	SNJ54LVC574AW	SNJ54LVC574AW
	LCCC − FK	Tube of 55	SNJ54LVC574AFK	SNJ54LVC574AFK

† Package drawings, standard packing quantities, thermal data, symbolization, and PCB design guidelines are available at www.ti.com/sc/package.

GQN OR ZQN PACKAGE
(TOP VIEW)

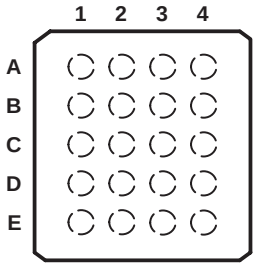

terminal assignments

	1	2	3	4
A	1D	$\overline{OE}$	V_{CC}	1Q
B	3D	3Q	2D	2Q
C	5D	4D	5Q	4Q
D	7D	7Q	6D	6Q
E	GND	8D	CLK	8Q

FUNCTION TABLE
(each flip-flop)

INPUTS			OUTPUT
$\overline{OE}$	CLK	D	Q
L	↑	H	H
L	↑	L	L
L	L	X	Q_0
H	X	X	Z

logic diagram (positive logic)

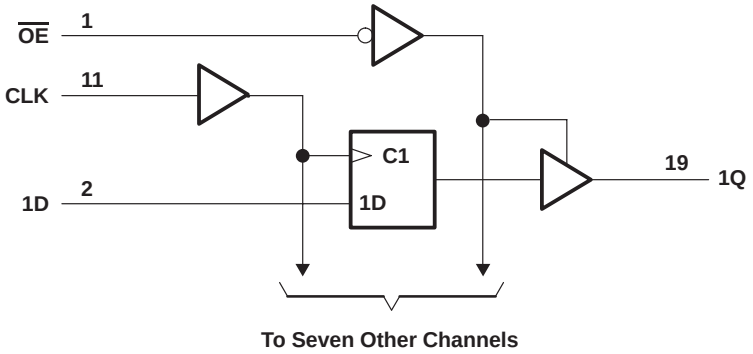

Pin numbers shown are for the DB, DGV, DW, FK, J, N, NS, PW, RGY, and W packages.

absolute maximum ratings over operating free-air temperature range (unless otherwise noted)†

Supply voltage range, V_{CC}	−0.5 V to 6.5 V
Input voltage range, V_I (see Note 1)	−0.5 V to 6.5 V
Voltage range applied to any output in the high-impedance or power-off state, V_O (see Note 1)	−0.5 V to 6.5 V
Voltage range applied to any output in the high or low state, V_O (see Notes 1 and 2)	−0.5 V to V_{CC} + 0.5 V
Input clamp current, I_{IK} (V_I < 0)	−50 mA
Output clamp current, I_{OK} (V_O < 0)	−50 mA
Continuous output current, I_O	±50 mA
Continuous current through V_{CC} or GND	±100 mA
Package thermal impedance, θ_{JA} (see Note 3): DB package	70°C/W
(see Note 3): DGV package	92°C/W
(see Note 3): DW package	58°C/W
(see Note 3): GQN/ZQN package	78°C/W
(see Note 3): N package	69°C/W
(see Note 3): NS package	60°C/W
(see Note 3): PW package	83°C/W
(see Note 4): RGY package	37°C/W
Storage temperature range, T_{stg}	−65°C to 150°C
Power dissipation, P_{tot} (T_A = −40°C to 125°C) (see Notes 5 and 6)	500 mW

† Stresses beyond those listed under “absolute maximum ratings” may cause permanent damage to the device. These are stress ratings only, and functional operation of the device at these or any other conditions beyond those indicated under “recommended operating conditions” is not implied. Exposure to absolute-maximum-rated conditions for extended periods may affect device reliability.

NOTES:
1. The input negative-voltage and output voltage ratings may be exceeded if the input and output current ratings are observed.
2. The value of V_{CC} is provided in the recommended operating conditions table.
3. The package thermal impedance is calculated in accordance with JESD 51-7.
4. The package thermal impedance is calculated in accordance with JESD 51-5.
5. For the DW package: above 70°C the value of P_{tot} derates linearly with 8 mW/K.
6. For the DB, DGV, N, NS, and PW packages: above 60°C the value of P_{tot} derates linearly with 5.5 mW/K.

recommended operating conditions (see Note 7)

			SN54LVC574A −55 TO 125°C MIN	SN54LVC574A −55 TO 125°C MAX	UNIT
V_{CC}	Supply voltage	Operating	2	3.6	V
		Data retention only	1.5		
V_{IH}	High-level input voltage	V_{CC} = 2.7 V to 3.6 V	2		V
V_{IL}	Low-level input voltage	V_{CC} = 2.7 V to 3.6 V		0.8	V
V_I	Input voltage		0	5.5	V
V_O	Output voltage	High or low state	0	V_{CC}	V
		3−state	0	5.5	
I_{OH}	High-level output current	V_{CC} = 2.7 V		−12	mA
		V_{CC} = 3 V		−24	
I_{OL}	Low-level output current	V_{CC} = 2.7 V		12	mA
		V_{CC} = 3 V		24	
$\Delta t/\Delta v$	Input transition rise or fall rate			6	ns/V

NOTE 7: All unused inputs of the device must be held at V_{CC} or GND to ensure proper device operation. Refer to the TI application report, *Implications of Slow or Floating CMOS Inputs*, literature number SCBA004.

recommended operating conditions (see Note 7)

			SN74LVC574A T_A = 25°C MIN	SN74LVC574A T_A = 25°C MAX	SN74LVC574A −40 TO 85°C MIN	SN74LVC574A −40 TO 85°C MAX	SN74LVC574A −40 TO 125°C MIN	SN74LVC574A −40 TO 125°C MAX	UNIT
V_{CC}	Supply voltage	Operating	1.65	3.6	1.65	3.6	1.65	3.6	V
		Data retention only	1.5		1.5		1.5		
V_{IH}	High-level input voltage	V_{CC} = 1.65 V to 1.95 V	$0.65 \times V_{CC}$		$0.65 \times V_{CC}$		$0.65 \times V_{CC}$		V
		V_{CC} = 2.3 V to 2.7 V	1.7		1.7		1.7		
		V_{CC} = 2.7 V to 3.6 V	2		2		2		
V_{IL}	Low-level input voltage	V_{CC} = 1.65 V to 1.95 V		$0.35 \times V_{CC}$		$0.35 \times V_{CC}$		$0.35 \times V_{CC}$	V
		V_{CC} = 2.3 V to 2.7 V		0.7		0.7		0.7	
		V_{CC} = 2.7 V to 3.6 V		0.8		0.8		0.8	
V_I	Input voltage		0	5.5	0	5.5	0	5.5	V
V_O	Output voltage	High or low state	0	V_{CC}	0	V_{CC}	0	V_{CC}	V
		3−state	0	5.5	0	5.5	0	5.5	
I_{OH}	High-level output current	V_{CC} = 1.65 V		−4		−4		−4	mA
		V_{CC} = 2.3 V		−8		−8		−8	
		V_{CC} = 2.7 V		−12		−12		−12	
		V_{CC} = 3 V		−24		−24		−24	
I_{OL}	Low-level output current	V_{CC} = 1.65 V		4		4		4	mA
		V_{CC} = 2.3 V		8		8		8	
		V_{CC} = 2.7 V		12		12		12	
		V_{CC} = 3 V		24		24		24	
$\Delta t/\Delta v$	Input transition rise or fall rate			6		6		6	ns/V

NOTE 7: All unused inputs of the device must be held at V_{CC} or GND to ensure proper device operation. Refer to the TI application report, *Implications of Slow or Floating CMOS Inputs*, literature number SCBA004.

electrical characteristics over recommended operating free-air temperature range (unless otherwise noted)

PARAMETER	TEST CONDITIONS		V_{CC}	SN54LVC574A −55 TO 125°C MIN	TYP†	MAX	UNIT
V_{OH}	I_{OH} = −100 µA		2.7 V to 3.6 V	V_{CC} − 0.2			V
	I_{OH} = −12 mA		2.7 V	2.2			
			3 V	2.4			
	I_{OH} = −24 mA		3 V	2.2			
V_{OL}	I_{OL} = 100 µA		2.7 V to 3.6 V			0.2	V
	I_{OL} = 12 mA		2.7 V			0.4	
	I_{OL} = 24 mA		3 V			0.55	
I_I	V_I = 5.5 V or GND		3.6 V			±5	µA
I_{OZ}	V_O = 0 to 5.5 V		3.6 V			±15	µA
I_{CC}	$V_I = V_{CC}$ or GND	I_O = 0	3.6 V			10	µA
	3.6 V ≤ V_I ≤ 5.5 V‡					10	
ΔI_{CC}	One input at V_{CC} − 0.6 V, Other inputs at V_{CC} or GND		2.7 V to 3.6 V			500	µA
C_i	$V_I = V_{CC}$ or GND		3.3 V		4		pF
C_o	$V_O = V_{CC}$ or GND		3.3 V		5.5		pF

† T_A = 25°C
‡ This applies in the disabled state only.

electrical characteristics over recommended operating free-air temperature range (unless otherwise noted)

PARAMETER	TEST CONDITIONS		V_{CC}	SN74LVC574A							UNIT
				T_A = 25°C			−40 TO 85°C		−40 TO 125°C		
				MIN	TYP	MAX	MIN	MAX	MIN	MAX	
V_{OH}	I_{OH} = −100 µA		1.65 V to 3.6 V	V_{CC} − 0.2			V_{CC} − 0.2		V_{CC} − 0.2		V
	I_{OH} = −4 mA		1.65 V	1.29			1.2		1.2		
	I_{OH} = −8 mA		2.3 V	1.9			1.7		1.7		
	I_{OH} = −12 mA		2.7 V	2.2			2.2		2.2		
			3 V	2.4			2.4		2.4		
	I_{OH} = −24 mA		3 V	2.3			2.2		2.2		
V_{OL}	I_{OL} = 100 µA		1.65 V to 3.6 V			0.1		0.2		0.2	V
	I_{OL} = 4 mA		1.65 V			0.24		0.45		0.45	
	I_{OL} = 8 mA		2.3 V			0.3		0.7		0.7	
	I_{OL} = 12 mA		2.7 V			0.4		0.4		0.4	
	I_{OL} = 24 mA		3 V			0.55		0.55		0.55	
I_I	V_I = 5.5 V or GND		3.6 V			±1		±5		±5	µA
I_{off}	V_I or V_O = 5.5 V		0			±4		±10		±10	µA
I_{OZ}	V_I = 0 to 5.5 V		3.6 V			±1		±10		±10	µA
I_{CC}	V_I = V_{CC} or GND	I_O = 0	3.6 V			1.5		10		10	µA
	3.6 V ≤ V_I ≤ 5.5 V†					1.5		10		10	
ΔI_{CC}	One input at V_{CC} − 0.6 V, Other inputs at V_{CC} or GND		2.7 V to 3.6 V			500		500		500	µA
C_i	V_I = V_{CC} or GND		3.3 V		4						pF
C_o	V_O = V_{CC} or GND		3.3 V		5.5						pF

† This applies in the disabled state only.

timing requirements over recommended operating free-air temperature range (unless otherwise noted) (see Figure 1)

		V_{CC}	SN54LVC574A		UNIT
			−55 TO 125°C		
			MIN	MAX	
f_{clock}	Clock frequency	2.7 V		150	MHz
		3.3 V ± 0.3 V		150	
t_w	Pulse duration, CLK high or low	2.7 V	3.3		ns
		3.3 V ± 0.3 V	3.3		
t_{su}	Setup time, data before CLK↑	2.7 V	2		ns
		3.3 V ± 0.3 V	2		
t_h	Hold time, data after CLK↑	2.7 V	2		ns
		3.3 V ± 0.3 V	2		

switching characteristics over recommended operating free-air temperature range (unless otherwise noted) (see Figure 1)

PARAMETER	FROM (INPUT)	TO (OUTPUT)	V_{CC}	SN54LVC574A −55 TO 125°C MIN	SN54LVC574A −55 TO 125°C MAX	UNIT
f_{max}			2.7 V	150		MHz
			3.3 V ± 0.3 V	150		
t_{pd}	CLK	Q	2.7 V		8	ns
			3.3 V ± 0.3 V	1	7	
t_{en}	$\overline{OE}$	Q	2.7 V		9	ns
			3.3 V ± 0.3 V	1	7.5	
t_{dis}	$\overline{OE}$	Q	2.7 V		7	ns
			3.3 V ± 0.3 V	0.5	6.4	

timing requirements over recommended operating free-air temperature range (unless otherwise noted) (see Figure 1)

		V_{CC}	SN74LVC574A T_A = 25°C MIN	TYP	MAX	−40 TO 85°C MIN	MAX	−40 TO 125°C MIN	MAX	UNIT
f_{clock}	Clock frequency	1.8 V ± 0.15 V			55		55		40	MHz
		2.5 V ± 0.2 V			95		95		80	
		2.7 V			150		150		150	
		3.3 V ± 0.3 V			150		150		150	
t_w	Pulse duration, CLK high or low	1.8 V ± 0.15 V	9			9		9		ns
		2.5 V ± 0.2 V	4			4		4		
		2.7 V	3.3			3.3		3.3		
		3.3 V ± 0.3 V	3.3			3.3		3.3		
t_{su}	Setup time, data before CLK↑	1.8 V ± 0.15 V	6			6		6		ns
		2.5 V ± 0.2 V	4			4		4		
		2.7 V	2			2		2		
		3.3 V ± 0.3 V	2			2		2		
t_h	Hold time, data after CLK↑	1.8 V ± 0.15 V	4			4		4		ns
		2.5 V ± 0.2 V	2			2		2		
		2.7 V	1.5			1.5		1.5		
		3.3 V ± 0.3 V	1.5			1.5		1.5		

switching characteristics over recommended operating free-air temperature range (unless otherwise noted) (see Figure 1)

PARAMETER	FROM (INPUT)	TO (OUTPUT)	V_{CC}	SN74LVC574A							UNIT
				T_A = 25°C			−40 TO 85°C		−40 TO 125°C		
				MIN	TYP	MAX	MIN	MAX	MIN	MAX	
f_{max}			1.8 V ± 0.15 V	55			55		40		MHz
			2.5 V ± 02 V	95			95		80		
			2.7 V	150			150		150		
			3.3 V ± 0.3 V	150			150		150		
t_{pd}	CLK	Q	1.8 V ± 0.15 V	1.0	7.1	21.5	1	21.6	1.0	21.6	ns
			2.5 V ± 0.2 V	1.0	4.9	10.0	1	10.5	1.0	10.5	
			2.7 V	1.0	5.0	7.8	1	8	1.0	8.0	
			3.3 V ± 0.3 V	2.2	4.6	6.8	2.2	7	2.2	7.0	
t_{en}	$\overline{OE}$	Q	1.8 V ± 0.15 V	1.0	6.6	19.0	1	19.5	1.0	19.5	ns
			2.5 V ± 0.2 V	1.0	4.8	10.0	1	10.5	1.0	10.5	
			2.7 V	1.0	5.5	8.3	1	8.5	1.0	8.5	
			3.3 V ± 0.3 V	1.5	4.4	7.3	1.5	7.5	1.5	7.5	
t_{dis}	$\overline{OE}$	Q	1.8 V ± 0.15 V	1.0	5.4	18.3	1	18.8	1.0	18.8	ns
			2.5 V ± 0.2 V	1.0	3.0	7.3	1	7.8	1.0	7.8	
			2.7 V	1.0	4.0	6.8	1	7	1.0	7.3	
			3.3 V ± 0.3 V	1.7	3.9	6.2	1.7	6.4	1.7	6.6	
$t_{sk(o)}$			3.3 V ± 0.3 V					1		1	ns

operating characteristics, T_A = 25°C

PARAMETER			TEST CONDITIONS	V_{CC}	TYP	UNIT
C_{pd}	Power dissipation capacitance per flip−flop	Outputs enabled	f = 10 MHz	1.8 V	25	pF
				2.5 V	29	
				3.3 V	30	
		Outputs disabled		1.8 V	9	
				2.5 V	9	
				3.3 V	11	

PARAMETER MEASUREMENT INFORMATION

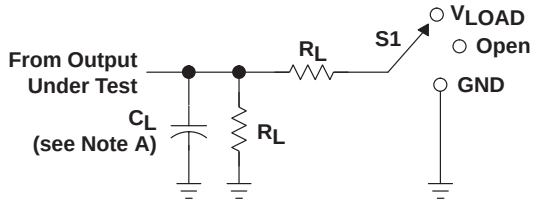

LOAD CIRCUIT

TEST	S1
t_{PLH}/t_{PHL}	Open
t_{PLZ}/t_{PZL}	V_{LOAD}
t_{PHZ}/t_{PZH}	GND

V_{CC}	INPUTS		V_M	V_{LOAD}	C_L	R_L	V_Δ
	V_I	t_r/t_f					
1.8 V ± 0.15 V	V_{CC}	≤2 ns	$V_{CC}/2$	$2 \times V_{CC}$	30 pF	1 kΩ	0.15 V
2.5 V ± 0.2 V	V_{CC}	≤2 ns	$V_{CC}/2$	$2 \times V_{CC}$	30 pF	500 Ω	0.15 V
2.7 V	2.7 V	≤2.5 ns	1.5 V	6 V	50 pF	500 Ω	0.3 V
3.3 V ± 0.3 V	2.7 V	≤2.5 ns	1.5 V	6 V	50 pF	500 Ω	0.3 V

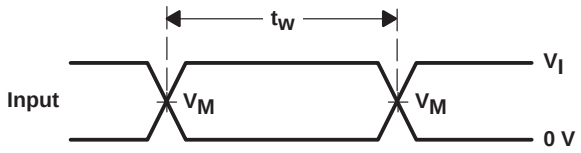

VOLTAGE WAVEFORMS
PULSE DURATION

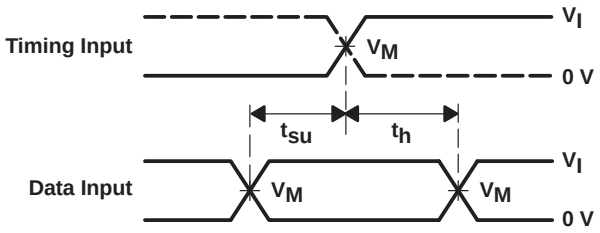

VOLTAGE WAVEFORMS
SETUP AND HOLD TIMES

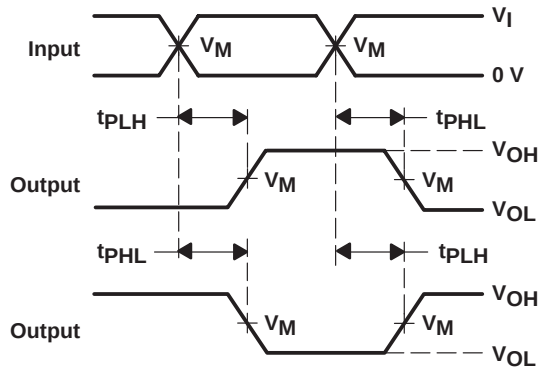

VOLTAGE WAVEFORMS
PROPAGATION DELAY TIMES
INVERTING AND NONINVERTING OUTPUTS

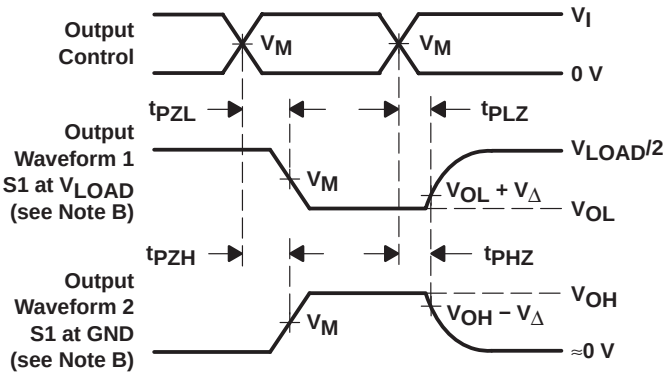

VOLTAGE WAVEFORMS
ENABLE AND DISABLE TIMES
LOW- AND HIGH-LEVEL ENABLING

NOTES: A. C_L includes probe and jig capacitance.
B. Waveform 1 is for an output with internal conditions such that the output is low, except when disabled by the output control. Waveform 2 is for an output with internal conditions such that the output is high, except when disabled by the output control.
C. All input pulses are supplied by generators having the following characteristics: PRR ≤ 10 MHz, Z_O = 50 Ω.
D. The outputs are measured one at a time, with one transition per measurement.
E. t_{PLZ} and t_{PHZ} are the same as t_{dis}.
F. t_{PZL} and t_{PZH} are the same as t_{en}.
G. t_{PLH} and t_{PHL} are the same as t_{pd}.
H. All parameters and waveforms are not applicable to all devices.

Figure 1. Load Circuit and Voltage Waveforms

THERMAL INFORMATION

This package incorporates an exposed thermal pad that is designed to be attached directly to an external heatsink. The thermal pad must be soldered directly to the printed circuit board (PCB), the PCB can be used as a heatsink. In addition, through the use of thermal vias, the thermal pad can be attached directly to a ground plane or special heatsink structure designed into the PCB. This design optimizes the heat transfer from the integrated circuit (IC).

For information on the Quad Flatpack No–Lead (QFN) package and its advantages, refer to Application Report, Quad Flatpack No–Lead Logic Packages, Texas Instruments Literature No. SCBA017. This document is available at www.ti.com.

The exposed thermal pad dimensions for this package are shown in the following illustration.

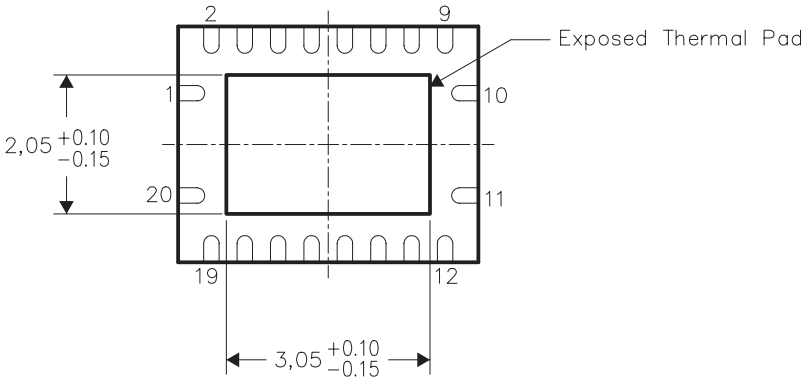

Bottom View

NOTE: All linear dimensions are in millimeters

Exposed Thermal Pad Dimensions

PACKAGING INFORMATION

Orderable Device	Status (1)	Package Type	Package Drawing	Pins	Package Qty	Eco Plan (2)	Lead/Ball Finish	MSL Peak Temp (3)
5962-9757601Q2A	ACTIVE	LCCC	FK	20	1	TBD	POST-PLATE	N / A for Pkg Type
5962-9757601QRA	ACTIVE	CDIP	J	20	1	TBD	A42 SNPB	N / A for Pkg Type
5962-9757601QSA	ACTIVE	CFP	W	20	1	TBD	A42	N / A for Pkg Type
SN74LVC574ADBLE	OBSOLETE	SSOP	DB	20		TBD	Call TI	Call TI
SN74LVC574ADBR	ACTIVE	SSOP	DB	20	2000	Green (RoHS & no Sb/Br)	CU NIPDAU	Level-1-260C-UNLIM
SN74LVC574ADBRE4	ACTIVE	SSOP	DB	20	2000	Green (RoHS & no Sb/Br)	CU NIPDAU	Level-1-260C-UNLIM
SN74LVC574ADBRG4	ACTIVE	SSOP	DB	20	2000	Green (RoHS & no Sb/Br)	CU NIPDAU	Level-1-260C-UNLIM
SN74LVC574ADGVR	ACTIVE	TVSOP	DGV	20	2000	Green (RoHS & no Sb/Br)	CU NIPDAU	Level-1-260C-UNLIM
SN74LVC574ADGVRE4	ACTIVE	TVSOP	DGV	20	2000	Green (RoHS & no Sb/Br)	CU NIPDAU	Level-1-260C-UNLIM
SN74LVC574ADGVRG4	ACTIVE	TVSOP	DGV	20	2000	Green (RoHS & no Sb/Br)	CU NIPDAU	Level-1-260C-UNLIM
SN74LVC574ADW	ACTIVE	SOIC	DW	20	25	Green (RoHS & no Sb/Br)	CU NIPDAU	Level-1-260C-UNLIM
SN74LVC574ADWE4	ACTIVE	SOIC	DW	20	25	Green (RoHS & no Sb/Br)	CU NIPDAU	Level-1-260C-UNLIM
SN74LVC574ADWG4	ACTIVE	SOIC	DW	20	25	Green (RoHS & no Sb/Br)	CU NIPDAU	Level-1-260C-UNLIM
SN74LVC574ADWR	ACTIVE	SOIC	DW	20	2000	Green (RoHS & no Sb/Br)	CU NIPDAU	Level-1-260C-UNLIM
SN74LVC574ADWRE4	ACTIVE	SOIC	DW	20	2000	Green (RoHS & no Sb/Br)	CU NIPDAU	Level-1-260C-UNLIM
SN74LVC574ADWRG4	ACTIVE	SOIC	DW	20	2000	Green (RoHS & no Sb/Br)	CU NIPDAU	Level-1-260C-UNLIM
SN74LVC574AGQNR	NRND	BGA MI CROSTA R JUNI OR	GQN	20	1000	TBD	SNPB	Level-1-240C-UNLIM
SN74LVC574AN	ACTIVE	PDIP	N	20	20	Pb-Free (RoHS)	CU NIPDAU	N / A for Pkg Type
SN74LVC574ANE4	ACTIVE	PDIP	N	20	20	Pb-Free (RoHS)	CU NIPDAU	N / A for Pkg Type
SN74LVC574ANSR	ACTIVE	SO	NS	20	2000	Green (RoHS & no Sb/Br)	CU NIPDAU	Level-1-260C-UNLIM
SN74LVC574ANSRE4	ACTIVE	SO	NS	20	2000	Green (RoHS & no Sb/Br)	CU NIPDAU	Level-1-260C-UNLIM
SN74LVC574ANSRG4	ACTIVE	SO	NS	20	2000	Green (RoHS & no Sb/Br)	CU NIPDAU	Level-1-260C-UNLIM
SN74LVC574APW	ACTIVE	TSSOP	PW	20	70	Green (RoHS & no Sb/Br)	CU NIPDAU	Level-1-260C-UNLIM
SN74LVC574APWE4	ACTIVE	TSSOP	PW	20	70	Green (RoHS & no Sb/Br)	CU NIPDAU	Level-1-260C-UNLIM
SN74LVC574APWG4	ACTIVE	TSSOP	PW	20	70	Green (RoHS & no Sb/Br)	CU NIPDAU	Level-1-260C-UNLIM
SN74LVC574APWLE	OBSOLETE	TSSOP	PW	20		TBD	Call TI	Call TI

Orderable Device	Status [1]	Package Type	Package Drawing	Pins	Package Qty	Eco Plan [2]	Lead/Ball Finish	MSL Peak Temp [3]
SN74LVC574APWR	ACTIVE	TSSOP	PW	20	2000	Green (RoHS & no Sb/Br)	CU NIPDAU	Level-1-260C-UNLIM
SN74LVC574APWRE4	ACTIVE	TSSOP	PW	20	2000	Green (RoHS & no Sb/Br)	CU NIPDAU	Level-1-260C-UNLIM
SN74LVC574APWRG4	ACTIVE	TSSOP	PW	20	2000	Green (RoHS & no Sb/Br)	CU NIPDAU	Level-1-260C-UNLIM
SN74LVC574APWT	ACTIVE	TSSOP	PW	20	250	Green (RoHS & no Sb/Br)	CU NIPDAU	Level-1-260C-UNLIM
SN74LVC574APWTE4	ACTIVE	TSSOP	PW	20	250	Green (RoHS & no Sb/Br)	CU NIPDAU	Level-1-260C-UNLIM
SN74LVC574APWTG4	ACTIVE	TSSOP	PW	20	250	Green (RoHS & no Sb/Br)	CU NIPDAU	Level-1-260C-UNLIM
SN74LVC574ARGYR	ACTIVE	QFN	RGY	20	1000	Green (RoHS & no Sb/Br)	CU NIPDAU	Level-2-260C-1 YEAR
SN74LVC574ARGYRG4	ACTIVE	QFN	RGY	20	1000	Green (RoHS & no Sb/Br)	CU NIPDAU	Level-2-260C-1 YEAR
SN74LVC574AZQNR	ACTIVE	BGA MI CROSTA R JUNI OR	ZQN	20	1000	Green (RoHS & no Sb/Br)	SNAGCU	Level-1-260C-UNLIM
SNJ54LVC574AFK	ACTIVE	LCCC	FK	20	1	TBD	POST-PLATE	N / A for Pkg Type
SNJ54LVC574AJ	ACTIVE	CDIP	J	20	1	TBD	A42 SNPB	N / A for Pkg Type
SNJ54LVC574AW	ACTIVE	CFP	W	20	1	TBD	A42	N / A for Pkg Type

[1] The marketing status values are defined as follows:
ACTIVE: Product device recommended for new designs.
LIFEBUY: TI has announced that the device will be discontinued, and a lifetime-buy period is in effect.
NRND: Not recommended for new designs. Device is in production to support existing customers, but TI does not recommend using this part in a new design.
PREVIEW: Device has been announced but is not in production. Samples may or may not be available.
OBSOLETE: TI has discontinued the production of the device.

[2] Eco Plan - The planned eco-friendly classification: Pb-Free (RoHS), Pb-Free (RoHS Exempt), or Green (RoHS & no Sb/Br) - please check http://www.ti.com/productcontent for the latest availability information and additional product content details.
TBD: The Pb-Free/Green conversion plan has not been defined.
Pb-Free (RoHS): TI's terms "Lead-Free" or "Pb-Free" mean semiconductor products that are compatible with the current RoHS requirements for all 6 substances, including the requirement that lead not exceed 0.1% by weight in homogeneous materials. Where designed to be soldered at high temperatures, TI Pb-Free products are suitable for use in specified lead-free processes.
Pb-Free (RoHS Exempt): This component has a RoHS exemption for either 1) lead-based flip-chip solder bumps used between the die and package, or 2) lead-based die adhesive used between the die and leadframe. The component is otherwise considered Pb-Free (RoHS compatible) as defined above.
Green (RoHS & no Sb/Br): TI defines "Green" to mean Pb-Free (RoHS compatible), and free of Bromine (Br) and Antimony (Sb) based flame retardants (Br or Sb do not exceed 0.1% by weight in homogeneous material)

[3] MSL, Peak Temp. -- The Moisture Sensitivity Level rating according to the JEDEC industry standard classifications, and peak solder temperature.

Important Information and Disclaimer: The information provided on this page represents TI's knowledge and belief as of the date that it is provided. TI bases its knowledge and belief on information provided by third parties, and makes no representation or warranty as to the accuracy of such information. Efforts are underway to better integrate information from third parties. TI has taken and continues to take reasonable steps to provide representative and accurate information but may not have conducted destructive testing or chemical analysis on incoming materials and chemicals. TI and TI suppliers consider certain information to be proprietary, and thus CAS numbers and other limited information may not be available for release.

In no event shall TI's liability arising out of such information exceed the total purchase price of the TI part(s) at issue in this document sold by TI to Customer on an annual basis.

TAPE AND REEL BOX INFORMATION

REEL DIMENSIONS

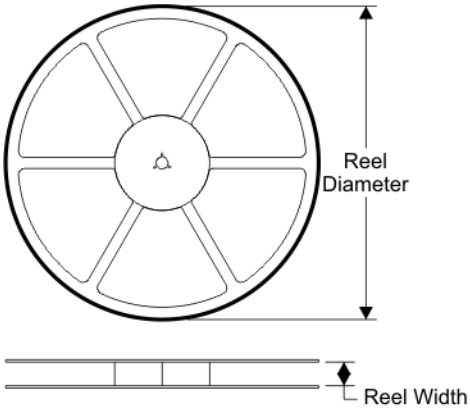

TAPE DIMENSIONS

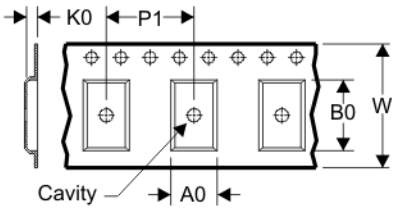

A0	Dimension designed to accommodate the component width
B0	Dimension designed to accommodate the component length
K0	Dimension designed to accommodate the component thickness
W	Overall width of the carrier tape
P1	Pitch between successive cavity centers

QUADRANT ASSIGNMENTS FOR PIN 1 ORIENTATION IN TAPE

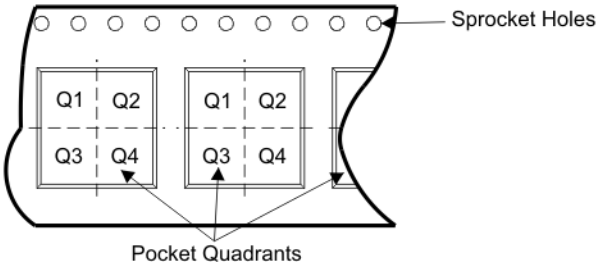

Device	Package	Pins	Site	Reel Diameter (mm)	Reel Width (mm)	A0 (mm)	B0 (mm)	K0 (mm)	P1 (mm)	W (mm)	Pin1 Quadrant
SN74LVC574ADBR	DB	20	SITE 41	330	16	8.2	7.5	2.5	12	16	Q1
SN74LVC574ADGVR	DGV	20	SITE 41	330	12	7.0	5.6	1.6	8	12	Q1
SN74LVC574ADWR	DW	20	SITE 41	330	24	10.8	13.0	2.7	12	24	Q1
SN74LVC574AGQNR	GQN	20	SITE 32	330	12	3.3	4.3	1.5	8	12	Q1
SN74LVC574AGQNR	GQN	20	SITE 60	330	12	3.3	4.3	1.6	8	12	Q1
SN74LVC574APWR	PW	20	SITE 41	330	16	6.95	7.1	1.6	8	16	Q1
SN74LVC574ARGYR	RGY	20	SITE 41	180	12	3.8	4.8	1.6	8	12	Q1
SN74LVC574AZQNR	ZQN	20	SITE 32	330	12	3.3	4.3	1.5	8	12	Q1
SN74LVC574AZQNR	ZQN	20	SITE 60	330	12	3.3	4.3	1.6	8	12	Q1

TAPE AND REEL BOX DIMENSIONS

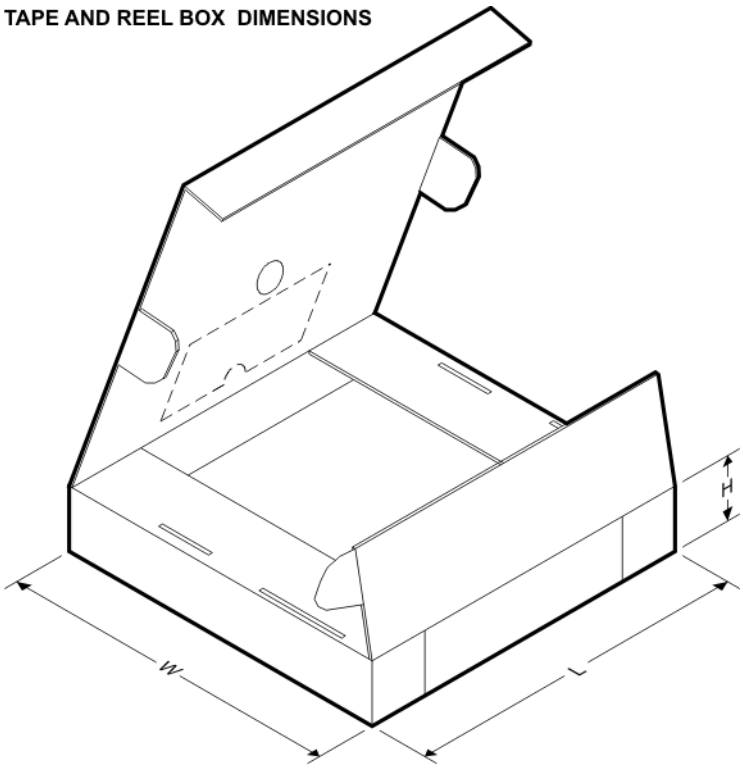

Device	Package	Pins	Site	Length (mm)	Width (mm)	Height (mm)
SN74LVC574ADBR	DB	20	SITE 41	346.0	346.0	33.0
SN74LVC574ADGVR	DGV	20	SITE 41	346.0	346.0	29.0
SN74LVC574ADWR	DW	20	SITE 41	346.0	346.0	41.0
SN74LVC574AGQNR	GQN	20	SITE 32	346.0	346.0	29.0
SN74LVC574AGQNR	GQN	20	SITE 60	342.9	336.6	20.64
SN74LVC574APWR	PW	20	SITE 41	346.0	346.0	33.0
SN74LVC574ARGYR	RGY	20	SITE 41	190.0	212.7	31.75
SN74LVC574AZQNR	ZQN	20	SITE 32	346.0	346.0	29.0
SN74LVC574AZQNR	ZQN	20	SITE 60	342.9	336.6	20.64

J (R–GDIP–T**) CERAMIC DUAL IN–LINE PACKAGE

14 LEADS SHOWN

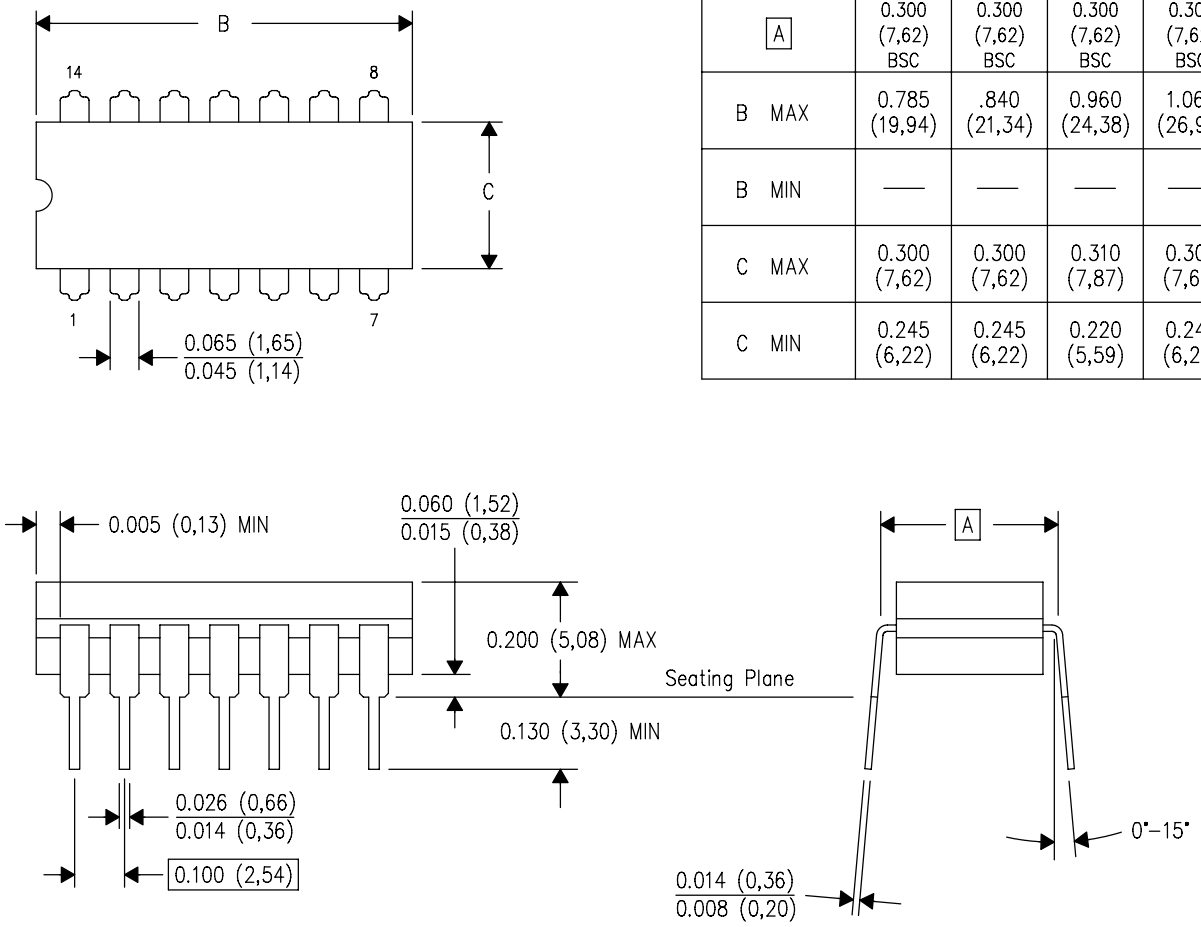

DIM \ PINS **	14	16	18	20
A	0.300 (7,62) BSC	0.300 (7,62) BSC	0.300 (7,62) BSC	0.300 (7,62) BSC
B MAX	0.785 (19,94)	.840 (21,34)	0.960 (24,38)	1.060 (26,92)
B MIN	—	—	—	—
C MAX	0.300 (7,62)	0.300 (7,62)	0.310 (7,87)	0.300 (7,62)
C MIN	0.245 (6,22)	0.245 (6,22)	0.220 (5,59)	0.245 (6,22)

4040083/F 03/03

NOTES:
- A. All linear dimensions are in inches (millimeters).
- B. This drawing is subject to change without notice.
- C. This package is hermetically sealed with a ceramic lid using glass frit.
- D. Index point is provided on cap for terminal identification only on press ceramic glass frit seal only.
- E. Falls within MIL STD 1835 GDIP1–T14, GDIP1–T16, GDIP1–T18 and GDIP1–T20.

W (R–GDFP–F20) CERAMIC DUAL FLATPACK

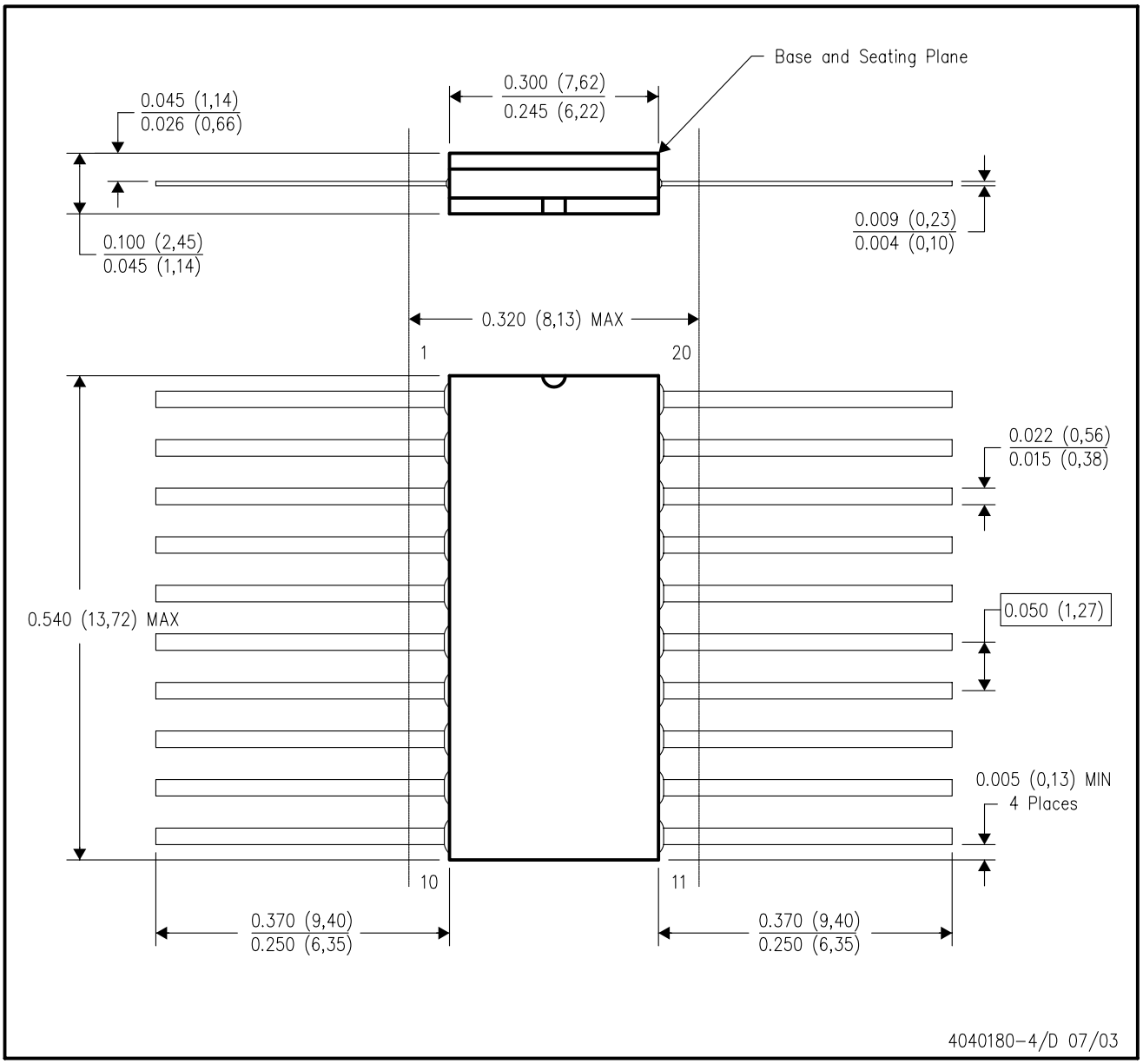

NOTES:
A. All linear dimensions are in inches (millimeters).
B. This drawing is subject to change without notice.
C. This package can be hermetically sealed with a ceramic lid using glass frit.
D. Index point is provided on cap for terminal identification only.
E. Falls within Mil–Std 1835 GDFP2–F20

FK (S-CQCC-N**)

LEADLESS CERAMIC CHIP CARRIER

28 TERMINAL SHOWN

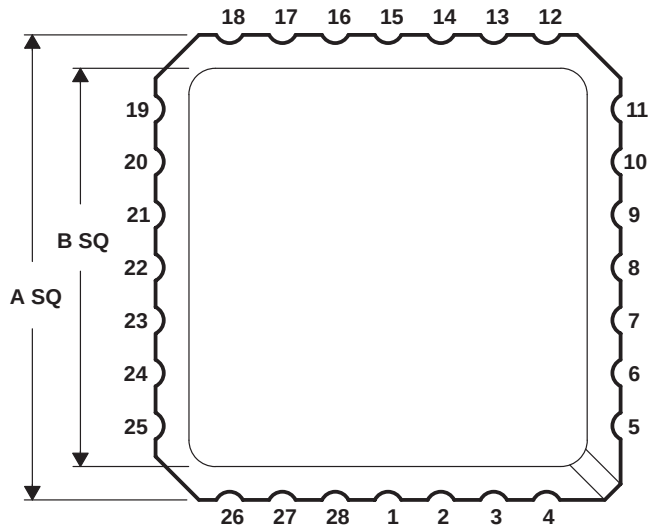

NO. OF TERMINALS **	A		B	
	MIN	MAX	MIN	MAX
20	0.342 (8,69)	0.358 (9,09)	0.307 (7,80)	0.358 (9,09)
28	0.442 (11,23)	0.458 (11,63)	0.406 (10,31)	0.458 (11,63)
44	0.640 (16,26)	0.660 (16,76)	0.495 (12,58)	0.560 (14,22)
52	0.739 (18,78)	0.761 (19,32)	0.495 (12,58)	0.560 (14,22)
68	0.938 (23,83)	0.962 (24,43)	0.850 (21,6)	0.858 (21,8)
84	1.141 (28,99)	1.165 (29,59)	1.047 (26,6)	1.063 (27,0)

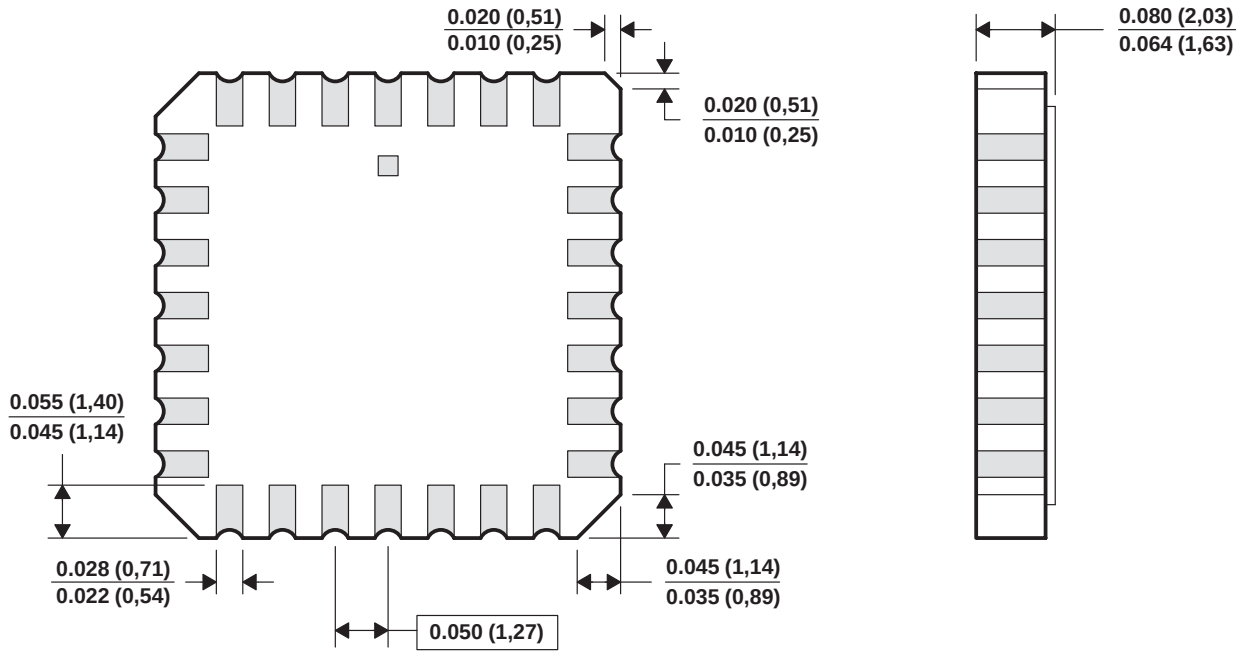

4040140/D 10/96

NOTES:
A. All linear dimensions are in inches (millimeters).
B. This drawing is subject to change without notice.
C. This package can be hermetically sealed with a metal lid.
D. The terminals are gold plated.
E. Falls within JEDEC MS-004

GQN (R–PBGA–N20) PLASTIC BALL GRID ARRAY

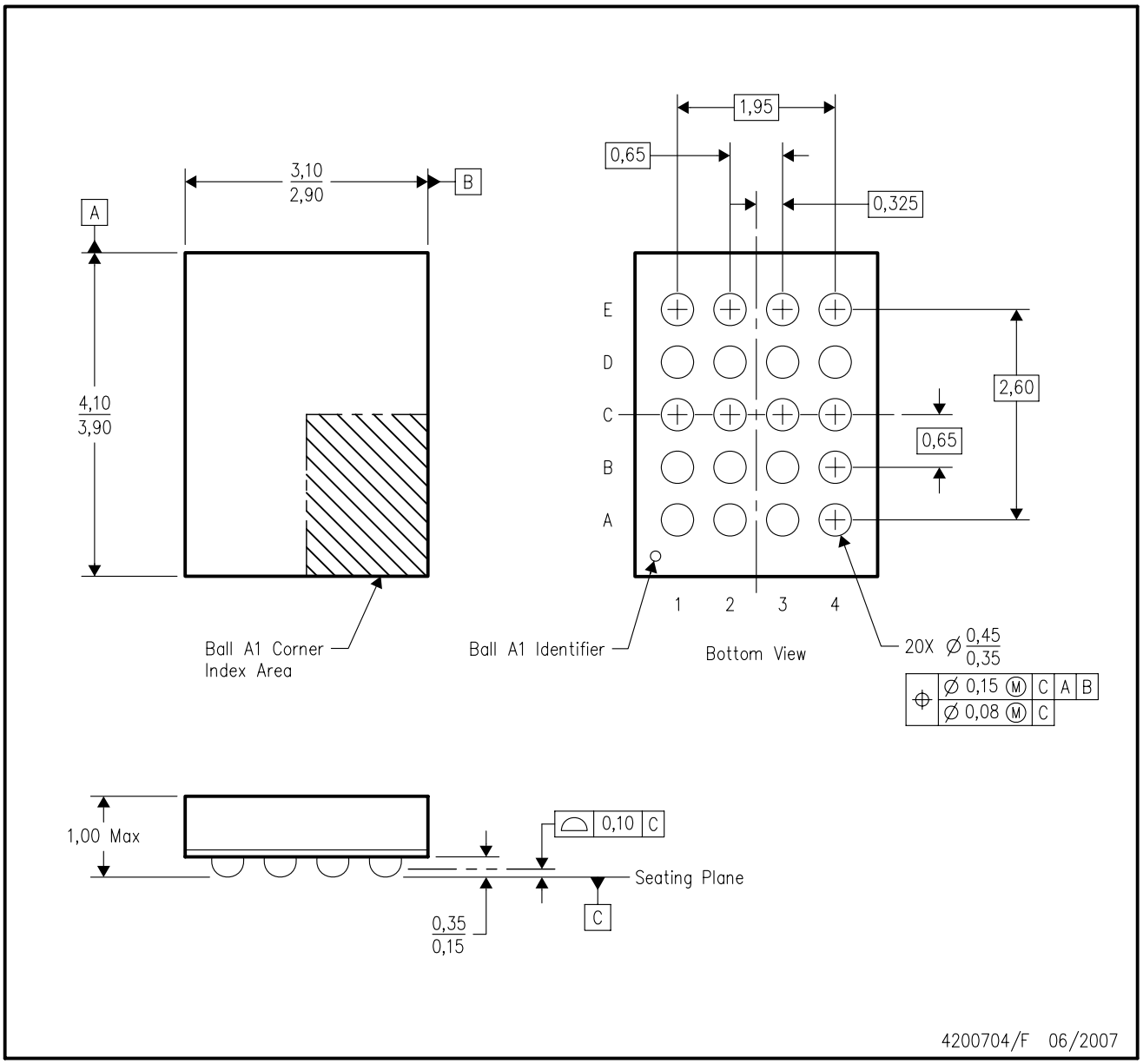

NOTES:
A. All linear dimensions are in millimeters. Dimensioning and tolerancing per ASME Y14.5M–1994.
B. This drawing is subject to change without notice.
C. Falls within JEDEC MO–285 variation BC–2.
D. This package is tin–lead (SnPb). Refer to the 20 ZQN package (drawing 4204492) for lead–free.

ZQN (R–PBGA–N20) PLASTIC BALL GRID ARRAY

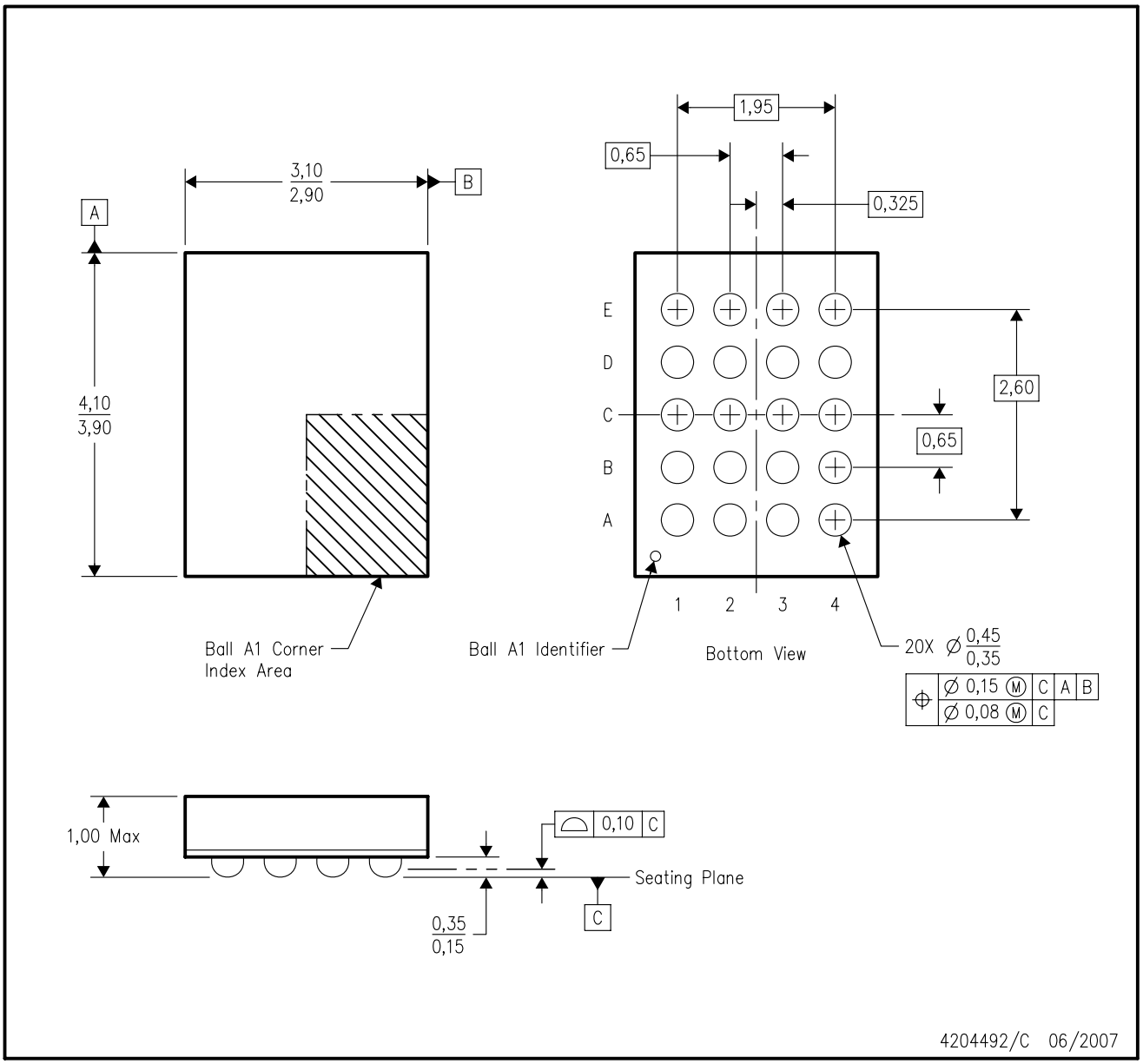

NOTES:
A. All linear dimensions are in millimeters. Dimensioning and tolerancing per ASME Y14.5M–1994.
B. This drawing is subject to change without notice.
C. Falls within JEDEC MO–285 variation BC–2.
D. This package is lead–free. Refer to the 20 GQN package (drawing 4200704) for tin–lead (SnPb).

N (R–PDIP–T**) PLASTIC DUAL–IN–LINE PACKAGE

16 PINS SHOWN

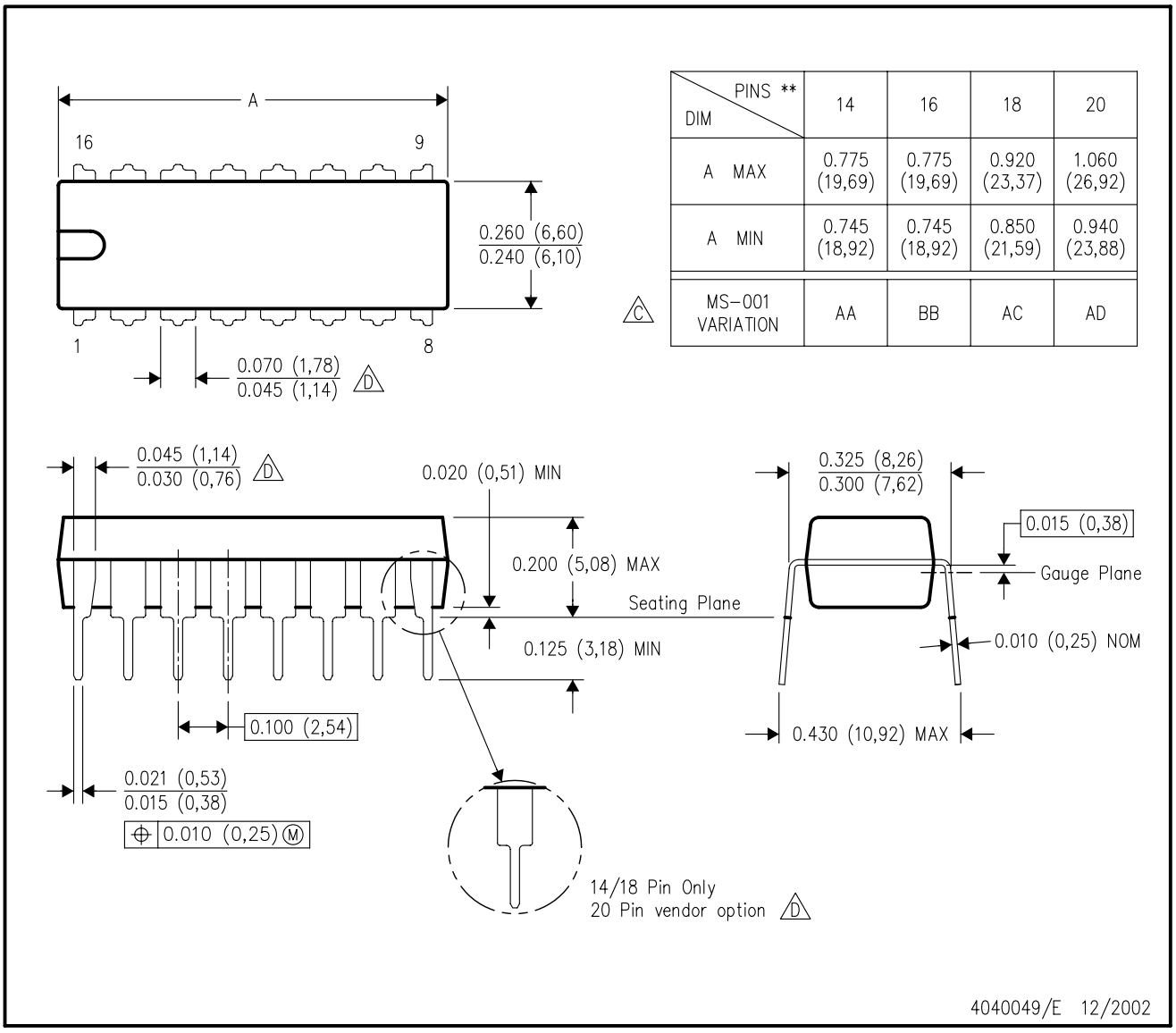

DIM \ PINS **	14	16	18	20
A MAX	0.775 (19,69)	0.775 (19,69)	0.920 (23,37)	1.060 (26,92)
A MIN	0.745 (18,92)	0.745 (18,92)	0.850 (21,59)	0.940 (23,88)
MS–001 VARIATION (C)	AA	BB	AC	AD

NOTES:
A. All linear dimensions are in inches (millimeters).
B. This drawing is subject to change without notice.
C. Falls within JEDEC MS–001, except 18 and 20 pin minimum body length (Dim A).
D. The 20 pin end lead shoulder width is a vendor option, either half or full width.

DGV (R-PDSO-G)** **PLASTIC SMALL-OUTLINE**

24 PINS SHOWN

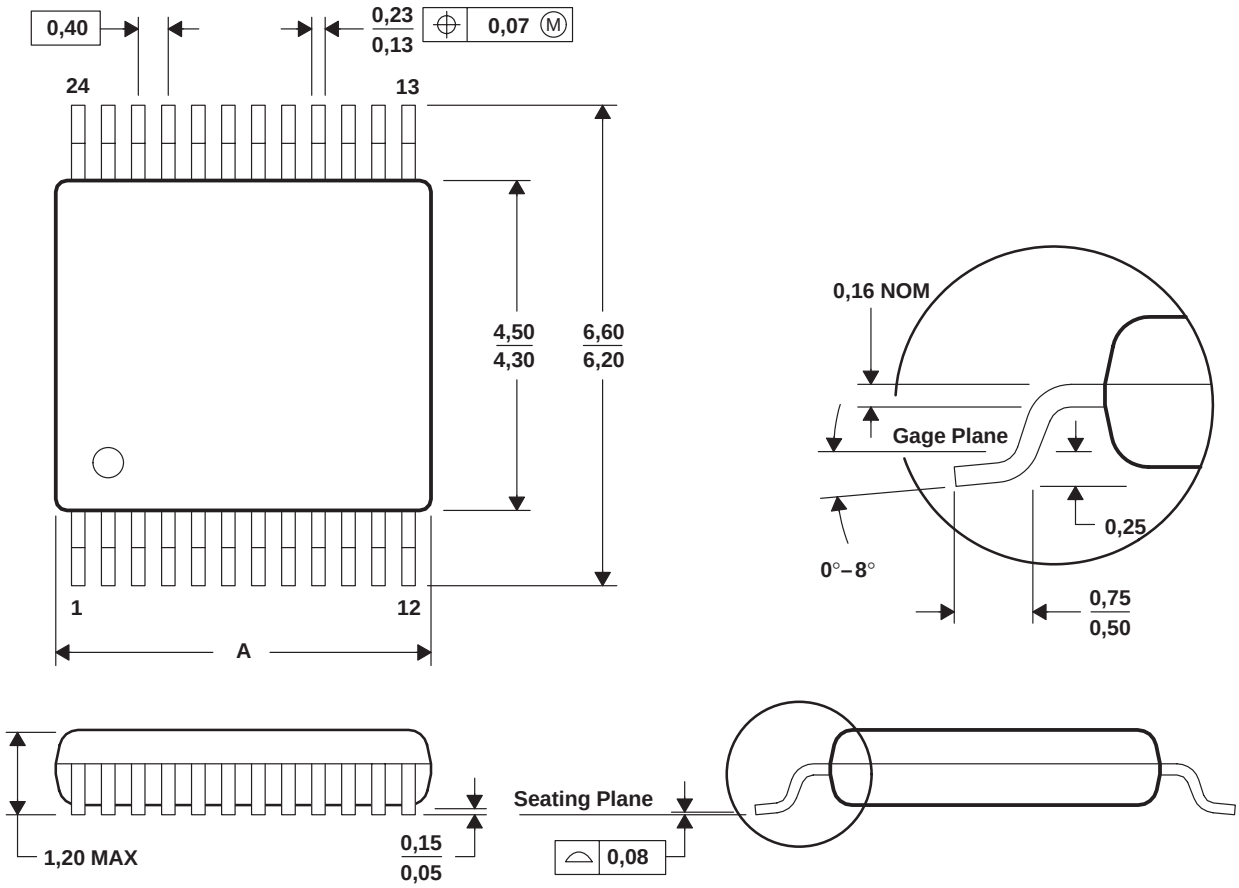

DIM \ PINS **	14	16	20	24	38	48	56
A MAX	3,70	3,70	5,10	5,10	7,90	9,80	11,40
A MIN	3,50	3,50	4,90	4,90	7,70	9,60	11,20

4073251/E 08/00

NOTES: A. All linear dimensions are in millimeters.
B. This drawing is subject to change without notice.
C. Body dimensions do not include mold flash or protrusion, not to exceed 0,15 per side.
D. Falls within JEDEC: 24/48 Pins – MO-153
14/16/20/56 Pins – MO-194

DW (R–PDSO–G20) PLASTIC SMALL–OUTLINE PACKAGE

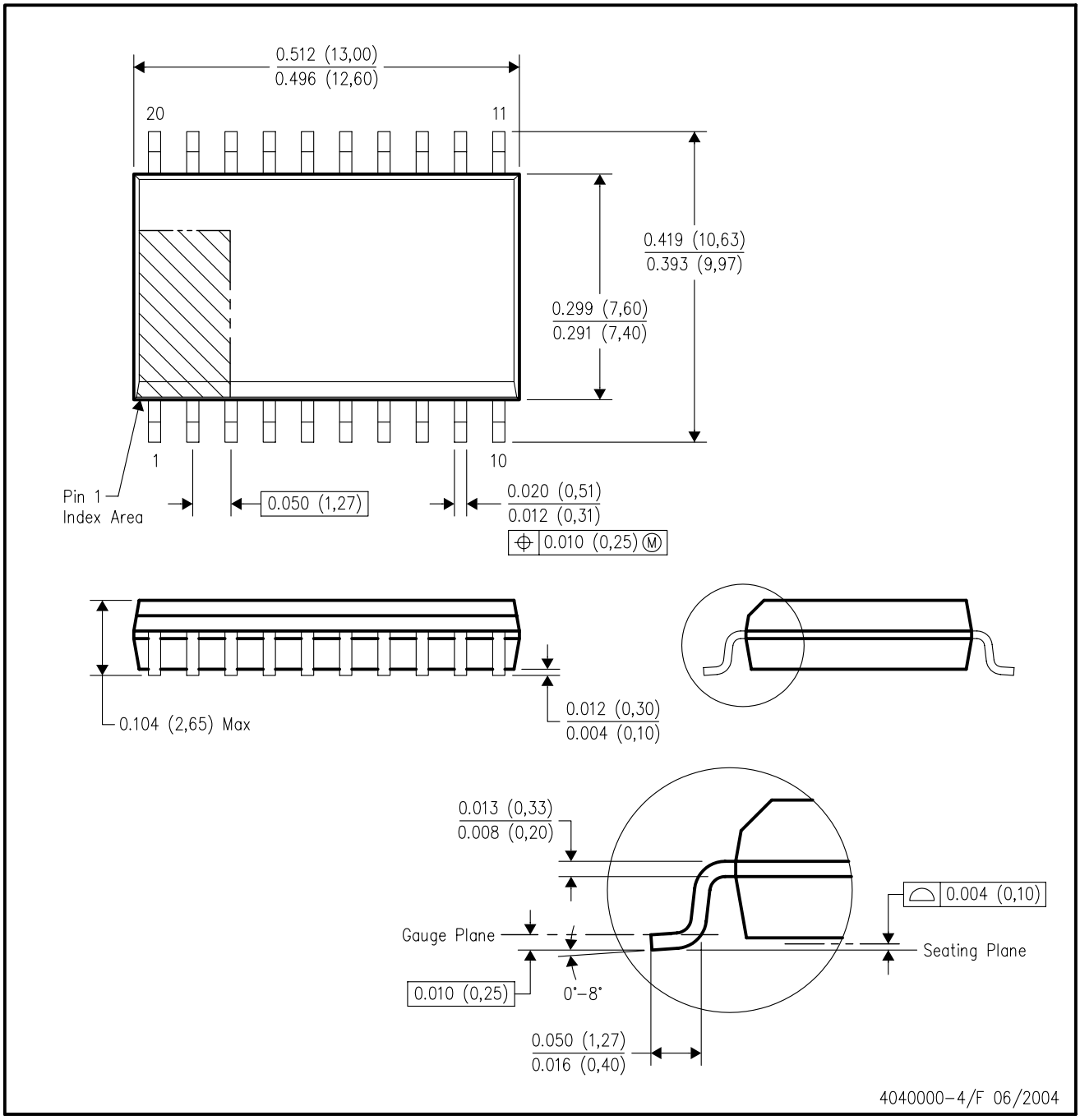

NOTES:
A. All linear dimensions are in inches (millimeters).
B. This drawing is subject to change without notice.
C. Body dimensions do not include mold flash or protrusion not to exceed 0.006 (0,15).
D. Falls within JEDEC MS–013 variation AC.

RGY (R–PQFP–N20) PLASTIC QUAD FLATPACK

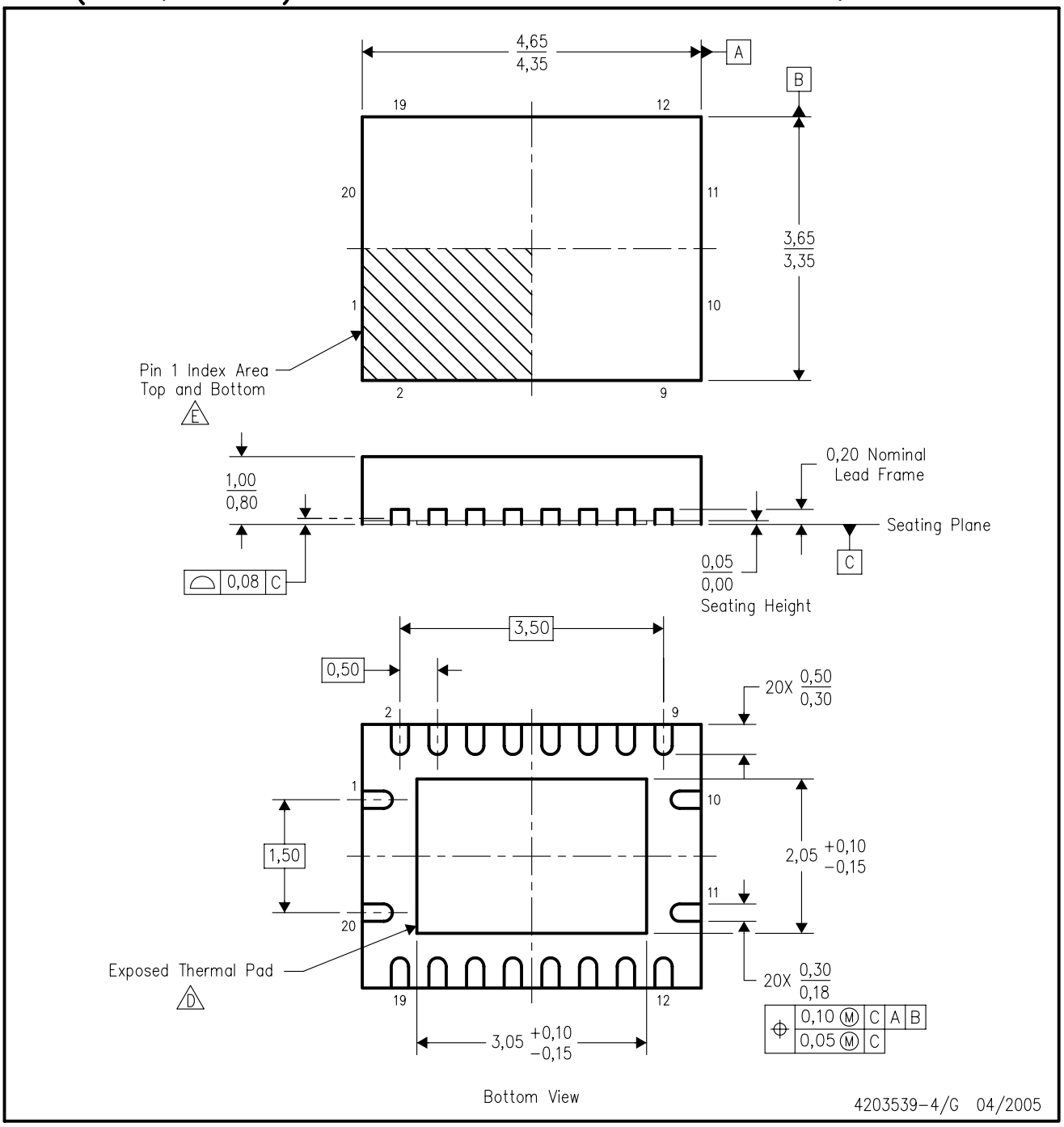

NOTES:
A. All linear dimensions are in millimeters. Dimensioning and tolerancing per ASME Y14.5M–1994.
B. This drawing is subject to change without notice.
C. QFN (Quad Flatpack No–Lead) package configuration.
D. The package thermal pad must be soldered to the board for thermal and mechanical performance.
E. Pin 1 identifiers are located on both top and bottom of the package and within the zone indicated. The Pin 1 identifiers are either a molded, marked, or metal feature.
F. Package complies to JEDEC MO–241 variation BC.

THERMAL INFORMATION

This package incorporates an exposed thermal pad that is designed to be attached directly to an external heatsink. The thermal pad must be soldered directly to the printed circuit board (PCB). After soldering, the PCB can be used as a heatsink. In addition, through the use of thermal vias, the thermal pad can be attached directly to the appropriate copper plane shown in the electrical schematic for the device, or alternatively, can be attached to a special heatsink structure designed into the PCB. This design optimizes the heat transfer from the integrated circuit (IC).

For information on the Quad Flatpack No–Lead (QFN) package and its advantages, refer to Application Report, Quad Flatpack No–Lead Logic Packages, Texas Instruments Literature No. SCBA017. This document is available at www.ti.com.

The exposed thermal pad dimensions for this package are shown in the following illustration.

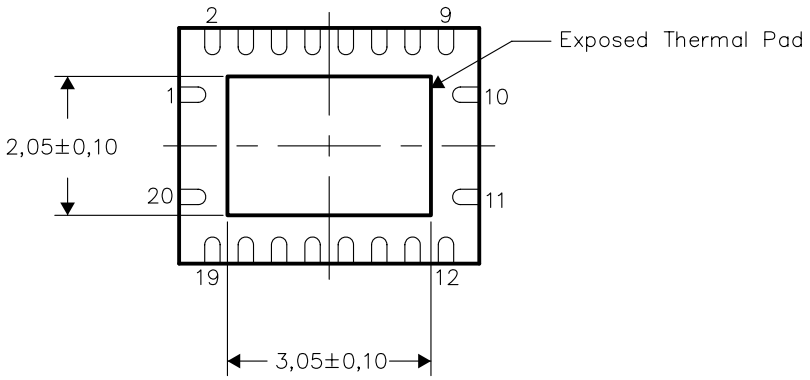

Bottom View

NOTE: All linear dimensions are in millimeters

Exposed Thermal Pad Dimensions

RGY (R–PQFP–N20)

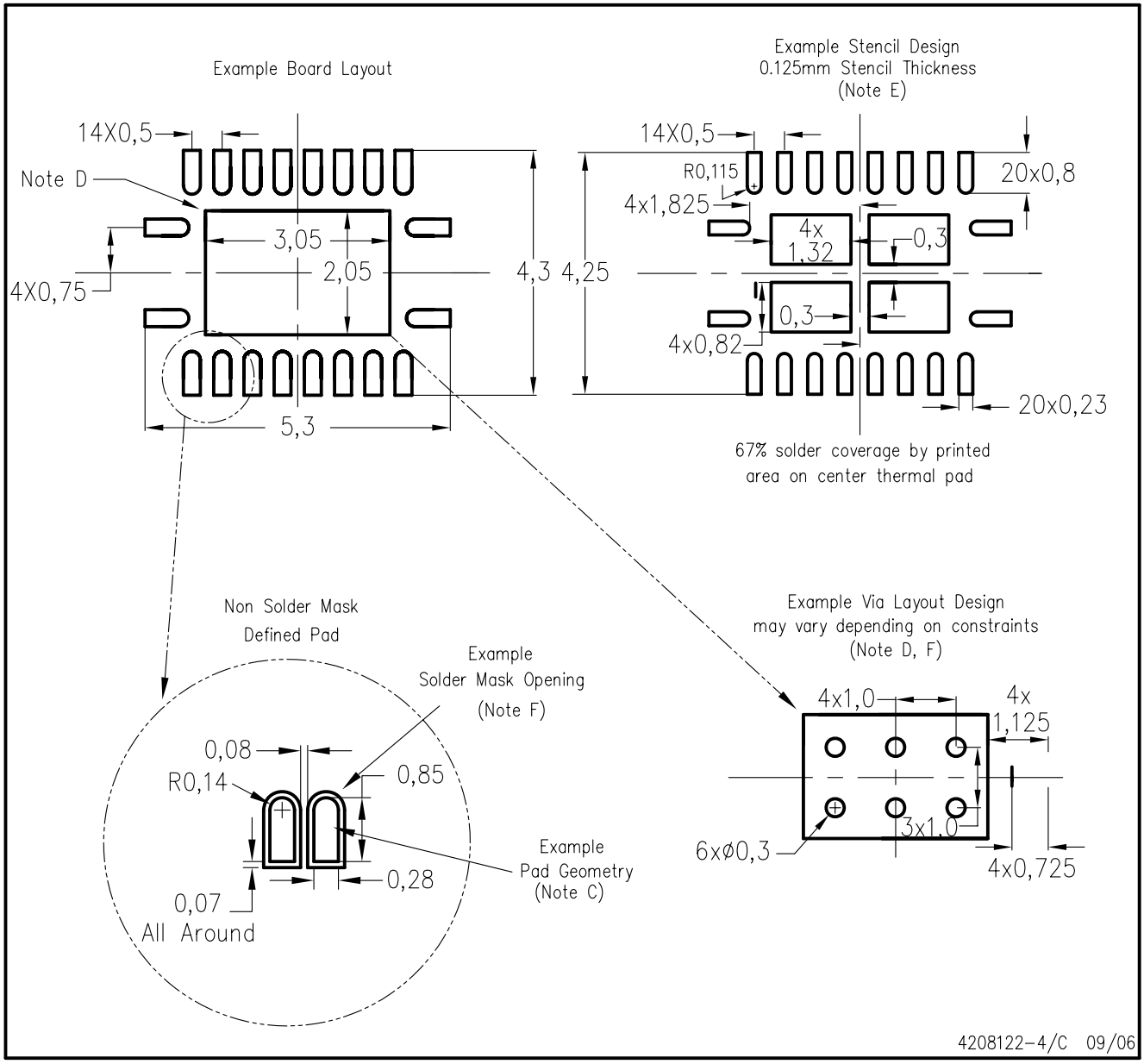

NOTES:
A. All linear dimensions are in millimeters.
B. This drawing is subject to change without notice.
C. Publication IPC–7351 is recommended for alternate designs.
D. This package is designed to be soldered to a thermal pad on the board. Refer to Application Note, Quad Flat–Pack Packages, Texas Instruments Literature No. SCBA017, SLUA271, and also the Product Data Sheets for specific thermal information, via requirements, and recommended board layout. These documents are available at www.ti.com <http://www.ti.com>.
E. Laser cutting apertures with trapezoidal walls and also rounding corners will offer better paste release. Customers should contact their board assembly site for stencil design recommendations. Refer to IPC 7525 for stencil design considerations.
F. Customers should contact their board fabrication site for minimum solder mask web tolerances between signal pads.

MECHANICAL DATA

NS (R-PDSO-G)** **PLASTIC SMALL-OUTLINE PACKAGE**

14-PINS SHOWN

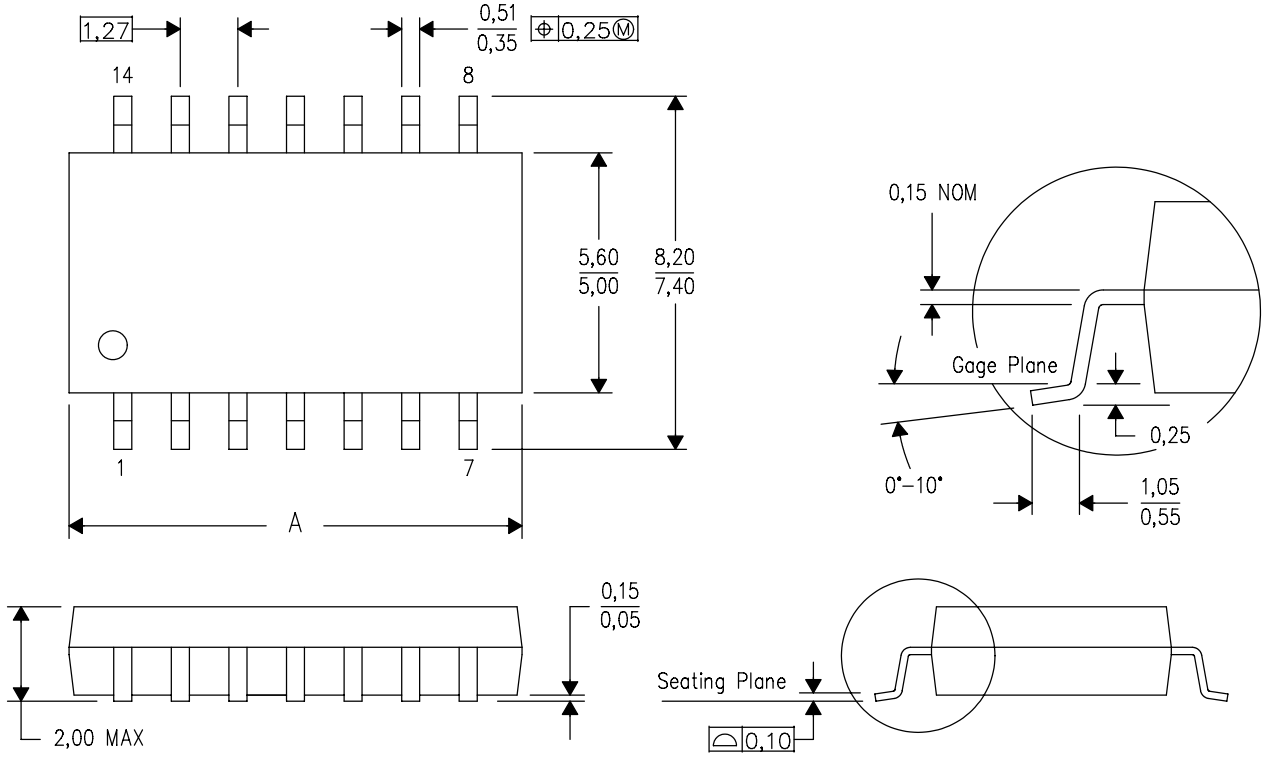

DIM \ PINS **	14	16	20	24
A MAX	10,50	10,50	12,90	15,30
A MIN	9,90	9,90	12,30	14,70

4040062/C 03/03

NOTES:
A. All linear dimensions are in millimeters.
B. This drawing is subject to change without notice.
C. Body dimensions do not include mold flash or protrusion, not to exceed 0,15.

DB (R-PDSO-G)** **PLASTIC SMALL-OUTLINE**

28 PINS SHOWN

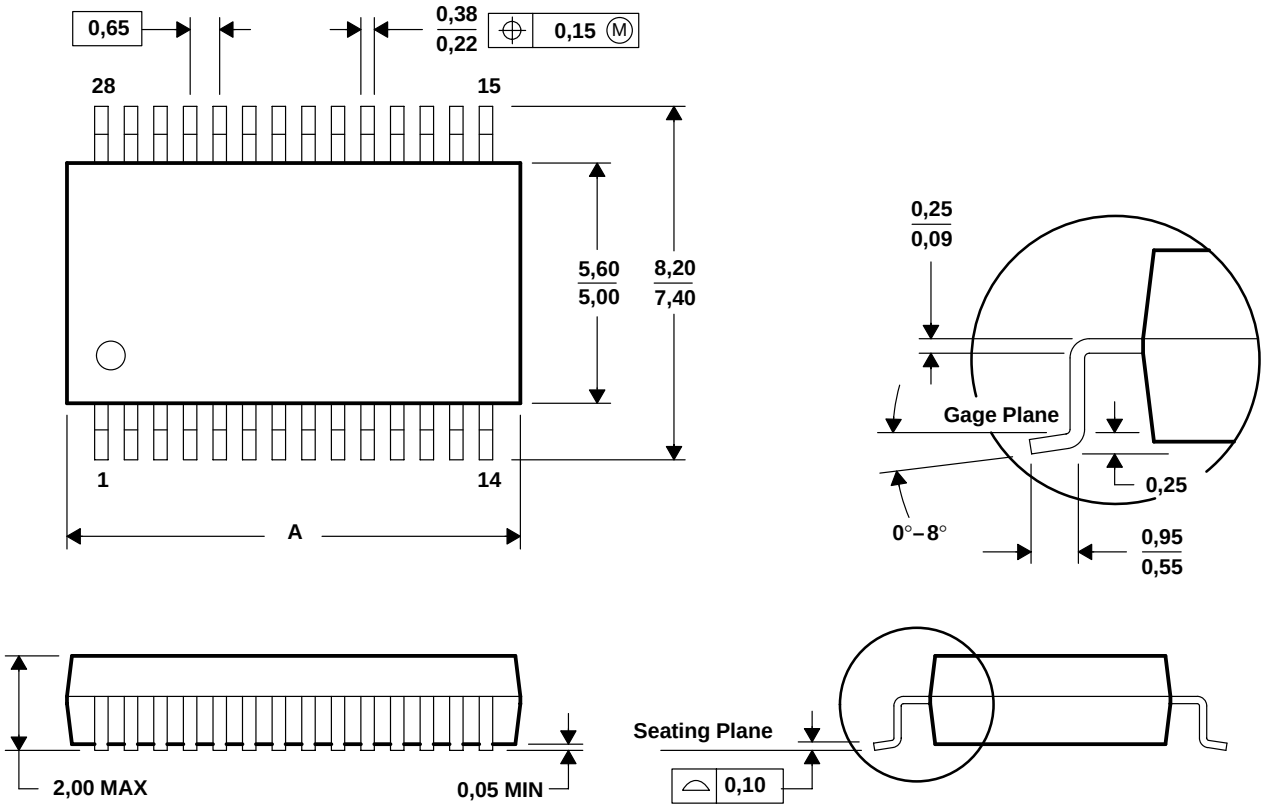

DIM \ PINS **	14	16	20	24	28	30	38
A MAX	6,50	6,50	7,50	8,50	10,50	10,50	12,90
A MIN	5,90	5,90	6,90	7,90	9,90	9,90	12,30

4040065 /E 12/01

NOTES: A. All linear dimensions are in millimeters.
B. This drawing is subject to change without notice.
C. Body dimensions do not include mold flash or protrusion not to exceed 0,15.
D. Falls within JEDEC MO-150

PW (R-PDSO-G)** **PLASTIC SMALL-OUTLINE PACKAGE**

14 PINS SHOWN

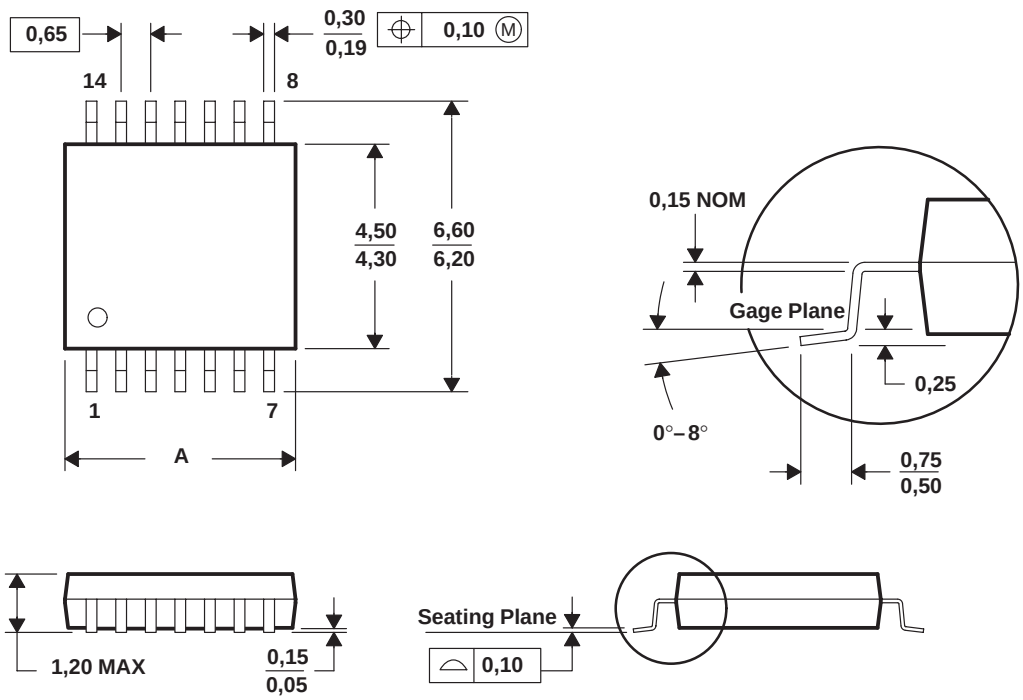

DIM \ PINS **	8	14	16	20	24	28
A MAX	3,10	5,10	5,10	6,60	7,90	9,80
A MIN	2,90	4,90	4,90	6,40	7,70	9,60

4040064/F 01/97

NOTES: A. All linear dimensions are in millimeters.
B. This drawing is subject to change without notice.
C. Body dimensions do not include mold flash or protrusion not to exceed 0,15.
D. Falls within JEDEC MO-153