# SERVICE MANUAL

**MODEL: VCI-100MKII**

STANDARD SETTING

| Control part | Setup location |
|---|---|
| HP Level VR | Max |
| Input Level VR | Max |

* Test with adapter ( 7.5V 1A )
* Headphone Loading Z= 34Ω ( 68Ω || 68Ω )

Software : Cubase SX on Windows XP

Datasheet.Directory

OUTPUT PERFORMANCE TEST：

| | Measurement signal | Signal from Cubase SX by USB | Specification | Remark |
|---|---|---|---|---|
| Output Level | Master Output 1/2 | 1KHz,0dBV Sine Wave | 5.8dBV±0.2dBV | Flter : none |
| | Headphone Output | 1KHz,0dBV Sine Wave | 4.4dBV±0.2dBV | Flter : none |
| THD+N | Master Output 1/2 | 1KHz,0dBV Sine Wave | Less than 0.02% | Flter : "A" |
| | Headphone Output | 1KHz,0dBV Sine Wave | Less than 0.09% | Flter : "A" |
| S/N Ratio | Master Output 1/2 | no singnal input | Less than -80dBV | Flter : "A" |
| | Headphone Output | no singnal input | Less than -80dBV | Flter : "A" |
| Separating | Master Output 1/2 | 1KHz,0dBV Sine Wave | Less than -80dBV | Flter : "A" |
| Crosstalk | Headphone Output | 1KHz,0dBV Sine Wave | Less than -70dBV | Flter : "A" |
| Frequency Response | Master Output 1/2 | 20Hz,0dBV Sine Wave | ±2dBV Compare with 1KHz,0dBV output level | Flter : none |
| | | 100Hz,0dBV Sine Wave | ±2dBV Compare with 1KHz,0dBV output level | Flter : none |
| | | 10KHz,0dBV Sine Wave | ±2dBV Compare with 1KHz,0dBV output level | Flter : none |
| | | 20KHz,0dBV Sine Wave | ±2dBV Compare with 1KHz,0dBV output level | Flter : none |

OUTPUT PERFORMANCE TEST：

| | Measurement signal | Signal from Cubase SX by USB | Specification | Remark |
|---|---|---|---|---|
| Frequency Response | Headphone Output | 20Hz,0dBV Sine Wave | ±2dBV Compare with 1KHz,0dBV output level | Flter : none |
| | | 100Hz,0dBV Sine Wave | ±2dBV Compare with 1KHz,0dBV output level | Flter : none |
| | | 10KHz,0dBV Sine Wave | ±2dBV Compare with 1KHz,0dBV output level | Flter : none |
| | | 20KHz,0dBV Sine Wave | ±2dBV Compare with 1KHz,0dBV output level | Flter : none |

INTPUT PERFORMANCE TEST：

Input signal setting on AP："1KHz , 0dBV"；"Sine Wave"；"Unbalance output"；"Output impedance Z = 50Ω". Record the signal from AP to Cubase SX by VCI-100MKII ( Sound Card ) , than output the recorded signal form Cubase SX.

Measure the signal of Master output 1

| | Measurement signal | Signal from Cubase SX by USB | Specification | Remark |
|---|---|---|---|---|
| Output Level | Master Output 1 | Recorded signal by VCI-100MKII | 5.6dBV±0.2dBV | Flter : none |
| THD+N | Master Output 1 | Recorded signal by VCI-100MKII | Less than 0.03% | Flter : "A" |

# VCI-100MKII TEST PROCEDURE (MIDI)

| No. | Description | Example |
|---|---|---|
| 1 | Connect VCI-100MKII to PC. | 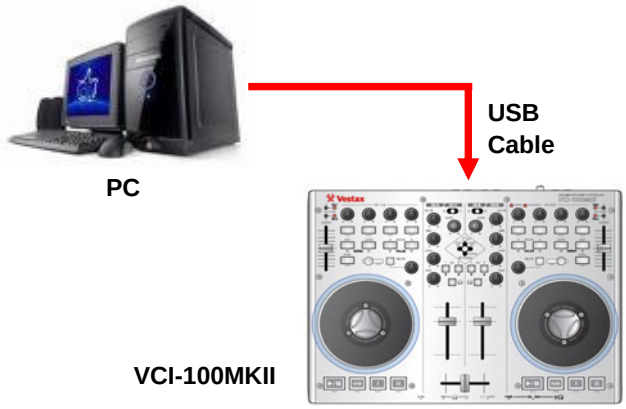 |
| 2 | Double click the Midi device Icon | 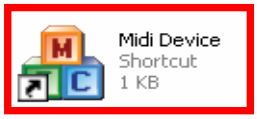 |
| 3 | The Testing Browser will prompt out. | 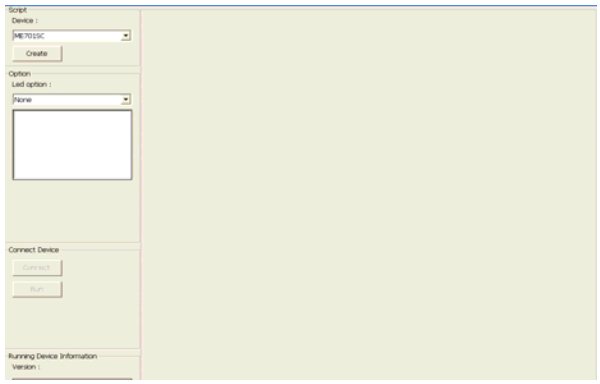 |
| 4 | Choose VCI100MKII - V1.5. | 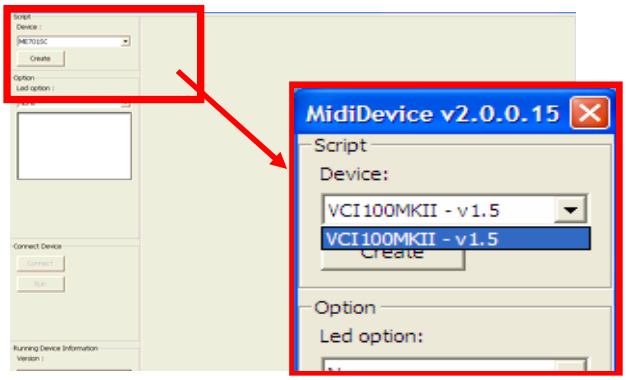 |
| 5 | VCI-100MKII virtual panel will prompt out. Please click "Connect" and wait for few second untill the "Run" button prompt out. Click "Run", VCI-100MKII is ready to use. | 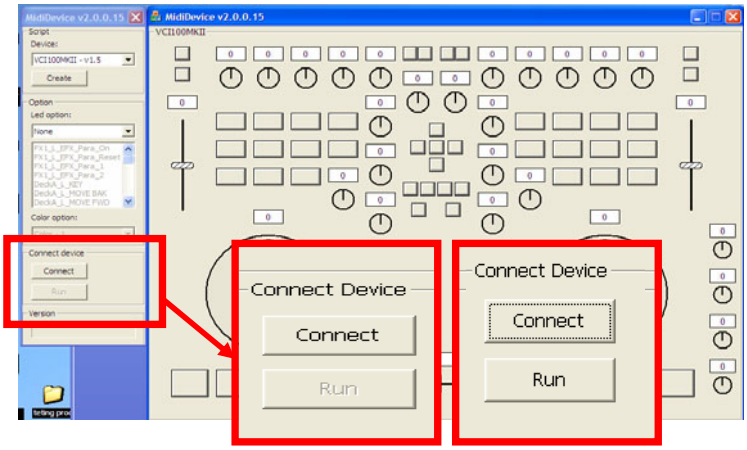 |

# VCI-100MKII TEST PROCEDURE (MIDI)

| No. | Description | Example |
|---|---|---|
| 6 | Press "Run" button, each of the button, jog wheel and VR will become red color. | 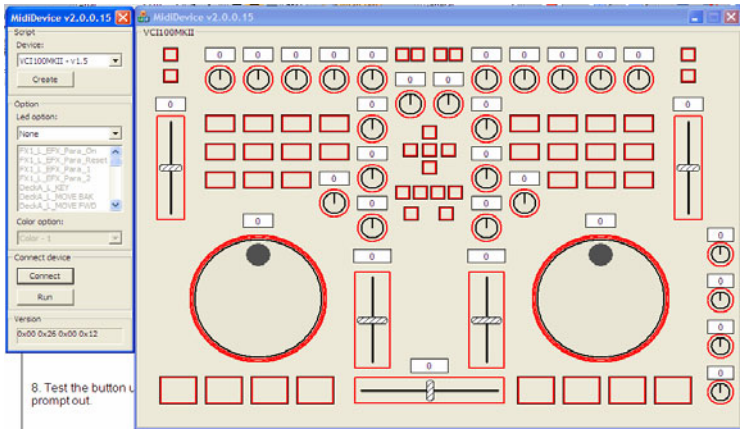 |
| 7 | Start to test VCI-100MKII by press button, scrath Jog wheel, and slide VR. Once the button, jog wheel and VR were tested. The virtual panel button, jog wheel and VR will become blue color.<br><br>Attn: Please test button, jog wheel and VR one by one. | 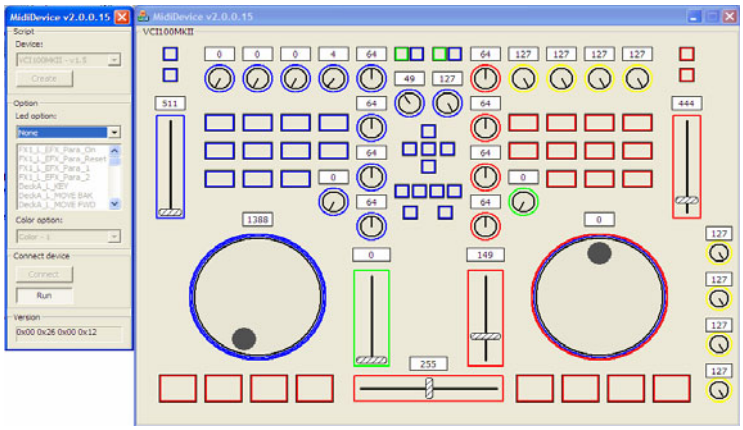 |
| 8 | Test the button untill the "Complete" word prompt out. | 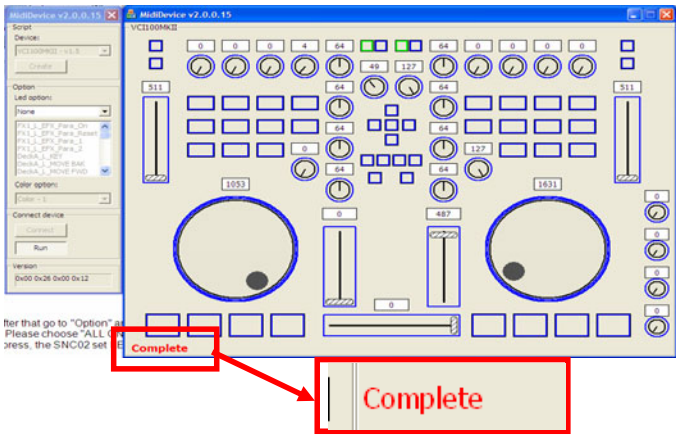 |
| 9 | After that go to "Option" and click on the slide bar. Please choose "ALL ON". Once the button are press, the VCI-100MKII set 1st set of LED will all On. | 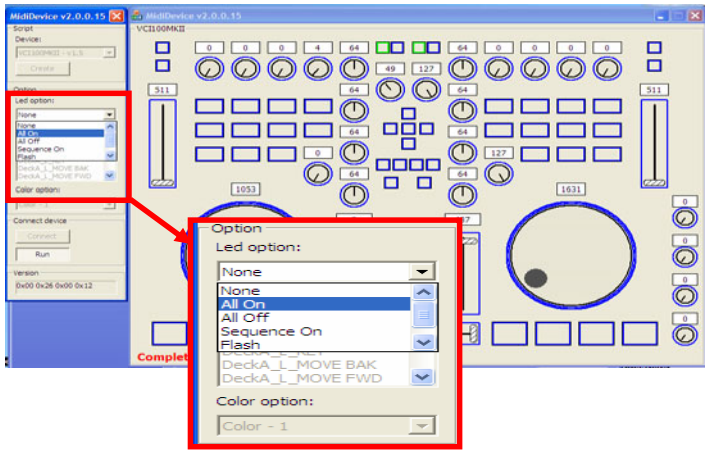 |

# VCI-100MKII TEST PROCEDURE (MIDI)

| No. | Description | Example |
|---|---|---|
| 10 | Go to color option choose "color-2". Press on the "Shift Button" and Hold on then press on the "FX-4 button" . Switch to channel C and channel D. The 2nd set of LED will On.<br><br>**Attn: The LED brigthness is Low.** | 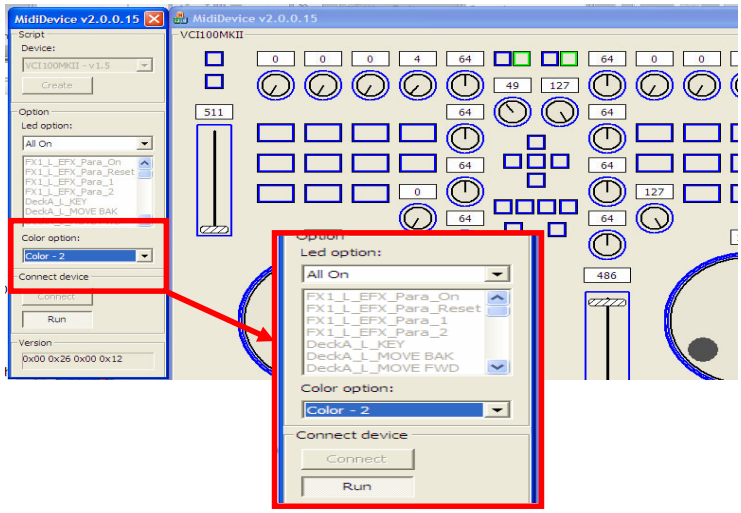 <br> 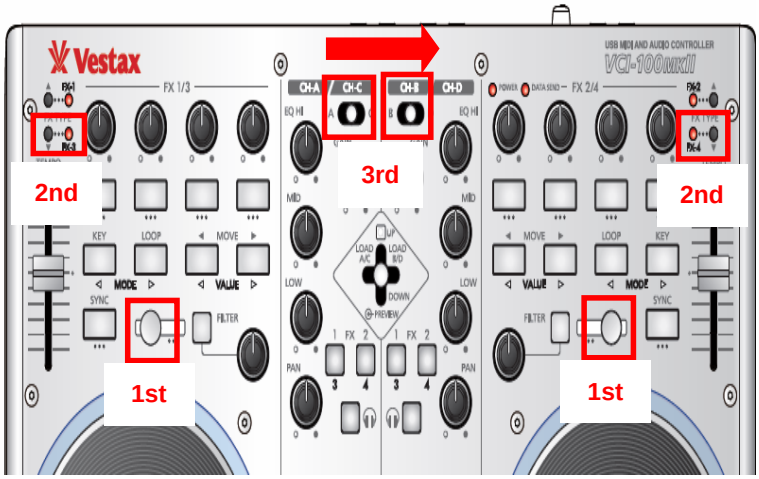 |

# VCI-100MKII TEST PROCEDURE (LabView)

| No. | Description | Example |
|---|---|---|
| 1 | Connect VCI-100MKII to PC and connect master 1/2, input & H/P to PC NI daq<br><br>Attn: Please prepare adaptor 7.5V 1A, heaphone with impedance 34 ohm. | 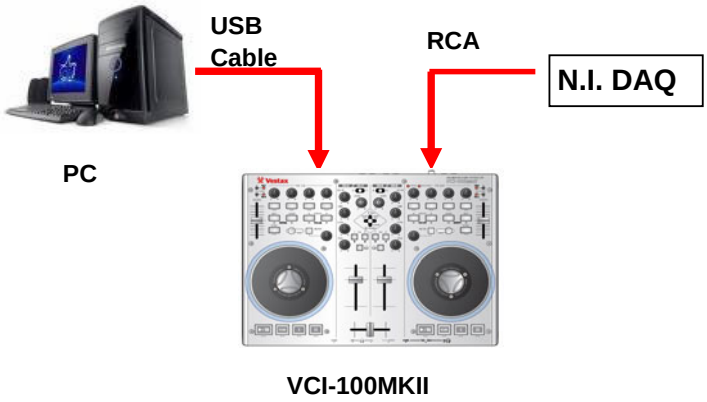 |
| 2 | Double click the N.I. Icon | 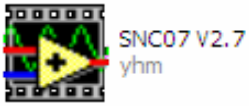 |
| 3 | The Testing Browser will prompt out and please click on the "MASTER 1" Button.<br><br>Follow the instruction below:<br><br>I. Open Mixcraft 4 (VCI-100MKII Sound Card)--Preferences--Default ouput(playback) set to 1/1<br>II. Play the sound<br>III. Press Continue | 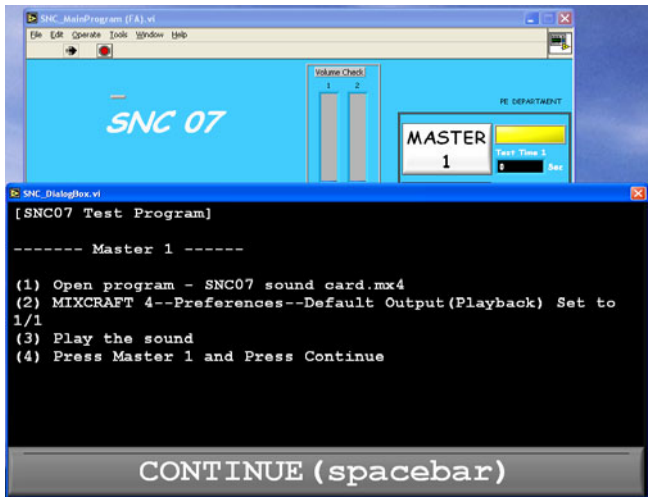 |
| 4 | The Testing Browser will prompt out and please click on the "MASTER 2" Button.<br><br>Follow the instruction below:<br><br>I. Open Mixcraft 4 (VCI-100MKII Sound Card)--Preferences--Default ouput(playback) set to 1/3<br>II. Play the sound<br>III. Press Continue | 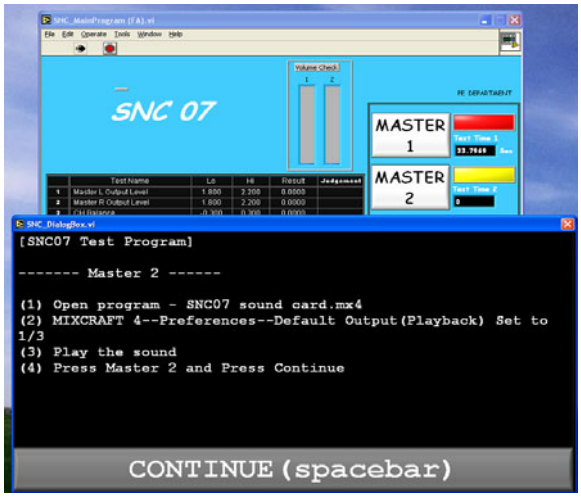 |

# VCI-100MKII TEST PROCEDURE (LabView)

| No. | Description | Example |
|---|---|---|
| 5 | The Testing Browser will prompt out and please click on the "H/P" Button.<br><br>Follow the instruction below:<br><br>I. Open Mixcraft 4(VCI-100MKII Sound Card)--Preferences--Default ouput(playback) set to 1/3<br>II. Turn HP volume to MAX<br>II. Play the sound<br>III. Press Con | 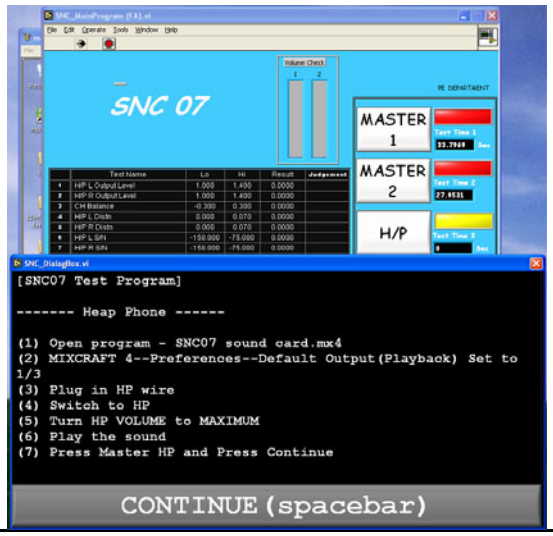 |
| 6 | The Testing Browser will prompt out and please click on the "Record" Button.<br><br>Follow the instruction below:<br><br>I. Open Mixcraft 4 (VCI-100MKII Record)--Preferences--Default ouput(playback) set to 1/3<br>II. Unplug HP Wire<br>II. Turn Record Volume to Max<br>III. Pres | 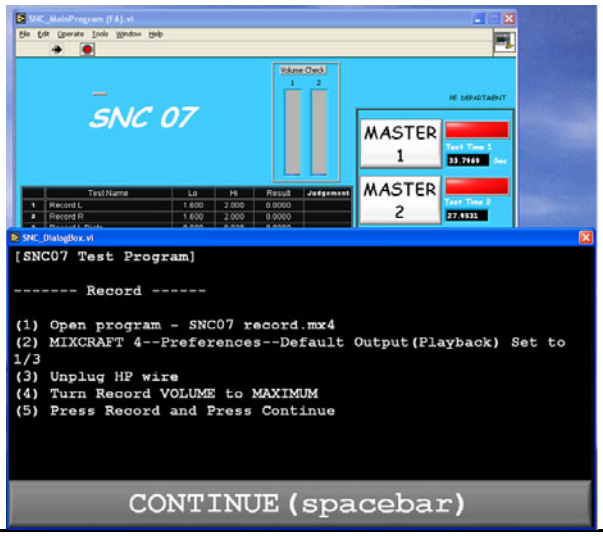 |

# DISASSEMBLY PROCEDURES

1. REMOVAL OF PLASTIC HOLDER OF JOG WHEEL ASS'Y. (Fig. 1)
   (a) Remove 3pcs of screw each side from Plastic Holder of Jog Wheel.

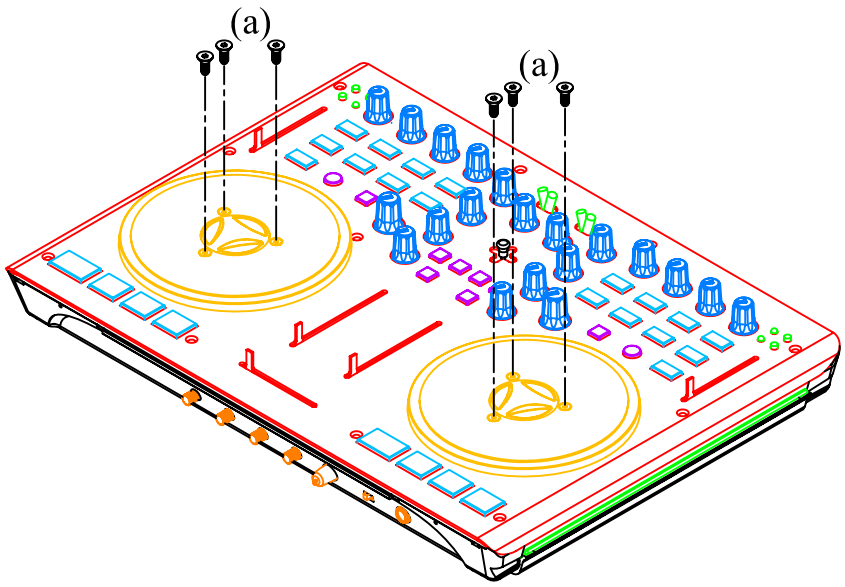


(Fig. 1)

2. REMOVAL OF FRONT PANEL ASS'Y. (Fig. 2)
   (a) Remove 4pcs of knobs from the front panel.
   (b) Unscrew or remove 4pcs of screw from the front panel.
   (c) Remove 10pcs of screw from the front panel.

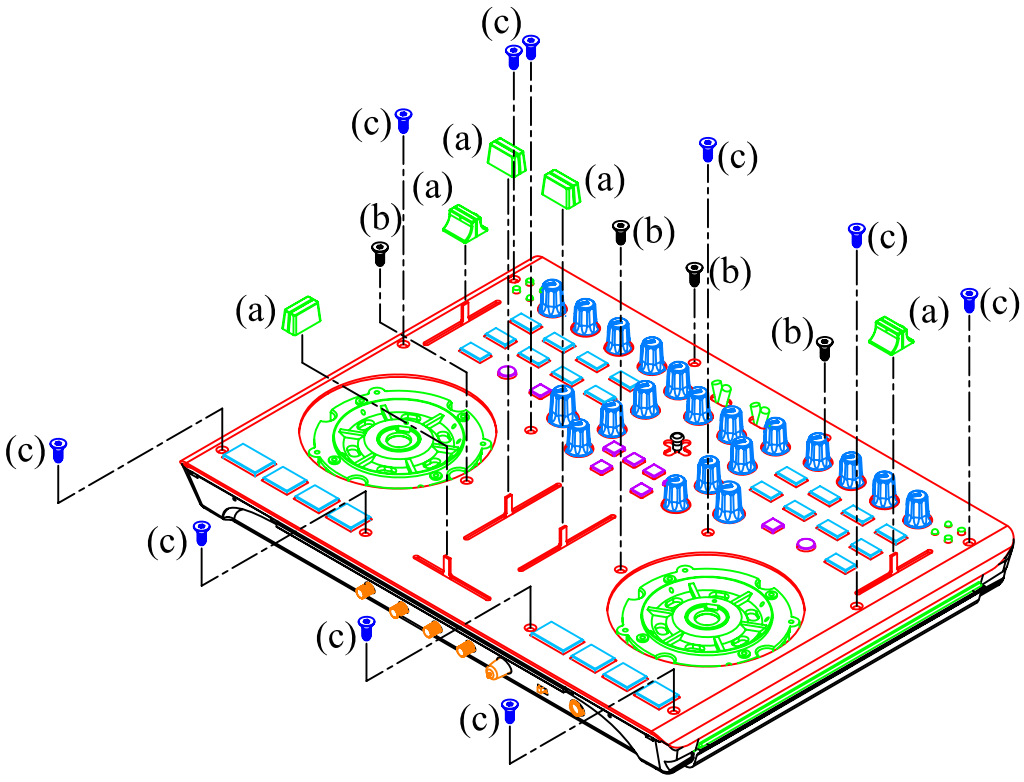


(Fig. 2)

# DISASSEMBLY PROCEDURES

3. REMOVAL OF PCB'S FROM BOTTOM BOARD. (Fig. 3)
   (a) Remove a PCB Ass'y (Controller) from a Bottom Board.
   (b) Unscrew and remove 4pcs of screw from PCB Ass'y (Cross Fader).
   (c) Unscrew and remove 2pcs of screw from PCB Ass'y (Line Fader).

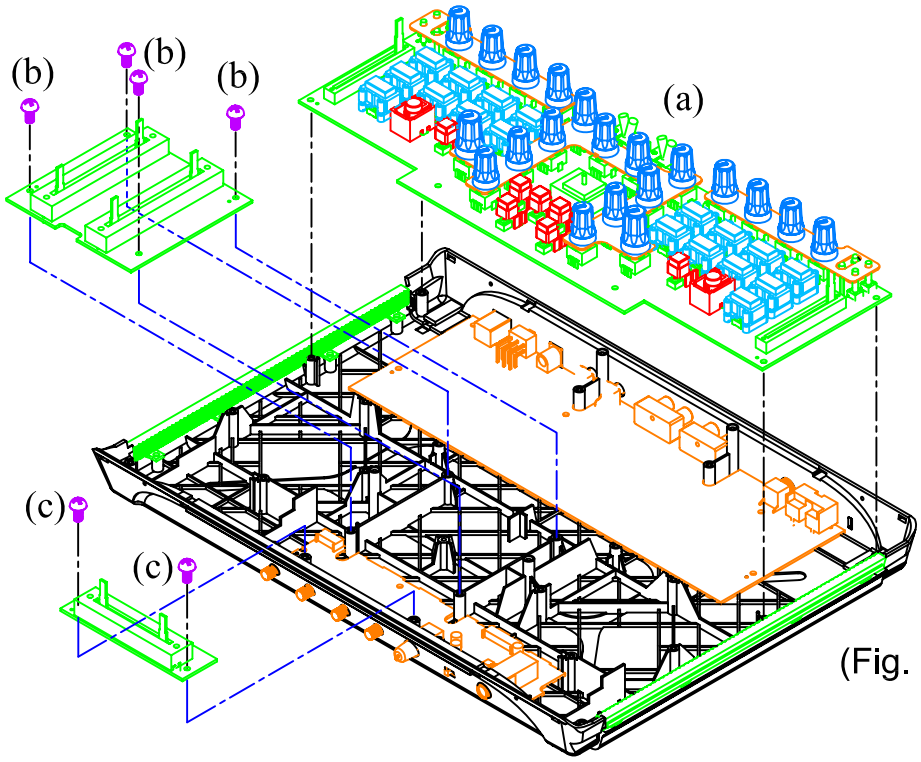


(Fig. 3)

4. REMOVAL OF PCB'S FROM BOTTOM BOARD. (Fig. 4)
   (a) Remove Knob VR (2pcs) from PCB Ass'y (Front Panel & Sound Card)
   (b) Unscrew and remove 5pcs of screw from PCB Ass'y (Sound Card)
   (c) Unscrew and remove 4pcs of screw from PCB Ass'y (Front Panel)

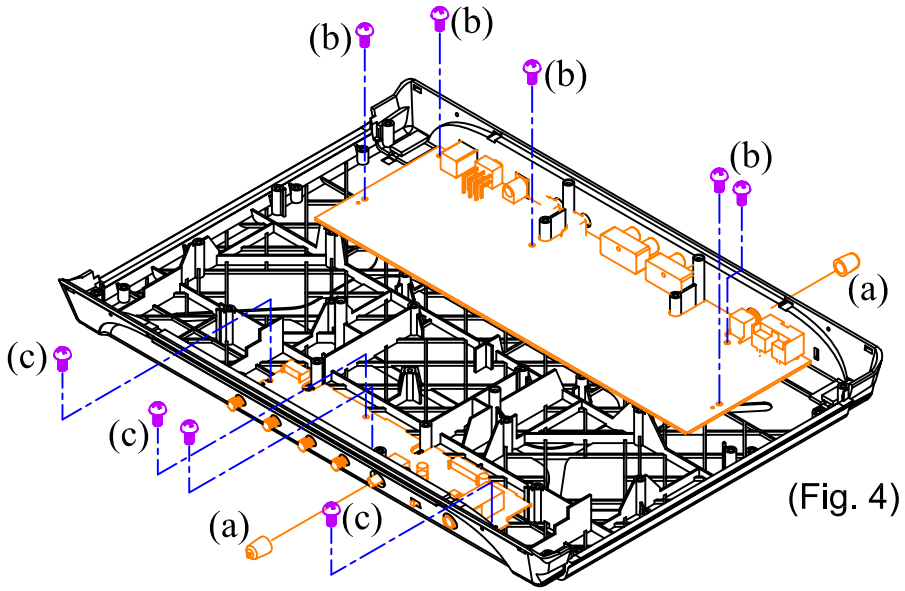


(Fig. 4)

# WIRING DIAGRAM
# MODEL: VCI-100MKII

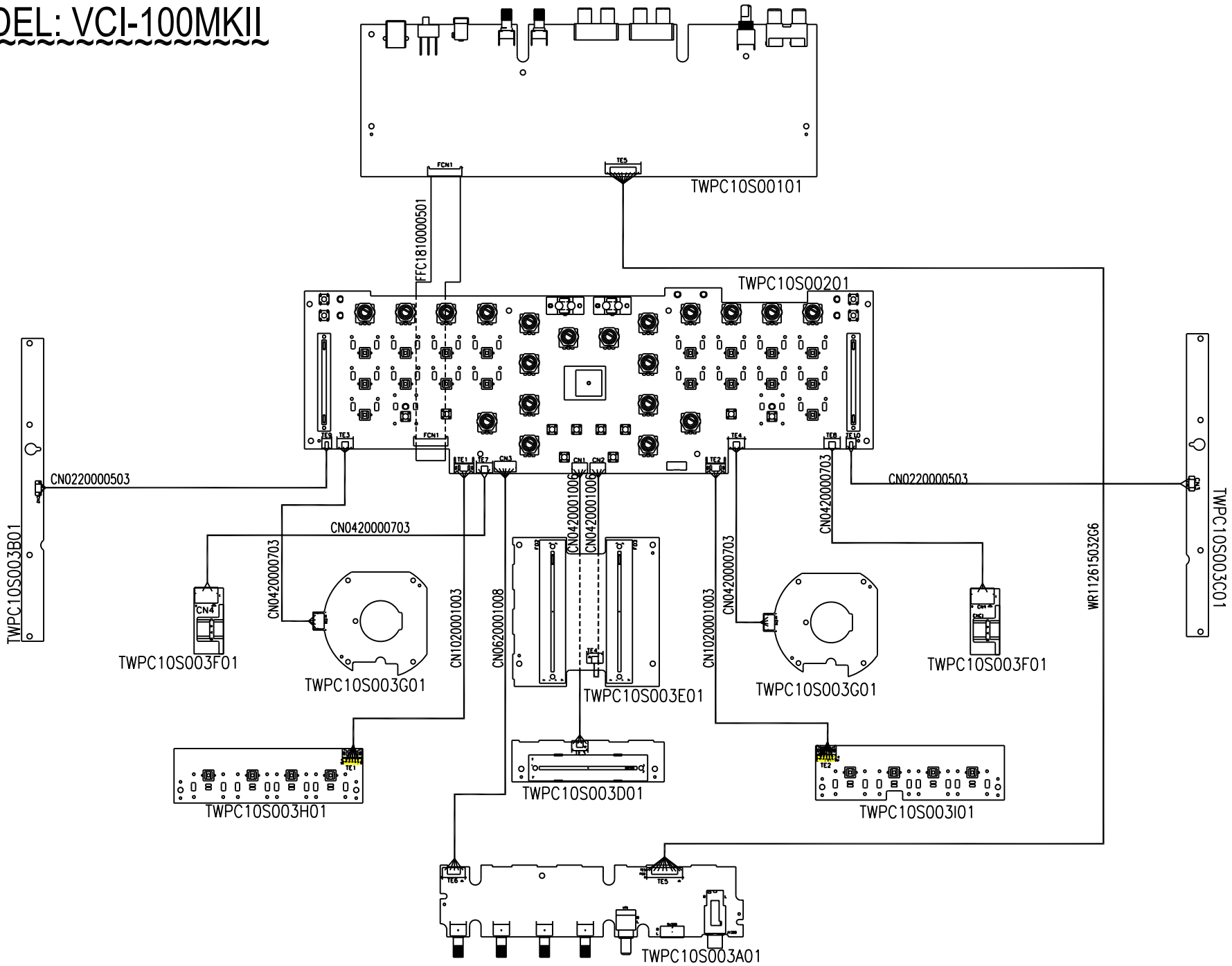

# PACKING DIAGRAM
# MODEL: VCI-100MKII

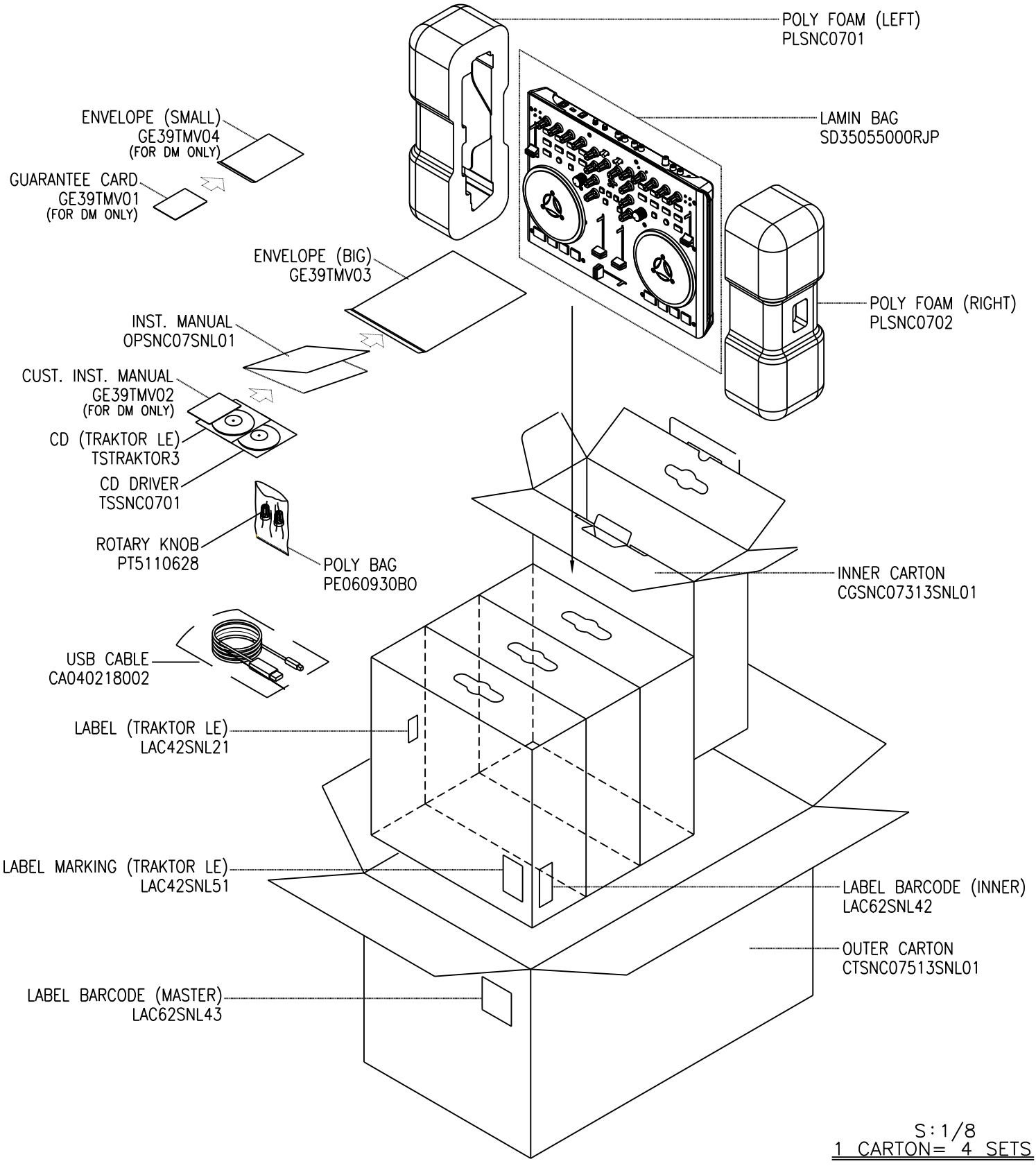


S:1/8

1 CARTON= 4 SETS

# EXPLODED VIEW
# MODEL: VCI-100MKII

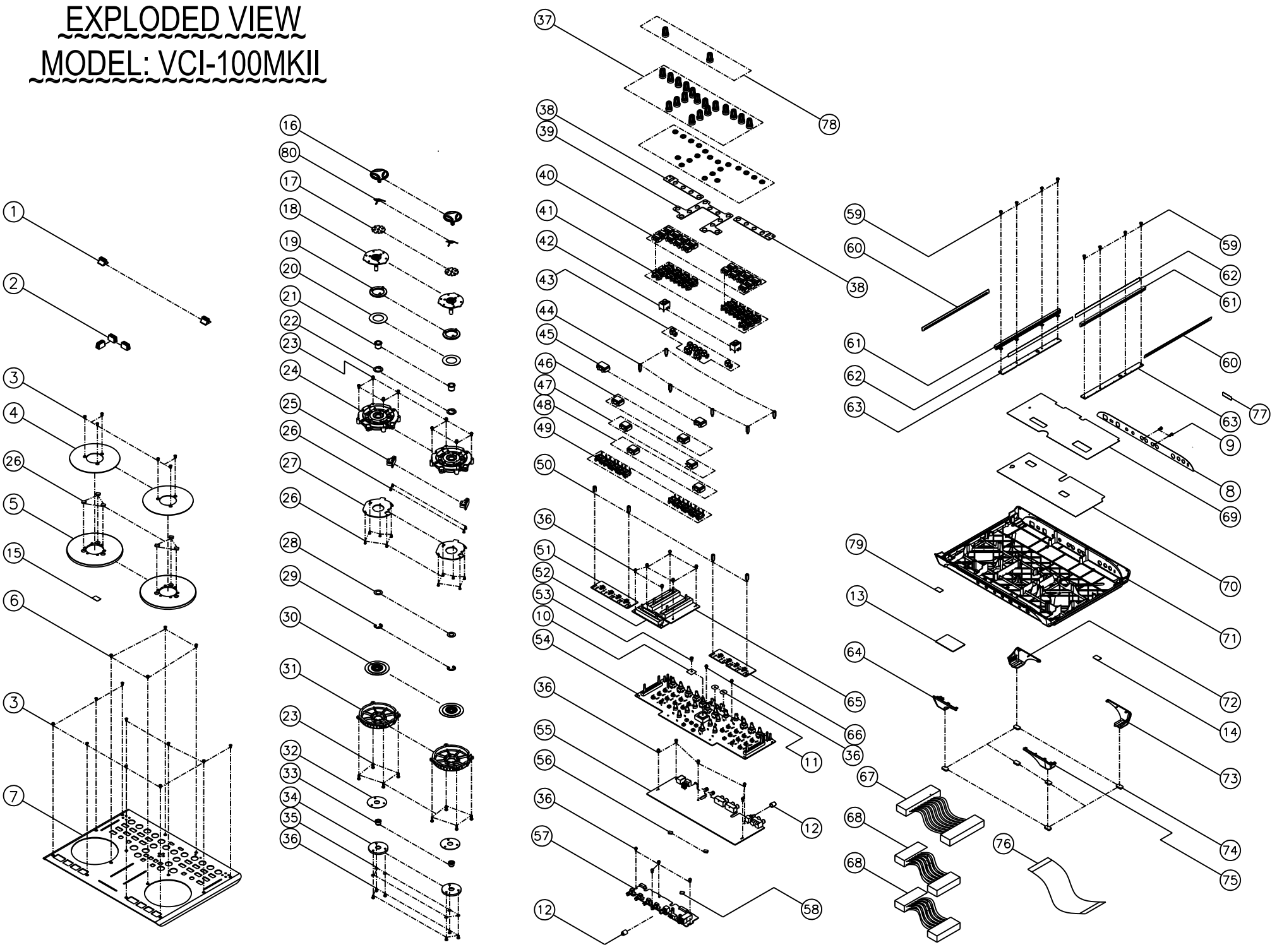

# VCI-100MKII (BOM)

| Lvl | Materials | SPECS | Qty | Part Location |
|---|---|---|---|---|
| .1 | BA244452012MC | FADER KNOB W/MATT CHROME | 3 | 2 |
| .1 | BA244684010 | SLIDER KNOB (2446-8401-0) | 2 | 1 |
| .1 | BAHUB-158B | USB 2.0 HUB BLACK | 1 | |
| .1 | CGSNC07313SNL01 | INNER CARTON | 1 | |
| .1 | CTSNC07513SNL01 | OUTER CARTON | 0.25 | |
| .1 | GE39TMV01 | GUARANTEE CARD | 1 | FOR DM VERSION USE |
| .1 | GE39TMV02 | CUSTOMER INSTRUCTION CARD | 1 | FOR DM VERSION USE |
| .1 | GE39TMV03 | ENVELOPE (BIG) | 1 | |
| .1 | GE39TMV04 | ENVELOPE (SMALL) | 1 | FOR DM VERSION USE |
| .1 | LAC42SNL21 | LABEL (TRAKTOR LE) | 1 | |
| .1 | LAC42SNL51 | LABEL MARKING (TRAKTOR LE) | 1 | |
| .1 | LAC42SNL53 | LABEL (C-TICK) | 1 | 79 |
| .1 | LAC42SNL58 | LABEL (TRAKTOR READY) | 1 | 15 |
| .1 | LAC52SNL44 | LABEL (SAFETY) | 1 | 13 |
| .1 | LAC62SNL30 | LABEL (LICENSE NUMBERS) SNC07 | 1 | 14 |
| .1 | MT510440601 | FIXED PLATE (RING) W/SPRAYING | 2 | 4 |
| .1 | MT513000601 | FRONT PANEL W/SPRAYING & PRINTING | 1 | 7 |
| .1 | NM5106104 | VELVET CARPET (ROUND) | 2 | 11 |
| .1 | NM5106105 | VELVET CARPET (SQUARE) | 1 | 10 |
| .1 | NP251SNL14 | NAME PLATE (REAR PANEL) | 1 | 8 |
| .1 | OPSNC07SNL01 | INSTRUCTION MANUAL | 1 | |
| .1 | PLSNC0701 | POLY FOAM (LEFT) | 1 | |
| .1 | PLSNC0702 | POLY FOAM (RIGHT) | 1 | |
| .1 | PT5104409 | PLASTIC HOLDER (JOG WHEEL) | 2 | 5 |
| .1 | PT511063501 | KNOB VR W/SPRAYING | 2 | 12 |
| .1 | SC0308AINI | HEX HEAD SCREW (FLAT) (M3X8MM) | 16 | 3 |
| .1 | SC0308F2BNI | SCREW (3X8MM) TAPPING | 4 | 6 |
| .1 | SC0308PBBI | SCREW | 2 | 9 |
| .1 | SD35055000RJP | LAMIN BAG | 1 | |
| .1 | SPSASAW0502000E | SWITCH POWER ADAPTOR TYPE DC 5V 2A EU | 1 | FOR EC VERSION USE |
| .1 | SPSASAW0502000 | SWITCH POWER ADAPTOR TYPE DC 5V 2A UL | 1 | FOR US & DM VERSION USE |
| .1 | SPSASAW0502000K | SWITCH POWER ADAPTOR TYPE DC 5V 2AUK | 1 | FOR UK VERSION USE |
| .1 | TSSNC0701 | SNC07 CD DRIVER | 1 | |
| .1 | TSTRAKTOR03 | TRAKTOR LE SOFTWARE CD (FOR SNC07) | 1 | |
| .1 | TWSNC07SNL01 | DIGITAL CONTROLLER ASS'Y | 1 | |
| ..2 | CA040218002 | USB CABLE (BLACK) + CORE | 1 | |
| ..2 | CN1020001003 | CONNECTOR WIRE 5P*2/2.0/100MM | 2 | 68 |
| ..2 | FFC1810000501 | FFC CABLE 18P 1.0MM 50MM | 1 | 76 |
| ..2 | LAC22SNL29 | LABEL (SERIAL NO.) | 1 | 77 |
| ..2 | LAC62SNL42 | LABEL BARCODE (INNER) | 1 | |
| ..2 | LAC62SNL43 | LABEL BARCODE (MASTER) | 1 | |
| ..2 | MT5101801 | GROUNDING PLATE | 2 | 22 |
| ..2 | MT5101803 | METAL PLATE | 2 | 17 |
| ..2 | MT5101804 | METAL HOLDER | 2 | 80 |
| ..2 | MT5104412 | FIXED PLATE | 2 | 38 |
| ..2 | MT5104413 | FIXED PLATE | 1 | 39 |
| ..2 | MT5105507 | COPPER STUD | 4 | 50 |
| ..2 | MT5105508 | COPPER STUD | 6 | 44 |
| ..2 | MT5105509 | SHAFT HOLDER | 2 | 21 |
| ..2 | MT5105511 | SHAFT HOLDER | 2 | 33 |
| ..2 | MT5110602 | STICK KNOB | 1 | 53 |
| ..2 | NM5110607 | VELVET CARPET | 2 | 32 |
| ..2 | NP251SNL12 | NAME PLATE (GASKET) | 2 | 20 |
| ..2 | NP251SNL18 | NAME PLATE (LIGHT SHADE) | 2 | 60 |
| ..2 | NP251SNL21 | NAME PLATE (INSULATOR) | 1 | 69 |
| ..2 | NP351SNL20 | ALUMINIUM FOIL | 1 | 70 |
| ..2 | NP351SNL22 | ALUMINIUM FOIL | 2 | 62 |
| ..2 | PE060930BO | POLYBAG (0.0005 KG/PCS)-1900 PCS/KG | 0.001 | |
| ..2 | PT5104301 | PLASTIC PLATE | 2 | 19 |
| ..2 | PT510440801 | PLASTIC HOLDER W/SPRAYING | 2 | 16 |
| ..2 | PT5104410 | HOLDER | 2 | 24 |
| ..2 | PT5104411 | PLASTIC HOLDER (SUPPORT) | 2 | 34 |

| Lvl | Materials | SPECS | Qty | Part Location |
|---|---|---|---|---|
| ..2 | PT510441201 | PLASTIC HOLDER (LEFT FRONT) W/SPRAYING | 1 | 64 |
| ..2 | PT510441301 | PLASTIC HOLDER (LEFT REAR) W/SPRAYING | 1 | 72 |
| ..2 | PT510441401 | PLASTIC HOLDER (RIGHT FRONT) W/SPRAYING | 1 | 75 |
| ..2 | PT510441501 | PLASTIC HOLDER (RIGHT REAR) W/SPRAYING | 1 | 73 |
| ..2 | PT5110617 | 8MM ANGULAR TAKT SWITCH KNOB | 8 | 43 |
| ..2 | PT5110621 | BUTTON (ROUND) | 2 | 42 |
| ..2 | PT5110622 | LED HOLDER | 2 | 61 |
| ..2 | PT5110628 | KNOB (VR) | 4 | 78 |
| ..2 | PT5110630 | BUTTON GUIDE | 8 | 49 |
| ..2 | PT5110631 | BUTTON (15*8MM) | 18 | 40 |
| ..2 | PT511063201 | BUTTON (CUE) | 2 | 46 |
| ..2 | PT511063202 | BUTTON (I) | 2 | 47 |
| ..2 | PT511063203 | BUTTON (II) | 2 | 48 |
| ..2 | PT511063301 | BUTTON W/PRINTING | 2 | 45 |
| ..2 | PT5110634 | BUTTON GUIDE | 18 | 41 |
| ..2 | PT511063601 | ROTARY KNOB (BLACK & WHITE LINE) | 18 | 37 |
| ..2 | PT5130302 | BOTTOM BOARD (JOG WHEEL) SNC07 | 2 | 31 |
| ..2 | PT513030301 | BOTTOM BOARD | 1 | 71 |
| ...3 | PT5130303 | BOTTOM BOARD | 1 | |
| ..2 | PU0070070008 | CONDUCTIVE FOAM | 1 | 58 |
| ..2 | PU007007004 | CONDUCTIVE FOAM | 8 | 56 |
| ..2 | RN109111 | E RING(9MM) | 2 | 29 |
| ..2 | RU5104401 | RUBBER FOOT | 6 | 74 |
| ..2 | SC0306PBBI | SCREW | 23 | 36 |
| ..2 | SC0308PBBI | SCREW | 8 | 59 |
| ..2 | SC0310RBNI | SCREW-RoHS | 16 | 23 |
| ..2 | SC2605RBNI | SCREW | 14 | 26 |
| **..2** | **TWMT5105505** | **JOG WHEEL ASS'Y** | **2** | **18** |
| ...3 | MT5104407 | METAL HOLDER | 1 | |
| ...3 | MT5105505 | METAL SHAFT (JOG WHEEL) | 1 | |
| ...3 | MT5105506 | SHAFT HOLDER | 1 | |
| **..2** | **TWNP651SNL13** | **SHADER SHEET ASS'Y** | **2** | **30** |
| ...3 | MT0704473 | SHADER FIXED PLATE | 2 | |
| ...3 | MT5104408 | HOLDER (METAL) | 1 | |
| ...3 | NP651SNL13 | SHADER SHEET | 1 | |
| ...3 | RN0416001 | 16MM CS RING | 1 | |
| ...3 | SC0303SIBI | SCREW | 1 | |
| **..2** | **TWPC10S00101** | **PCB ASS'Y SOUND CARD** | **1** | **55** |
| ...3 | AL2-51-0140 | DIODE POWER SCHOTTKY MBRS140LT3 40V 1A | 2 | ZD903, 904 |
| ...3 | AL2-61-7223 | IC REG VOLTAGE NJU7223DL1-33 3.3V TO-252 | 2 | IC902, 903 |
| ...3 | AL2-71-0074 | IC MC33079 QUAD-OP-AMP SOP-14 (TL074) | 2 | IC701, 703 |
| ...3 | AL2-75-4344 | IC CONVERTER D/A CS4344 24BIT 192KHZ (12S) TSSOP10 | 2 | IC700, 702 |
| ...3 | CS100J5003NPO | C. CAP. SMD 10 PF 50V 5% 0603 NPO | 2 | C203, 204 |
| ...3 | CS101J5003NPO | CHIP CAPACITOR SMD 100P/50V ±5% 0603 NPO-ROHS | 6 | C401, 706, 707, 716, 717, 911 |
| ...3 | CS102K5003X7R | CHIP CAP 1000PF/50V,X7R,+/-10%, SMD 0603 | 7 | C201, 202, 402, 708, 709, 718, 719 |
| ...3 | CS103K5003X7R | C.CAP 0.010UF 50V X7R,±10% SMD 0603 | 2 | C210, 211 |
| ...3 | CS104K5003X7R | CHIP CAP 0.1UF/50V,X7R,+/-10%, SMD 0603 | 33 | C205~209, 405, 410~417, 700~703, C710~713, 901~907, 913~916 |
| ...3 | CS270J5003NPO | CHIP CAP 27PF/50V NPO ±5% SMT 0603 | 2 | C408, 409 |
| ...3 | CS300J5003NPO | CHIP CAPACITOR 30PF, NPO, +/-5%, 50V | 2 | C403, 404 |
| ...3 | CS332J5003X7R | C.CAP 3300PF/50V,X7R,+/-5%,SMD 0603 | 4 | C704, 705, 714, 715 |
| ...3 | CS471J5003NPO | C. CAP. SMD 470 pF 50V 5% 0603 NPO | 1 | C910 |
| ...3 | CS472K5003X7R | CHIP CAP 4.7NF 50V 10% 0603 X7R | 2 | C406, 407 |
| ...3 | CS473K5003X7R | C.CAP 0.047UF 50V X7R 0603 | 1 | C720 |
| ...3 | DI1SS352SM | DIODE 1SS352 HE1A | 4 | D700~703 |
| ...3 | DIEN1N4148WSM | DIODE FAST SWICTHING 1N4848W SOD-123 | 2 | D801, 802 |
| ...3 | DISR26 | SCHOTTKY BARRIER RECTIFIER SMD | 2 | ZD905, 909 |
| ...3 | ECS10625B | E.CAPACITOR 10UF/25V SMD-B | 16 | EC203~205, 700~711, 910 |
| ...3 | ECS10625CL | E.CAP 10UF/25V C TYPE SMD LOW LEAKAGE | 1 | EC801 |
| ...3 | ECS10725D8 | E.CAP 100UF/25V 6.3*7.7MM SMD | 3 | EC901, 912, 914 |
| ...3 | ECS10725FLE | E.CAP 100UF/25V F TYPESMD LOW ESR | 3 | EC902, 909, 911 |
| ...3 | ECS22725F | E.CAP 220UF/25V F TYPE SMD | 1 | EC802 |
| ...3 | ECS47450B | E.CAP 0.47UF/50V 4*5.3MM SMD | 2 | EC201, 202 |
| ...3 | ECS47550B | E.CAP 4.7UF/50V 4*5.3MM SMD | 4 | EC903~905, 907 |

| Lvl | Materials | SPECS | Qty | Part Location |
|---|---|---|---|---|
| ...3 | ECS47625D | E.CAP 47UF/25V D TYPE SMD | 5 | EC712~715, 908 |
| ...3 | FCN2R1001802 | 18P FFC CONNECTOR 1.0MM 90° DUAL CONTACT | 1 | FCN1 |
| ...3 | IC74AHC1G125GW | IC 74AHC1G125G SOT353 | 1 | IC908 |
| ...3 | IC7805 | IC (AN7805) JRC | 1 | IC901 |
| ...3 | ICAIC1528N-0G | IC AIC1528N-0G SOP8 | 1 | IC905 |
| ...3 | ICBA4558F | IC (4558) SMD | 1 | IC201 |
| ...3 | ICG696L293T1UF | IC RESET | 1 | IC403 |
| ...3 | ICLP2985-50DBVR | IC LP2985-50DBVR SOT23-5 | 1 | IC203 |
| ...3 | ICMC34063ADR | IC MC34063ADR SOIC8 (ALTERNATIVE: AL2-61-3463) | 2 | IC904, 906 |
| ...3 | ICPCM1808PWR | IC PCM1808PWR | 1 | IC202 |
| ...3 | ICTC4053BFT | IC TC4053BFT TSSOP16 | 1 | IC909 |
| ...3 | ICTUSB3200 | IC TUSB3200ACPAH TQFP | 1 | IC401 |
| ...3 | ICYHFRS006 | IC WITH PROGRAME | 1 | IC402 |
| ....4 | IC24LC64TIMI | IC (64K SERIAL EEPROM) SOP 150MIL | 1 | |
| ...3 | JK4690-DR30-04F | USB2.0 B-TYPE 90 | 1 | JK901 |
| ...3 | JKDJ-0702B-020 | DC SOCKET 2.0MM | 1 | JK902 |
| ...3 | NUT0103INI | NUT (3M/M)- ROHS | 1 | (IC901) |
| ...3 | PC10S001 | PCB SOUND CARD DOUBLE LAYER FR-4 280*100MM | 1 | |
| ...3 | RJ1039-10-0580B | RCA 2P WHITE/RED GOLD PLATED | 1 | JK201 |
| ...3 | RJ208PKB015A0AG | RCA JACK 2P WHITE/RED GOLD 90DEG | 2 | JK700, 701 |
| ...3 | RS000004J06 | CHIP RES. 0 Ω 5% SMD 1206 | 4 | R906, 951, ZD901, 902 |
| ...3 | RS000010J03 | CHIP RES. 0 Ω 5% SMD 0603 | 8 | R409, 410, 413~416, 430, 432 |
| ...3 | RS001010F03 | CHIP RES. 10 Ω 1% SMD 0603 | 1 | R431 |
| ...3 | RS001K10F03 | CHIP RES. 1K Ω 1% SMD 0603 | 7 | R215, 216, 720, 721, 742~744, 903, 913 |
| ...3 | RS002K10F03 | CHIP RES. 2K Ω 1% SMD 0603 | 2 | R207, 208 |
| ...3 | RS003K10F03 | CHIP RES. 3K Ω 1% SMD 0603 | 4 | R745~748 |
| ...3 | RS00R504F06 | CHIP RES.0.5 O 1% SMD 1206 | 1 | R916 |
| ...3 | RS010010F03 | CHIP RES. 100 Ω 1% SMD 0603 | 21 | R209~212, 411, 412, 434~436, 700~703, R718, 719, 722~725, 740, 741 |
| ...3 | RS010K10F03 | CHIP RES. 10K Ω 1% SMD 0603 | 7 | R205, 206, 429, 907, 924, 925, 950 |
| ...3 | RS015010F03 | CHIP RES. 150 Ω 1% SMD 0603 | 1 | R437 |
| ...3 | RS018010F03 | CHIP RES. 180 Ω 1% SMD 0603 | 1 | R915 |
| ...3 | RS01K110F03 | CHIP RES.1.1K O 5% SMD 0603 | 1 | R904 |
| ...3 | RS01K510F03 | CHIP RES. 1.5K Ω 1% SMD 0603 | 1 | R405 |
| ...3 | RS022K10F03 | CHIP RES. 22K Ω 1% SMD 0603 | 3 | R203, 204, 908 |
| ...3 | RS02K210F03 | CHIP RES. 2.2K Ω 1% SMD 0603 | 3 | R201, 202, 912 |
| ...3 | RS03K310F03 | CHIP RES. 3.3K Ω 1% SMD 0603 | 1 | R902 |
| ...3 | RS03K910F03 | CHIP RES. 3.9K Ω 1% SMD 0603 | 1 | R914 |
| ...3 | RS047K10F03 | CHIP RES. 47K Ω 1% SMD 0603 | 17 | R710~717, 732~739, 909 |
| ...3 | RS04R704J06 | CHIP RES. 4.7 OHM,1/4W,+/-5%,1206 | 1 | R901 |
| ...3 | RS0R7504F06 | CHIP RES. 0.75Ω 1% SMD 1206 | 1 | R911 |
| ...3 | RS100K08F05 | CHIP RES. 100K 1% SMD 0805 -ROHS | 1 | R213 |
| ...3 | RS10K710F03 | CHIP RES. 10.7K OHM,1/10W,?%,0603 | 4 | R708, 709, 730, 731 |
| ...3 | RS27R410F03 | CHIP RES. 27.4 Ω 1% SMD 0603 | 2 | R406, 407 |
| ...3 | RS3K0910F03 | CHIP RES. 3.09K Ω 1% SMD 0603 | 1 | R401 |
| ...3 | RS3K2410F03 | CHIP RES. 3.24K Ω 1% SMD 0603 | 4 | R704, 705, 726, 727 |
| ...3 | RS4K9910F03 | CHIP RES. 4.99K Ω 1% SMD 0603 | 2 | R427, 428 |
| ...3 | RS560K10F03 | CHIP RES. 560K Ω 1% SMD 0603 | 2 | R801, 802 |
| ...3 | RS5K3610F03 | CHIP RES. 5.36K Ω 1% SMD 0603 | 4 | R706, 707, 728, 729 |
| ...3 | SC0308RINI | SCREW | 1 | (IC901) |
| ...3 | SW5MD3S12AM6QES | SLIDE SWITCH 2P3T | 1 | SW901 |
| ...3 | TE622001001 | 10P CONNECTOR SOCKET | 1 | TE5 |
| ...3 | TR2SA1037ASM | TRANSISTOR 608 SMD | 1 | Q801 |
| ...3 | TR2SD2114KSM | TRANSISTOR NPN 2SD2114K SOT-23 (SMD) | 4 | Q700~703 |
| ...3 | TRC4116GR | TRANSISTOR 2SC4116GR SC-70 | 1 | Q902 |
| ...3 | TRDTC114YUA | TRANSISTOR DTC114YUA | 1 | Q901 |
| ...3 | TRK880GR | TRANSISTOR 2SK880GR SC-70 | 4 | Q704~707 |
| ...3 | UH465516-351 | COIL | 1 | L1 |
| ...3 | UHELL6SH220M | INDUCTOR22UH 0.9A SMD PANASONIC | 3 | L3, 4, 6 |
| ...3 | UHPIC1207-221M | COIL SMD 220UH | 1 | L2 |
| ...3 | VRR10302011 | RK09K1110-K20-C0-B103 （LM1=20 10KB） | 2 | VR101, 102 |
| ...3 | VRR50301502 | VARIABLE RESISTOR ROTARY 50KA*2 15MM | 1 | VR201 |
| ...3 | XTM06000X3 | CRYSTAL 6MHZ(49US)-ROHS | 1 | X401 |
| **..2** | **TWPC10S00201** | **PCB ASS'Y CONTROLLER** | **1** | |

| Lvl | Materials | SPECS | Qty | Part Location |
|---|---|---|---|---|
| ...3 | AL2-51-4401 | TRANS NPN 2N4401 40V 1A SOT-23 | 13 | Q106~118 |
| ...3 | AL2-51-4403 | TRANSISTOR PNP 2N4403 40V 800MA SOT-23 | 6 | Q100~105 |
| ...3 | AL2-61-7223 | IC REG VOLTAGE NJU7223DL1-33 3.3V TO-252 | 1 | IC202 |
| ...3 | BALE48211-0A | LED HOLDER | 6 | LD17, 21, 26, 32, 100, 200 |
| ...3 | CN0420001006 | CONNECTOR WIRE 4P/2.0/100MM | 1 | CN2 |
| ...3 | CN0420001504 | 4P CONNECTOR WIRE 150MM PITCH 2.0MM | 1 | CN1 |
| ...3 | CN0620001008 | CONNECTOR WIRE 6P/2.0/100MM | 1 | CN3 |
| ...3 | CS104K5003X7R | CHIP CAP 0.1UF/50V,X7R,+/-10%, SMD 0603 | 50 | C100~102, 200~203, 206~209, 211, 212, C214~221, 400~404, 500~508, 510, 511, C515~522, 528~532 |
| ...3 | CS150J5003NPO | CHIP CAP.15PF ,SMD0603,+/-5 %, 50V, NPO | 2 | C204, 205 |
| ...3 | DI1SS302SM | DIODE 1SS302 SC-70 | 2 | D402, 403 |
| ...3 | DI1SS352SM | DIODE 1SS352 HE1A | 2 | D400, 401 |
| ...3 | DIEN1N4148WSM | DIODE FAST SWICTHING 1N4848W SOD-123 | 38 | D200, 205~210, 212~214, 216~221, D224~226, 229, 232~234, 236, 238~240, D242~245, 247~253 |
| ...3 | ECS10625CLE | E.CAP 10UF/25V LOW ESR 5*5.7MM SMD | 1 | EC200 |
| ...3 | ECS47616D | E.CAP 47UF/16V DTYPE SMD | 2 | C210, 213 |
| ...3 | FCN2R1001802 | 18P FFC CONNECTOR 1.0MM 90° DUAL CONTACT | 1 | FCN1 |
| ...3 | IC74AHC1G125GW | IC 74AHC1G125G SOT353 | 2 | IC203, 500 |
| ...3 | IC74AHCT541PWR | OCTAL BUFFER/DRIVER W/TRI-STATE OUTS TSSOP-20 74AH | 3 | IC101, 102, 201 |
| ...3 | IC74HCT04D | IC 74HCT04D SO14 | 2 | IC100, 200 |
| ...3 | IC74LVC14 | IC LOGIC 74LVC14 SOP-14-DR99 | 1 | IC204 |
| ...3 | ICLM358M | IC LM358M DUAL OPA SOP-8 | 1 | IC400 |
| ...3 | ICTC4051BFN | IC TC4051BFN SOP16 | 1 | IC504 |
| ...3 | ICYH99S01 | IC PROGRAME SNC07 | 1 | U200 |
| ....4 | ICP24HJ128GP210 | IC PIC24HJ128GP210 TQFP100 | 1 | |
| ...3 | LD1030 | LED 3MM (YELLOW) | 2 | LD21, 26 |
| ...3 | LDC191TBKT-5A | LED BLUE SMD 0603 | 8 | LD20, 22, 23, 24, 27, 30, 31, 49 |
| ...3 | LDIFR324HD | LED 3MM (RED) | 4 | LD17, 32, 100, 200 |
| ...3 | LDKPT1608SECKKM | LED ORANGE SMD 0603 120DEG | 12 | LD9, 11, 13, 15, 18, 19, 28, 29, 35, 43, 45, LD47 |
| ...3 | LDKPTD-1608CGCK | LED YELLOW GREEN 0603 SMD 60DEG | 10 | LD10, 12, 14, 16, 25, 36, 44, 46, 48, 50 |
| ...3 | LDLTST-C190KRKT | LED RED (3-20-0011) | 8 | LD1, 3, 5, 7, 33, 37, 39, 41 |
| ...3 | LDLTST-C190KSKT | LED (YELLOW) (LDKPT-1608S) | 8 | LD2, 4, 6, 8, 34, 38, 40, 42 |
| ...3 | MT5110602 | STICK KNOB | 1 | |
| ...3 | NM5106105 | VELVET CARPET (SQUARE) | 1 | |
| ...3 | PC10S002 | PCB CONTROLLERDOUBLE LAYER FR-4 350*120MM | 1 | |
| ...3 | RS000010J03 | CHIP RES. 0 Ω 5% SMD 0603 | 11 | R216, 233, 235, 236, 241~245, 400, 509 |
| ...3 | RS001K10F03 | CHIP RES. 1K Ω 1% SMD 0603 | 20 | R100, 113, 127, 143, 159, 172, 185~197, R226 |
| ...3 | RS001M10F03 | CHIP RES. 1M OHM,1/8W,+/-1%,0603 | 5 | R225, 405~408 |
| ...3 | RS010010F03 | CHIP RES. 100 Ω 1% SMD 0603 | 2 | R401, 402 |
| ...3 | RS010K10F03 | CHIP RES. 10K Ω 1% SMD 0603 | 14 | R220, 221, 224, 227, 231, 232, 234, 238, R239, 240, 250~253 |
| ...3 | RS015010F03 | CHIP RES. 150 Ω 1% SMD 0603 | 10 | R115, 117, 119, 121, 129, 161, 175, 177, R179, 181 |
| ...3 | RS018010F03 | CHIP RES. 180 Ω 1% SMD 0603 | 26 | R101~104, 109~112, 114, 116, 118, 120, R128, 144, 145, 160, 162~167, 174, 176, R178, 180 |
| ...3 | RS01K510F03 | CHIP RES. 1.5K Ω 1% SMD 0603 | 2 | R403, 404 |
| ...3 | RS022010F03 | CHIP RES. 220 Ω 1% SMD 0603 | 12 | R132~135, 138, 139, 147~150, 153, 154 |
| ...3 | RS033010F03 | CHIP RES. 330 Ω 1% SMD 0603 | 3 | R126, 131, 146 |
| ...3 | RS04K710F03 | CHIP RES. 4.7K Ω 1% SMD 0603 | 4 | R246~249 |
| ...3 | RS068010F03 | CHIP RES. 680 Ω 1% SMD 0603 | 1 | R230 |
| ...3 | SWEVQ11L05R | TACT SWITCH(5MM) ROUND TERMINAL | 10 | SW206, 211, 215, 220, 225, 230, 234, SW239, 244, 245 |
| ...3 | SWLBC22M-12K | 2 STEP ON/ OFF SWITCH STICK 12MM | 2 | SW201, 202 |
| ...3 | SWRKJXK122400Y | SWITCH RKJXK122400Y | 1 | SW200 |
| ...3 | SWSKHHDHA010 | SWITCH SKHHDHA010 H=17MM/0.98N_TYPE | 4 | SW203, 208, 237, 242 |
| ...3 | SWSKPMAME010 | ON / OFF TACT SWITCH 5MM 1.57N 90DEG | 18 | SW204, 207, 209, 212, 213, 217, 218, SW222, 223, 227, 228, 232, 233, 236, SW238, 241, 243, 246 |
| ...3 | TE10200502 | 5P CONNECTOR SOCKET 180° | 1 | TE6 |

| Lvl | Materials | SPECS | Qty | Part Location |
|---|---|---|---|---|
| ...3 | TE352001001 | 5P*2 CONNECTOR 2.0MM DIP | 2 | TE1, 2 |
| ...3 | TE622000201 | 2P CONNECTOR SOCKET | 2 | TE9, 10 |
| ...3 | TE622000401 | CONNECTOR (4P 90 DEGREE) | 4 | TE3, 4, 7, 8 |
| ...3 | TR2SC2412KSM | TRANSISTOR 536 SMD | 4 | Q201~204 |
| ...3 | VRR10301512 | V.RESISTOR ROTARY 10K 1B SHAFT L:15MM CENTER CLICK | 8 | VR504~507, 516~519 |
| ...3 | VRR10301513 | V.RESISTOR ROTARY:10K 1B SHAFT L:15MM SINGLE CLICK | 12 | VR500~503, 512~515, 520~523 |
| ...3 | VRS10304522 | ROTARY VR 10K2B 45MM 20MM CENTER CLICK | 2 | VR508, 509 |
| ...3 | XTM10000X6 | CRYSTAL 10MHZ - 49US SMD | 1 | X200 |
| **..2** | **TWPC10S00301** | **PCB ASS'Y MULTI** | **1** | |
| ...3 | PC10S003 | PCB MULTI DOUBLE LAYER FR4 247*247MM | 1 | |
| **...3** | **TWPC10S003A01** | **PCB ASS'Y FRONT PANEL** | **1** | |
| ....4 | CS102K5003X7R | CHIP CAP 1000PF/50V,X7R,+/-10%, SMD 0603 | 2 | C300, 301 |
| ....4 | CS104K5003X7R | CHIP CAP 0.1UF/50V,X7R,+/-10%, SMD 0603 | 6 | C304~309 |
| ....4 | ECS10625B | E.CAPACITOR 10UF/25V SMD-B | 2 | EC300, 301 |
| ....4 | ECS47625D | E.CAP 47UF/25V D TYPE SMD | 2 | EC302, 303 |
| ....4 | ICNJM4556AM | IC (NJM4556AM) | 1 | IC301 |
| ....4 | JKHTJ-064-12D | JACK HTJ-064-12D | 1 | JK300 |
| ....4 | MT5104410 | FIXED METAL | 1 | (JK300) |
| ....4 | RS001K10F03 | CHIP RES. 1K Ω 1% SMD 0603 | 2 | R312, 313 |
| ....4 | RS006810F03 | CHIP RES. 68 Ω 1% SMD 0603 | 4 | R308~311 |
| ....4 | RS010K10F03 | CHIP RES. 10K Ω 1% SMD 0603 | 2 | R300, 301 |
| ....4 | RS018K10F03 | CHIP RES. 18K Ω 1% SMD 0603 | 2 | R304, 305 |
| ....4 | RS047K10F03 | CHIP RES. 47K Ω 1% SMD 0603 | 4 | R302, 303, 306, 307 |
| ....4 | SWSKV-22D21 | ON/OFF SLIDE SWITCH 2P 2T | 1 | SW300 |
| ....4 | TE10200602 | 6P CONNECTOR SOCKET 90° | 1 | TE6 |
| ....4 | TE622001001 | 10P CONNECTOR SOCKET | 1 | TE5 |
| ....4 | TR2SD2114KSM | TRANSISTOR NPN 2SD2114K SOT-23 (SMD) | 2 | Q300, 301 |
| ....4 | VRR10302011 | RK09K1110-K20-C0-B103 （LM1=20 10KB） | 4 | VR2~5 |
| ....4 | VRR50301502 | VARIABLE RESISTOR ROTARY 50KA*2 15MM | 1 | VR1 |
| **...3** | **TWPC10S003B01** | **PCB ASS'Y LEFT SIDE** | **1** | |
| ....4 | CN0220000503 | FLAT WIRE 2P/2.0/50MM | 1 | CN2 |
| ....4 | LDC191TBKT-5A | LED BLUE SMD 0603 | 4 | LD21, 23, 25, 27 |
| ....4 | RS01K510F03 | CHIP RES. 1.5K Ω 1% SMD 0603 | 4 | R21, 23, 25, 27 |
| ....4 | TE812000211 | 2P CONNECTOR SOCKET | 1 | (CN2) |
| **...3** | **TWPC10S003C01** | **PCB ASS'Y RIGHT SIDE** | **1** | |
| ....4 | CN0220000503 | FLAT WIRE 2P/2.0/50MM | 1 | CN3 |
| ....4 | LDC191TBKT-5A | LED BLUE SMD 0603 | 4 | LD28, 30, 32, 34 |
| ....4 | RS01K510F03 | CHIP RES. 1.5K Ω 1% SMD 0603 | 4 | R28, 30, 32, 34 |
| ....4 | TE812000211 | 2P CONNECTOR SOCKET | 1 | (CN2) |
| **...3** | **TWPC10S003D01** | **PCB ASS'Y CROSS FADER** | **1** | |
| ....4 | CS104K5005X7R | CHIP CAP 0.1UF ±10% 50V 0805 | 1 | C1 |
| ....4 | TE622000401 | CONNECTOR (4P 90 DEGREE) | 1 | TE3 |
| ....4 | VRS10304516 | V.RESISTOR 10K 45MM 15MM | 1 | FD1 |
| **...3** | **TWPC10S003E01** | **PCB ASS'Y LINE FADER** | **1** | |
| ....4 | CS104K5005X7R | CHIP CAP 0.1UF ±10% 50V 0805 | 2 | C2, 3 |
| ....4 | TE622000401 | CONNECTOR (4P 90 DEGREE) | 1 | TE4 |
| ....4 | VRS10306016 | V. RESISTOR 10K 2B 60MM 15MM SINGLE | 2 | FD2, 3 |
| **...3** | **TWPC10S003F01** | **PCB ASS'Y SENSOR** | **2** | |
| ....4 | CN0420000703 | 4P CONNECTOR WIRE 70MM | 1 | CN4 |
| ....4 | DIHEDS-9700F50 | SMALL OPTICAL ENCODER MODULES DR40 | 1 | ENC1 |
| **...3** | **TWPC10S003G01** | **PCB ASS'Y TOUCH WHEEL** | **2** | |
| ....4 | CN0420000703 | 4P CONNECTOR WIRE 70MM | 1 | CN1 |
| ....4 | LDC191TBKT-5A | LED BLUE SMD 0603 | 2 | LD18, 20 |
| ....4 | LDLTST-C190KRKT | LED RED (3-20-0011) | 2 | LD17, 19 |
| ....4 | RS015010F03 | CHIP RES. 150 Ω 1% SMD 0603 | 4 | R17~20 |
| **...3** | **TWPC10S003H01** | **PCB ASS'Y LEFT SIDE SWITCH** | **1** | |
| ....4 | DIEN1N4148WSM | DIODE FAST SWICTHING 1N4848W SOD-123 | 4 | D1~4 |
| ....4 | LDC191TBKT-5A | LED BLUE SMD 0603 | 4 | LD1, 3, 5, 7 |
| ....4 | LDKPTD-1608CGCK | LED YELLOW GREEN 0603 SMD 60DEG | 4 | LD2, 4, 6, 8 |
| ....4 | RS015010F03 | CHIP RES. 150 Ω 1% SMD 0603 | 4 | R2, 4, 6, 8 |
| ....4 | RS018010F03 | CHIP RES. 180 Ω 1% SMD 0603 | 4 | R1, 3, 5, 7 |
| ....4 | SWSKPMAME010 | ON / OFF TACT SWITCH 5MM 1.57N 90DEG | 4 | SW1~4 |
| ....4 | TE352001001 | 5P*2 CONNECTOR 2.0MM DIP | 1 | TE1 |
| **...3** | **TWPC10S003I01** | **PCB ASS'Y RIGHT SIDE SWITCH** | **1** | |

| Lvl | Materials | SPECS | Qty | Part Location |
|---|---|---|---|---|
| ....4 | DIEN1N4148WSM | DIODE FAST SWICTHING 1N4848W SOD-123 | 4 | D5~8 |
| ....4 | LDC191TBKT-5A | LED BLUE SMD 0603 | 4 | LD9, 11, 13, 15 |
| ....4 | LDKPTD-1608CGCK | LED YELLOW GREEN 0603 SMD 60DEG | 4 | LD10, 12, 14, 16 |
| ....4 | RS015010F03 | CHIP RES. 150 Ω 1% SMD 0603 | 4 | R10, 12, 14, 16 |
| ....4 | RS018010F03 | CHIP RES. 180 Ω 1% SMD 0603 | 4 | R9, 11, 13, 15 |
| ....4 | SWSKPMAME010 | ON / OFF TACT SWITCH 5MM 1.57N 90DEG | 4 | SW5~8 |
| ....4 | TE352001001 | 5P*2 CONNECTOR 2.0MM DIP | 1 | TE2 |
| ..2 | UHA5FS233X3X12 | CORE 45 O 100MHZ 23.3*3*12MM | 1 | |
| ..2 | WR112615032G6 | WIRE 10P/2.0/150MM | 1 | |
| ..2 | WS117010505P | WASHER (TEFLON) | 2 | |
| ..2 | WS663309IC | SPRING WASHER 3M/M | 6 | |

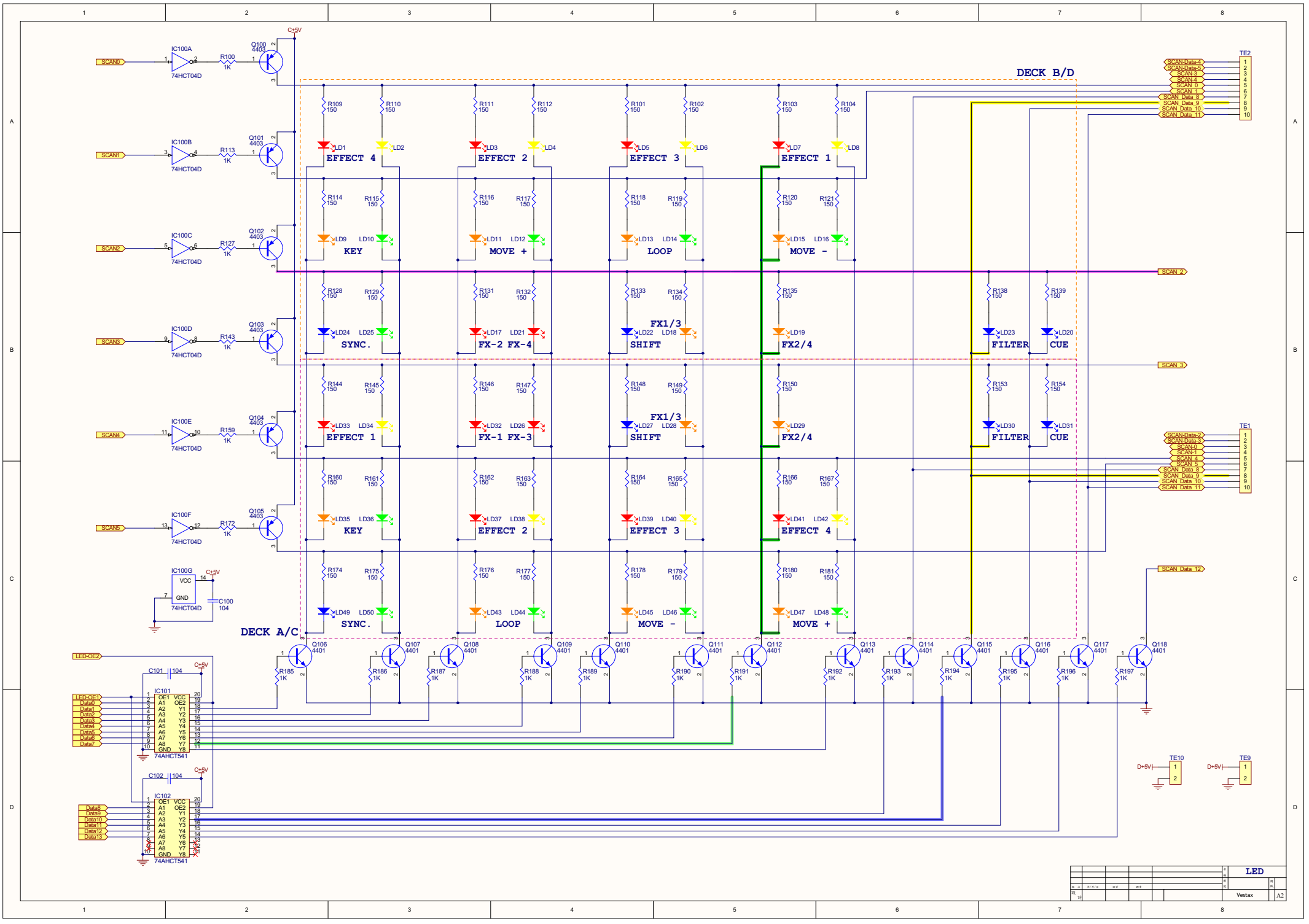
DECK B/D
DECK A/C
EFFECT 4
EFFECT 2
EFFECT 3
EFFECT 1
KEY
MOVE +
LOOP
MOVE -
SYNC.
FX-2 FX-4
FX1/3
SHIFT
FX2/4
FILTER
CUE
EFFECT 1
FX-1 FX-3
EFFECT 2
EFFECT 3
EFFECT 4
KEY
SYNC.
LOOP
MOVE -
MOVE +
SCAN0
SCAN1
SCAN2
SCAN3
SCAN4
SCAN5
SCAN_2
SCAN_3
SCAN_Data_12
LED-OE2
74HCT04D
74AHCT541
C+5V
D+5V
LED
Vestax
A2

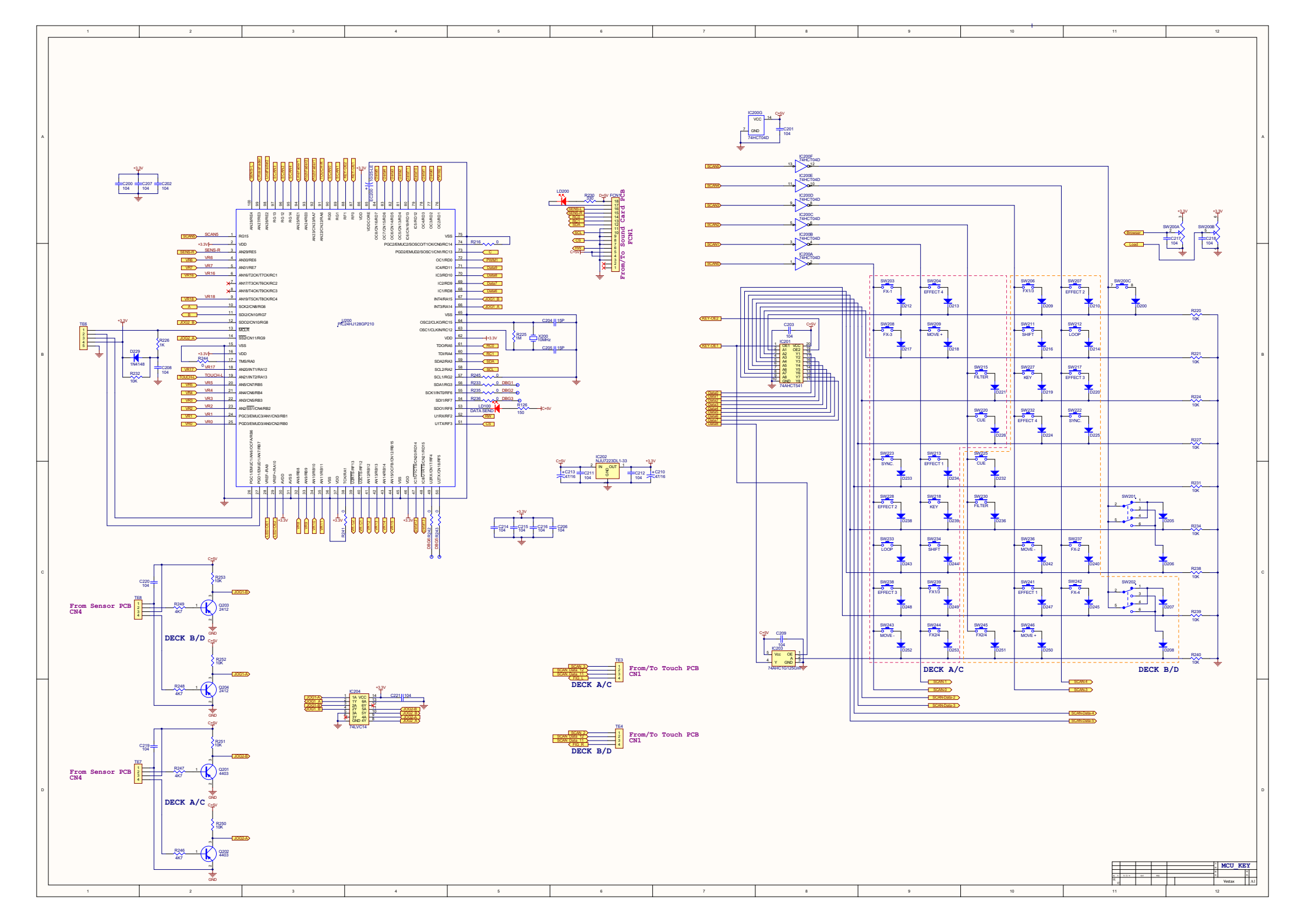
From/To Sound Card PCB
FCN1
From Sensor PCB CN4
DECK B/D
From Sensor PCB CN4
DECK A/C
From/To Touch PCB CN1
DECK A/C
From/To Touch PCB CN1
DECK B/D
DECK A/C
DECK B/D
MCU_KEY
Vestax

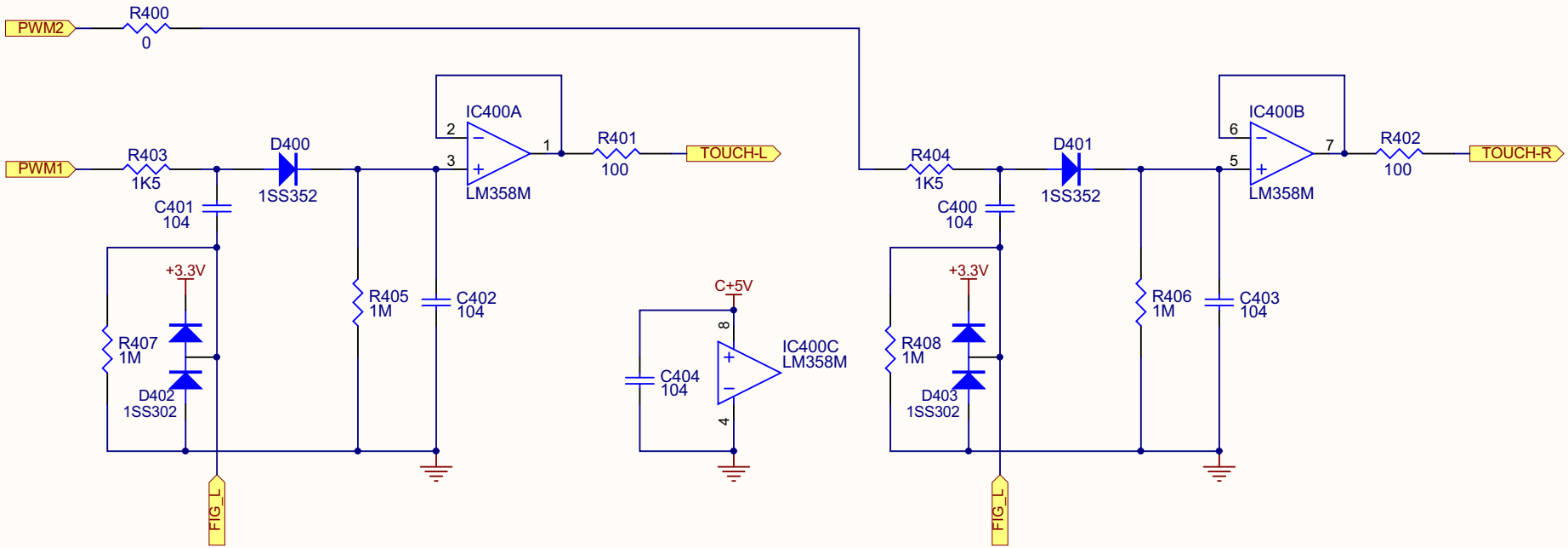


| | | | | | | |
|---|---|---|---|---|---|---|
| 版 次 | 年/月/日 | 設計 | 調查 | | 名稱 | TOUCH |
| 設計 | | | | | 圖號 | |
| | | | | Vestax | 用紙 | A4 |

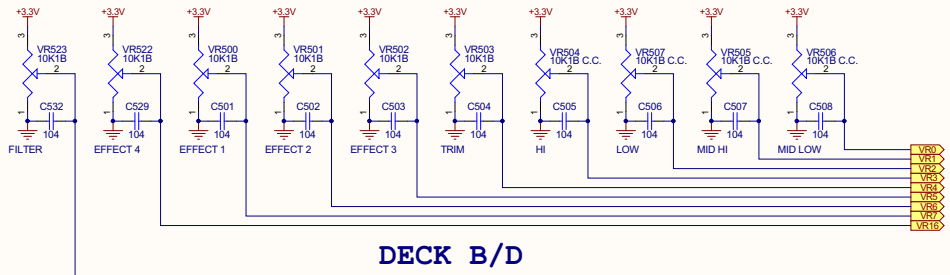


## DECK B/D

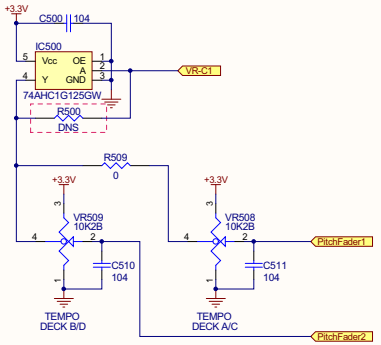


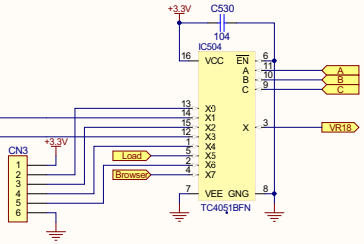


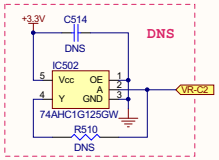


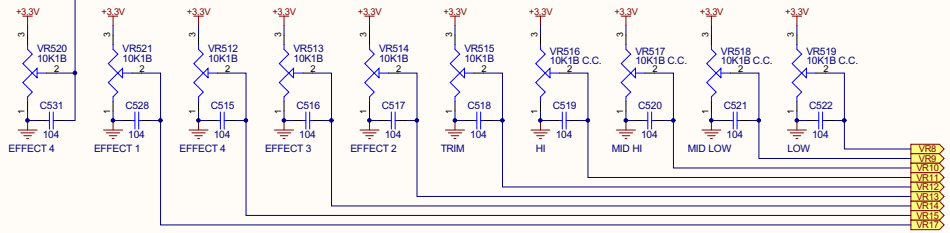


## DECK A/C

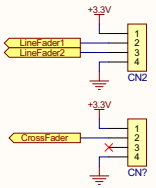


VR

Vestax

A2

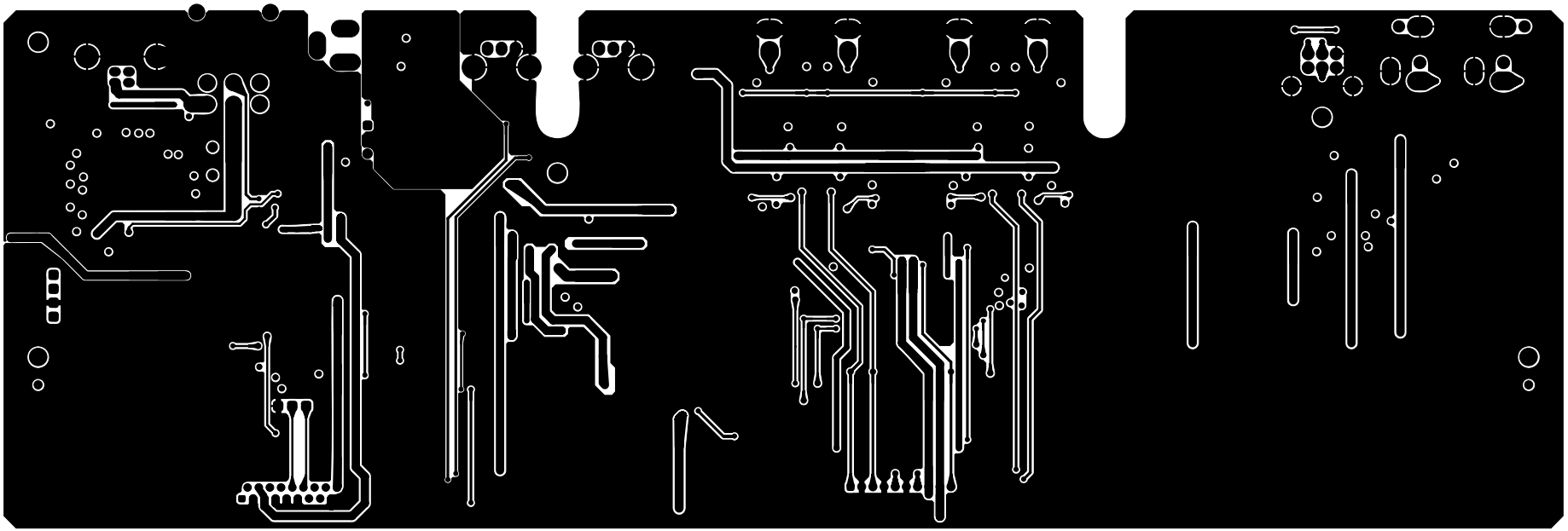

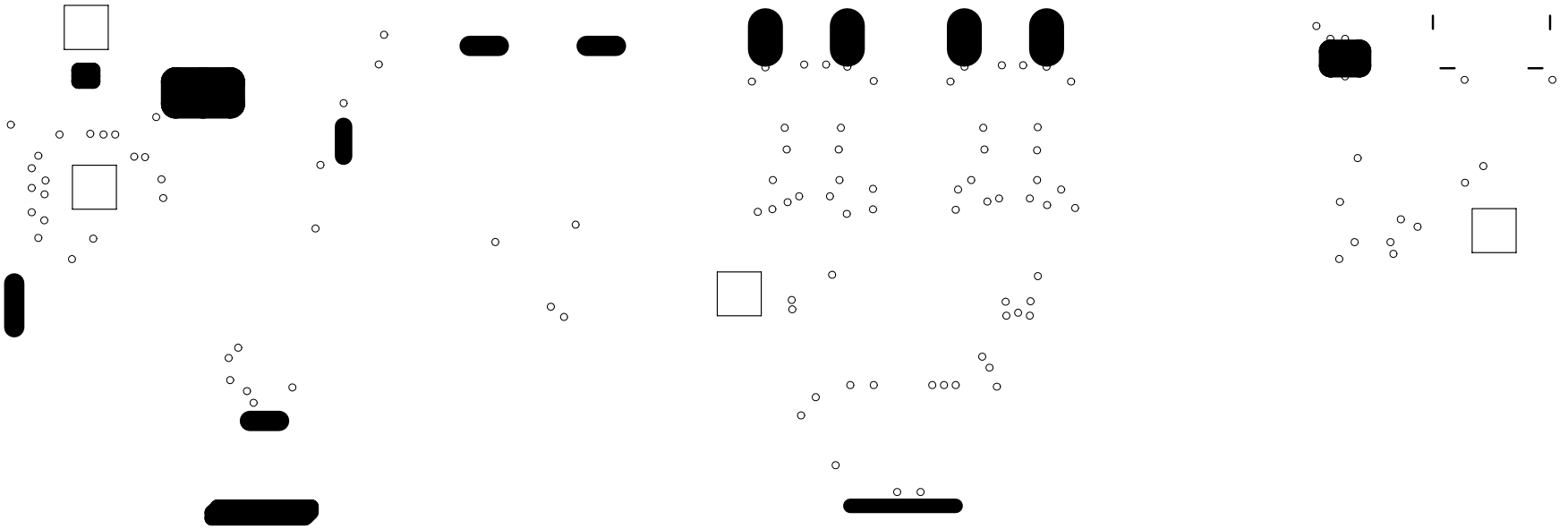

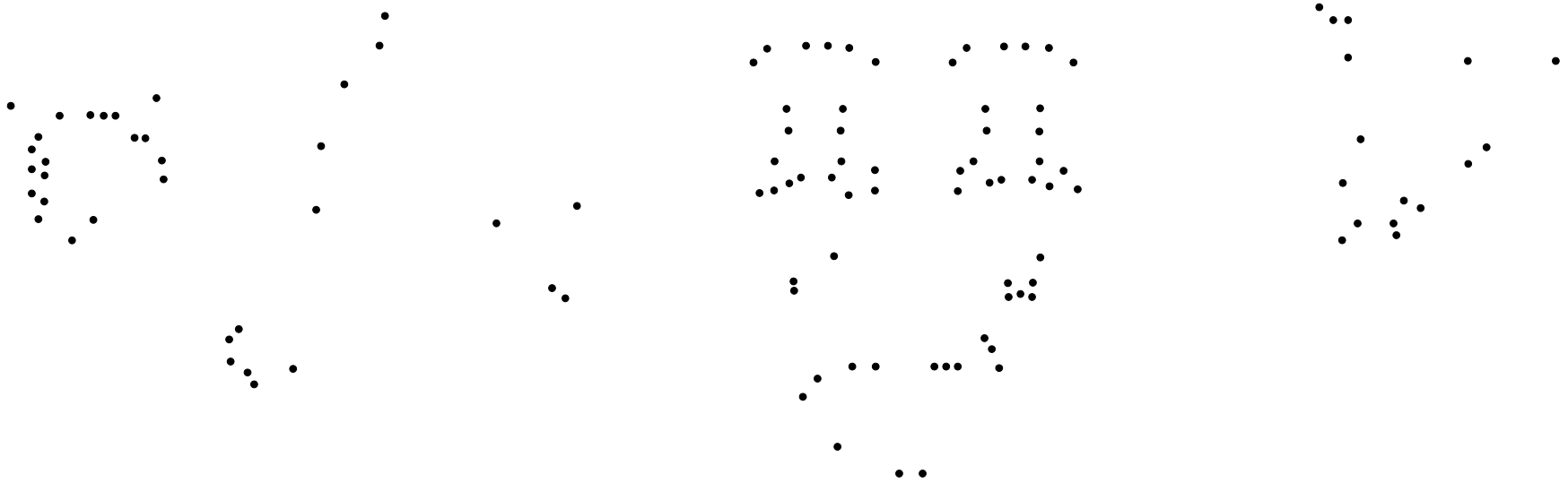

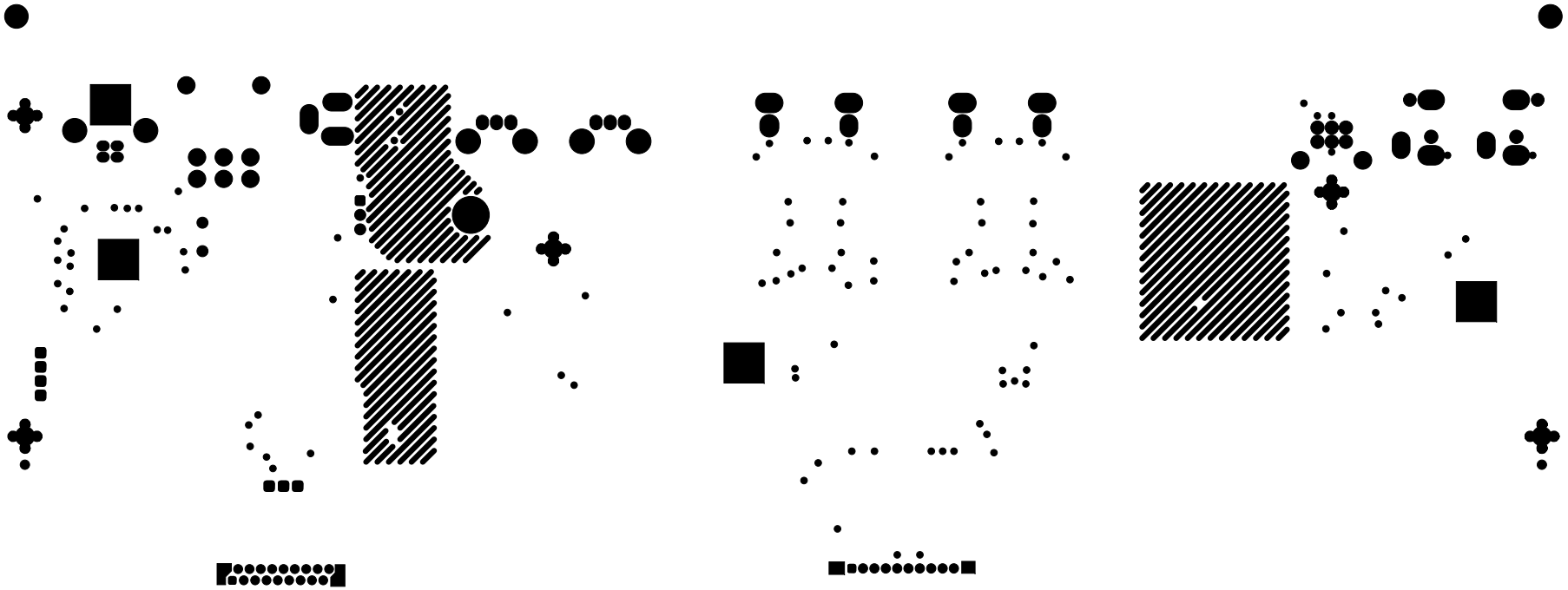

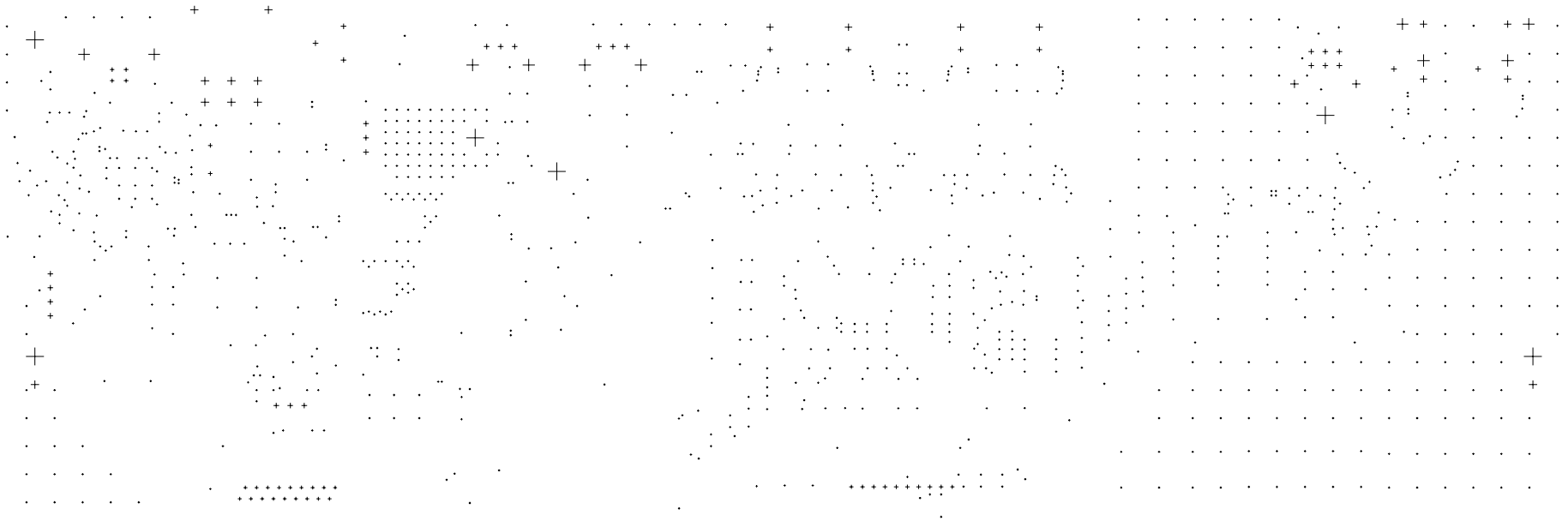

| Symbol | Hit Count | Tool Size | Physical Length | Rout Path Length | Plated | Hole Type |
|---|---|---|---|---|---|---|
| U | 970 | 0.4mm (15.748mil) | | | PTH | Round |
| G | 18 | 0.7mm (27.559mil) | | | PTH | Round |
| D | 2 | 0.75mm (29.528mil) | | | PTH | Round |
| C | 14 | 0.8mm (31.496mil) | | | PTH | Round |
| F | 22 | 1mm (39.37mil) | | | PTH | Round |
| N | 4 | 1.45mm (57.087mil) | | | PTH | Round |
| A | 14 | 1.5mm (59.055mil) | | | PTH | Round |
| R | 2 | 1.5mm (59.055mil) | | | NPTH | Round |
| H | 2 | 2.1mm (82.677mil) | | | PTH | Round |
| P | 2 | 2.1mm (82.677mil) | | | NPTH | Round |
| O | 2 | 2.2mm (86.614mil) | | | NPTH | Round |
| T | 4 | 2.2mm (86.614mil) | | | PTH | Round |
| E | 1 | 3.175mm (125mil) | | | PTH | Round |
| B | 5 | 3.2mm (125.984mil) | | | NPTH | Round |
| S | 4 | 4mm (157.48mil) | | | NPTH | Round |
| I | 4 | 1mm (39.37mil) | 2.1mm (82.677mil) | 1.1mm (43.307mil) | PTH | Slot |
| Q | 2 | 1mm (39.37mil) | 2.5mm (98.425mil) | 1.5mm (59.055mil) | PTH | Slot |
| L | 2 | 1mm (39.37mil) | 3mm (118.11mil) | 2mm (78.74mil) | PTH | Slot |
| M | 1 | 1mm (39.37mil) | 3.5mm (137.795mil) | 2.5mm (98.425mil) | PTH | Slot |
| K | 5 | 1.3mm (51.181mil) | 2.5mm (98.425mil) | 1.2mm (47.244mil) | PTH | Slot |
| J | 3 | 1.3mm (51.181mil) | 2.6mm (102.362mil) | 1.3mm (51.181mil) | PTH | Slot |
| | 1083 Total | | | | | |

**Slot definitions :** **Rout Path Length** = Calculated from tool start centre position to tool end centre position.
**Physical Length** = Rout Path Length + Tool Size = Slot length as defined in the PCB layout

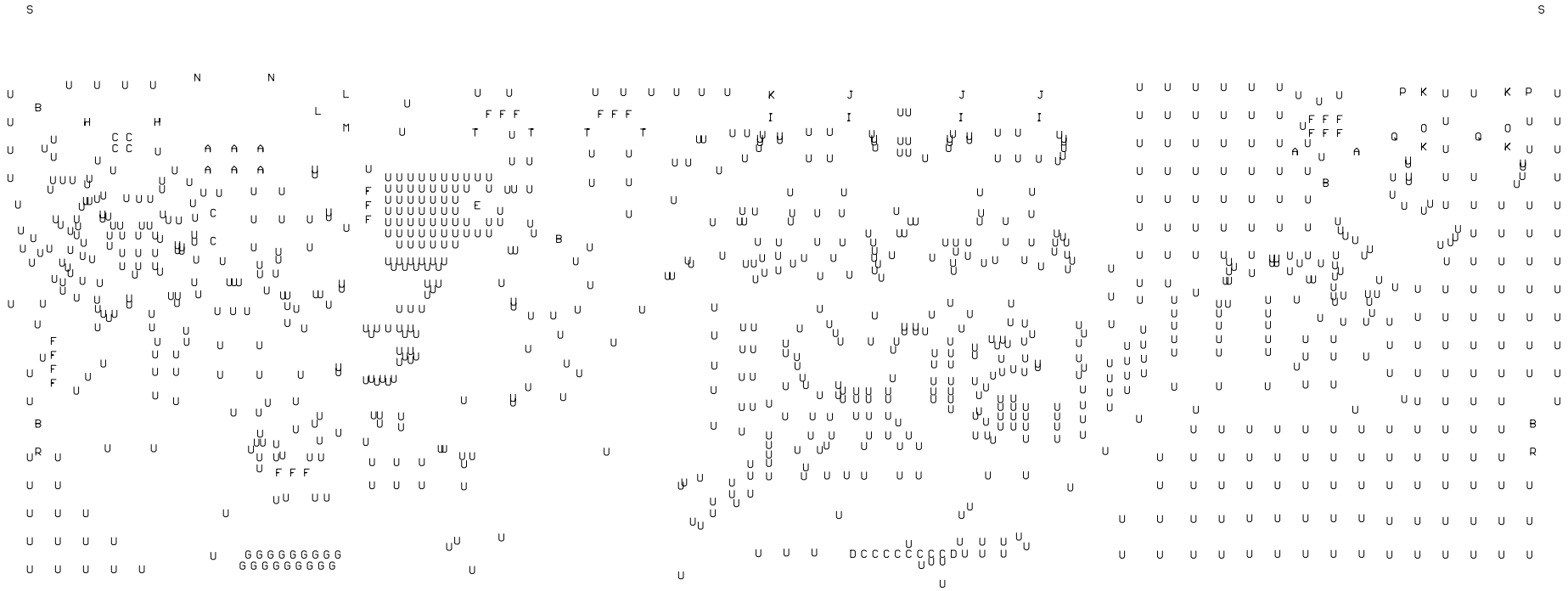

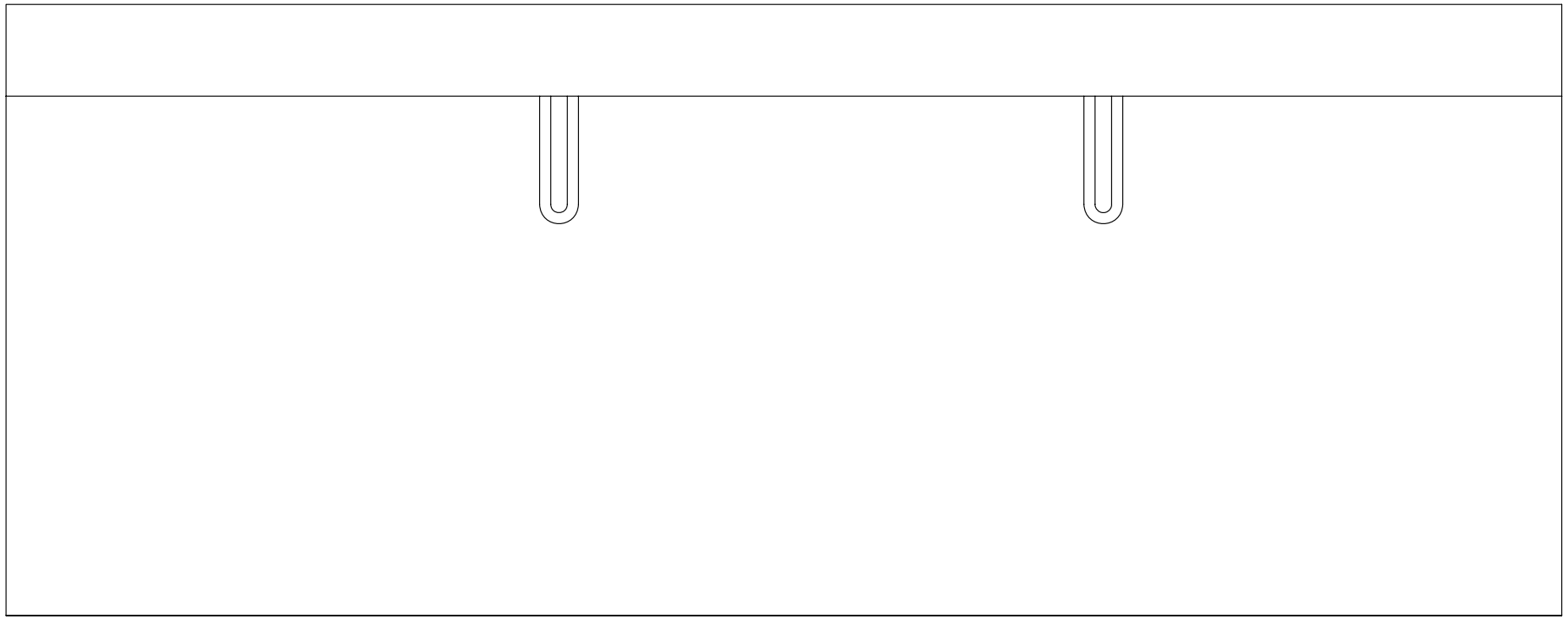

PC10S001

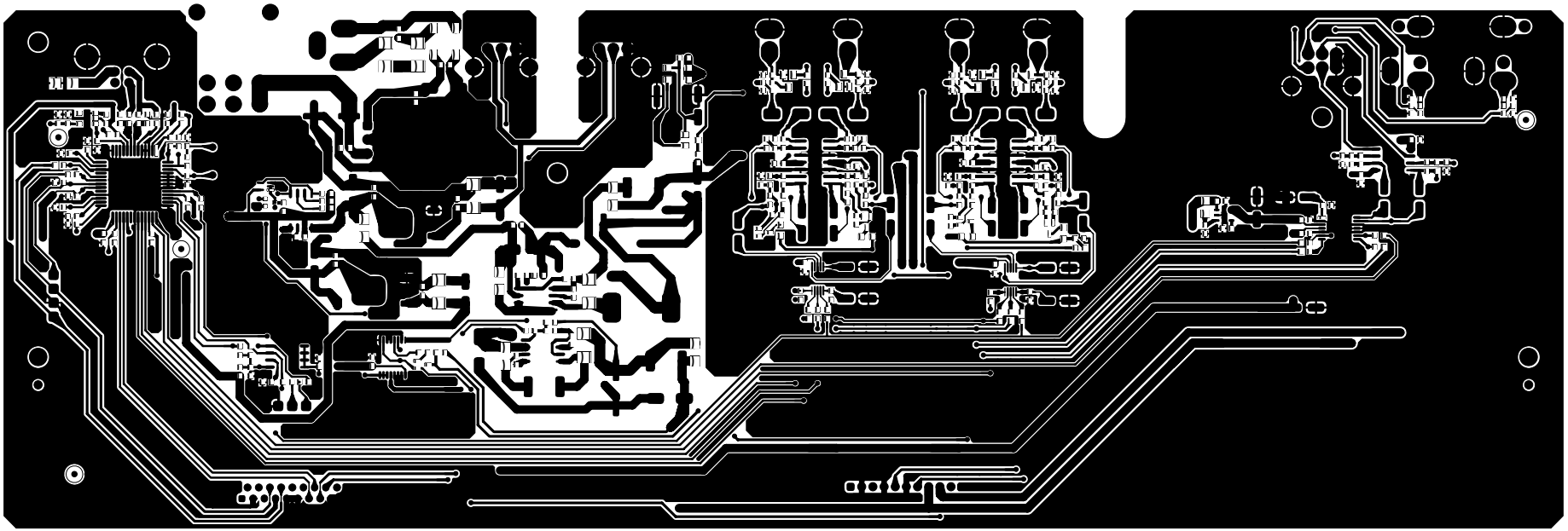

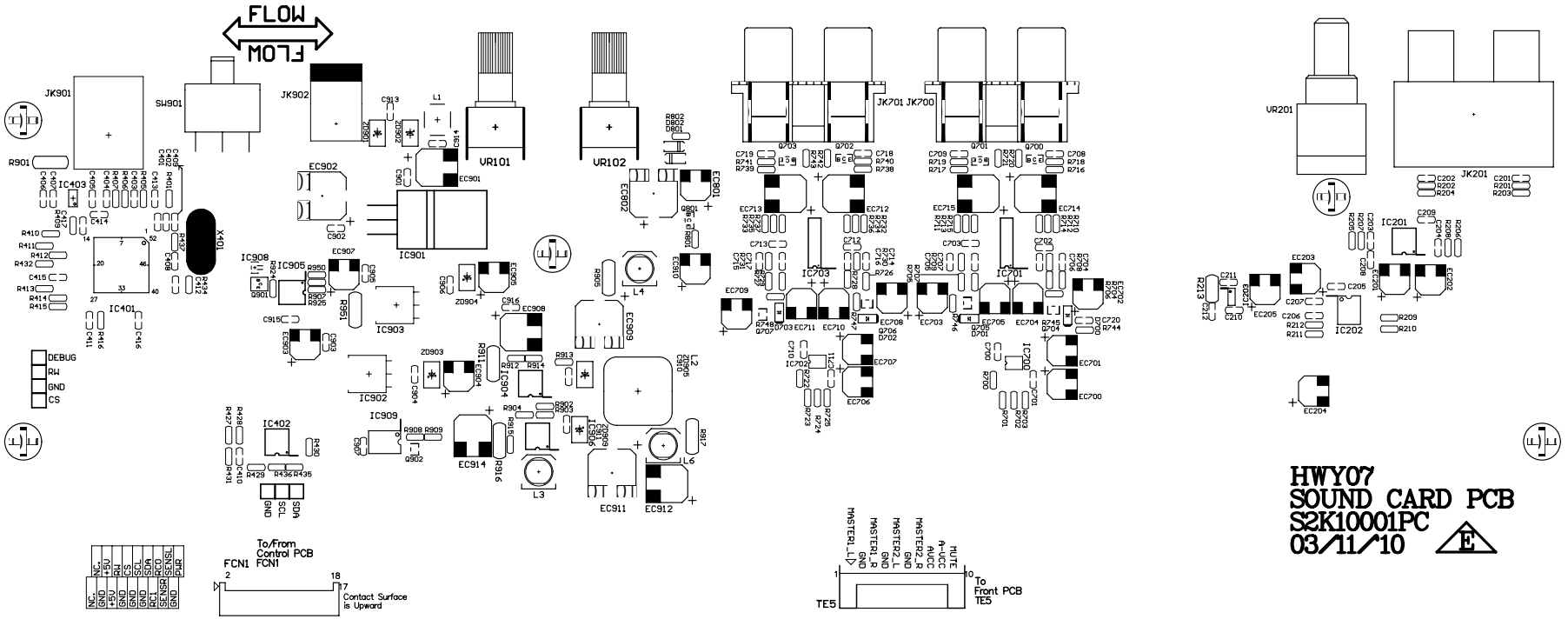


**HWY07**
**SOUND CARD PCB**
**S2K10001PC**
**03/11/10** E

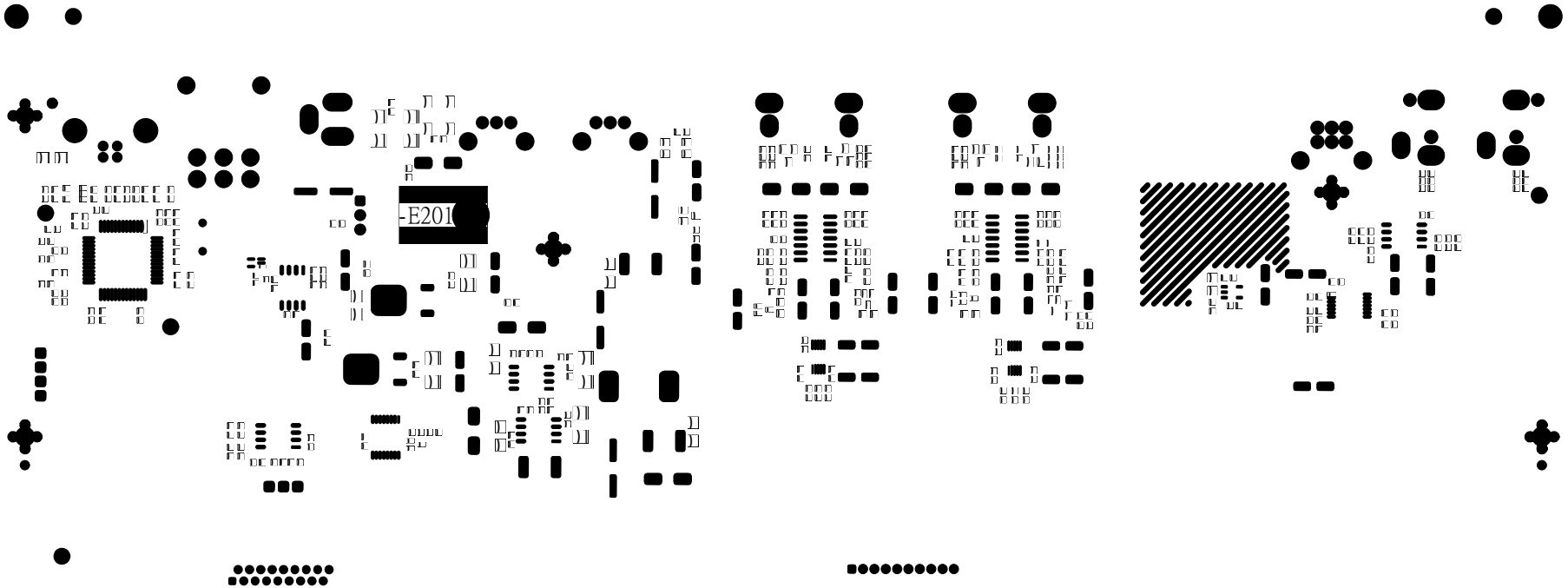

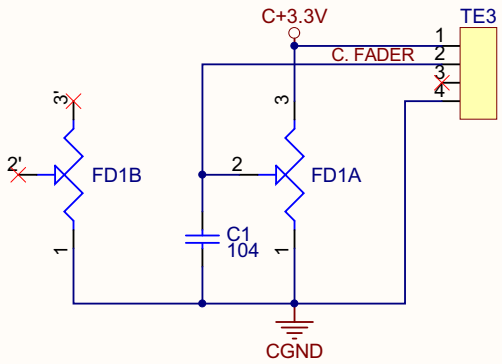


**To Control PCB**
**CN1**

| | | |
|---|---|---|
| Title | **SNC07 Cross Fader SCH** | |
| Size: A4 | Number: | Revision: **0** |
| Date: 2010/9/27 | Sheet of | |
| File: D:\SinoLink\..\SNC07 Cross Fader 20100521.SchDoc | Drawn By: | |

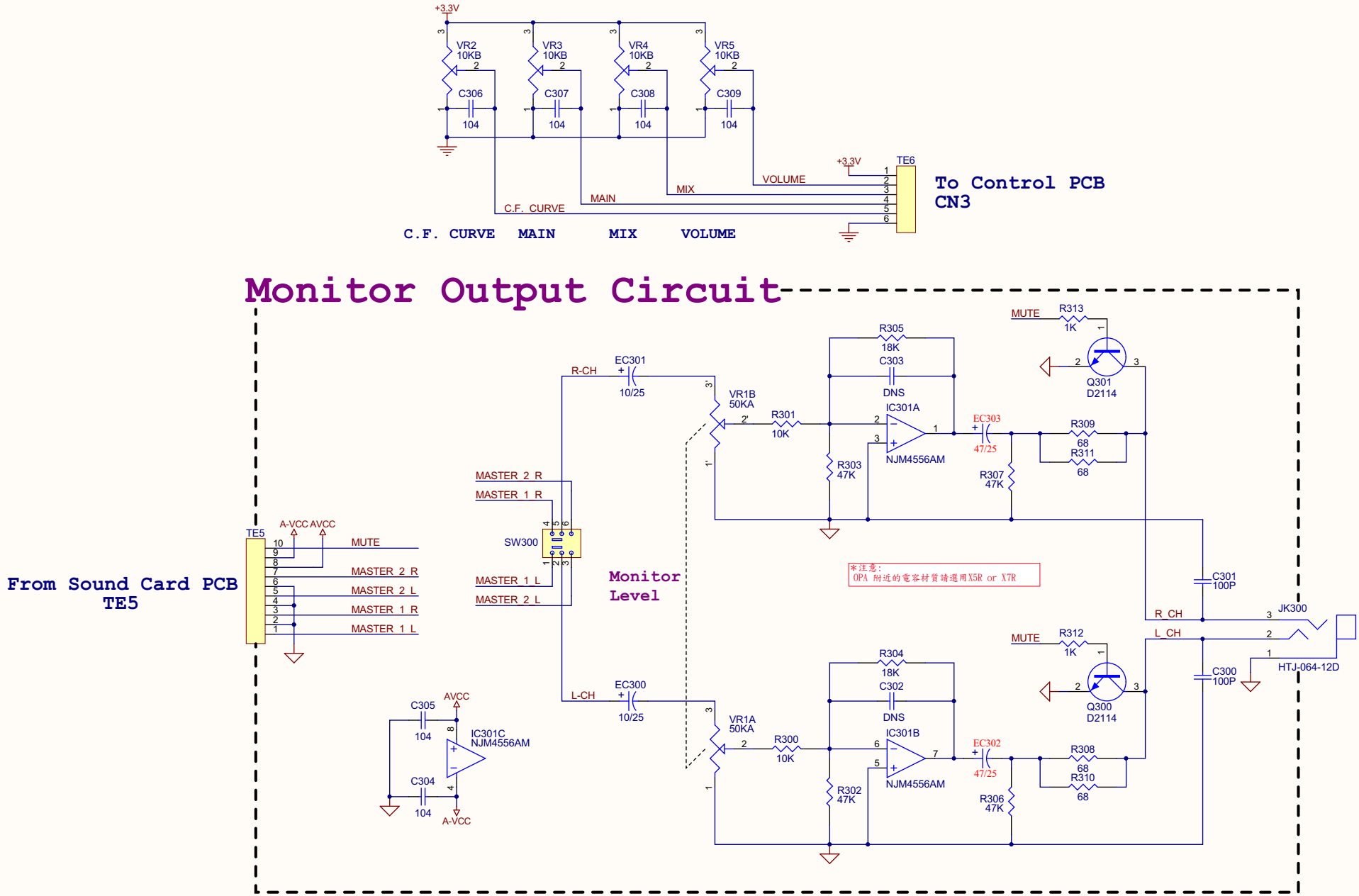


Front

Vestax

A3

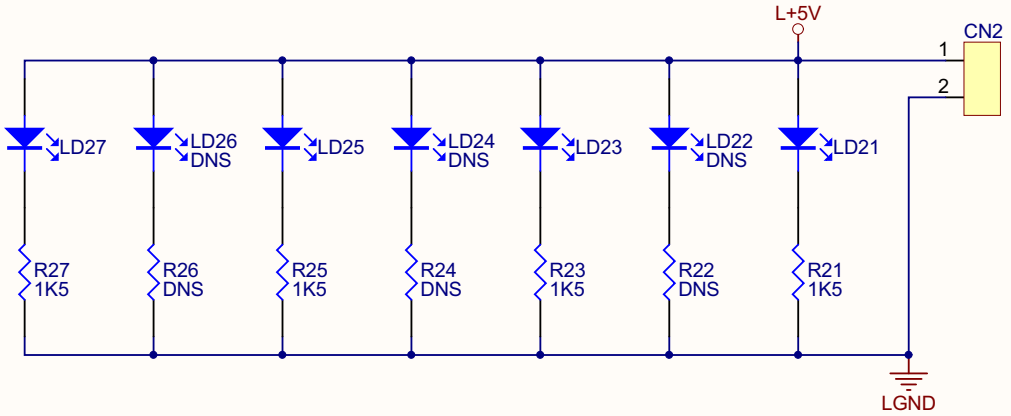


| | | |
|---|---|---|
| Title | SNC07 Left Side LED SCH | |
| Size: A4 | Number: | Revision: 0 |
| Date: 2010/9/27 | Sheet of | |
| File: D:\SinoLink\...\SNC07 Left Side-A20100831.SchDoc | Drawn By: | |

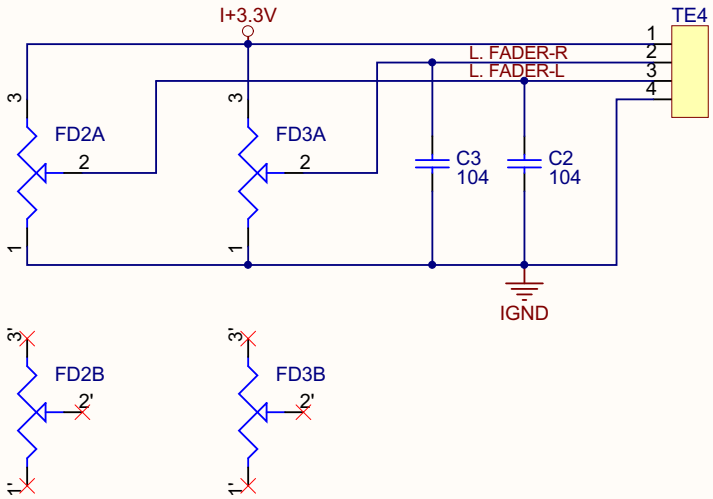


**To Control PCB**
**CN2**

| | | |
|---|---|---|
| Title | SNC07 Line Fader SCH | |
| Size: A4 | Number: | Revision: 0 |
| Date: 2010/9/27 | Sheet of | |
| File: D:\SinoLink\..\SNC07 Line Fader 2010B521.SchDoc | Drawn By: | |

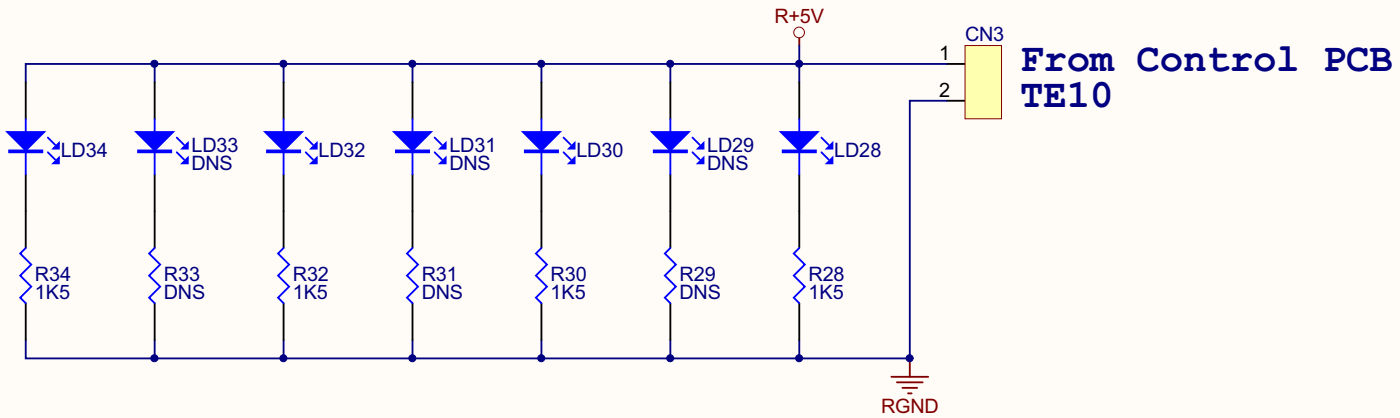


| | | |
|---|---|---|
| Title | SNC07 Right Side LED SCH | |
| Size: A4 | Number: | Revision: 0 |
| Date: 2010/9/27 | Sheet of | |
| File: D:\SinoLink\...\SNC07 Right Side LED 20100831.SchDoc | Drawn By: | |

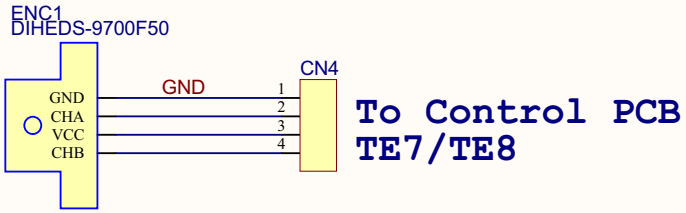


**To Control PCB**
**TE7/TE8**

| | | | | | | |
|---|---|---|---|---|---|---|
| 版 次 | 年/月/日 | 設計 | 調查 | | 名稱 | |
| 設計 | | | | | 圖號 | 用紙 |
| | | | | | Vestax | A4 |

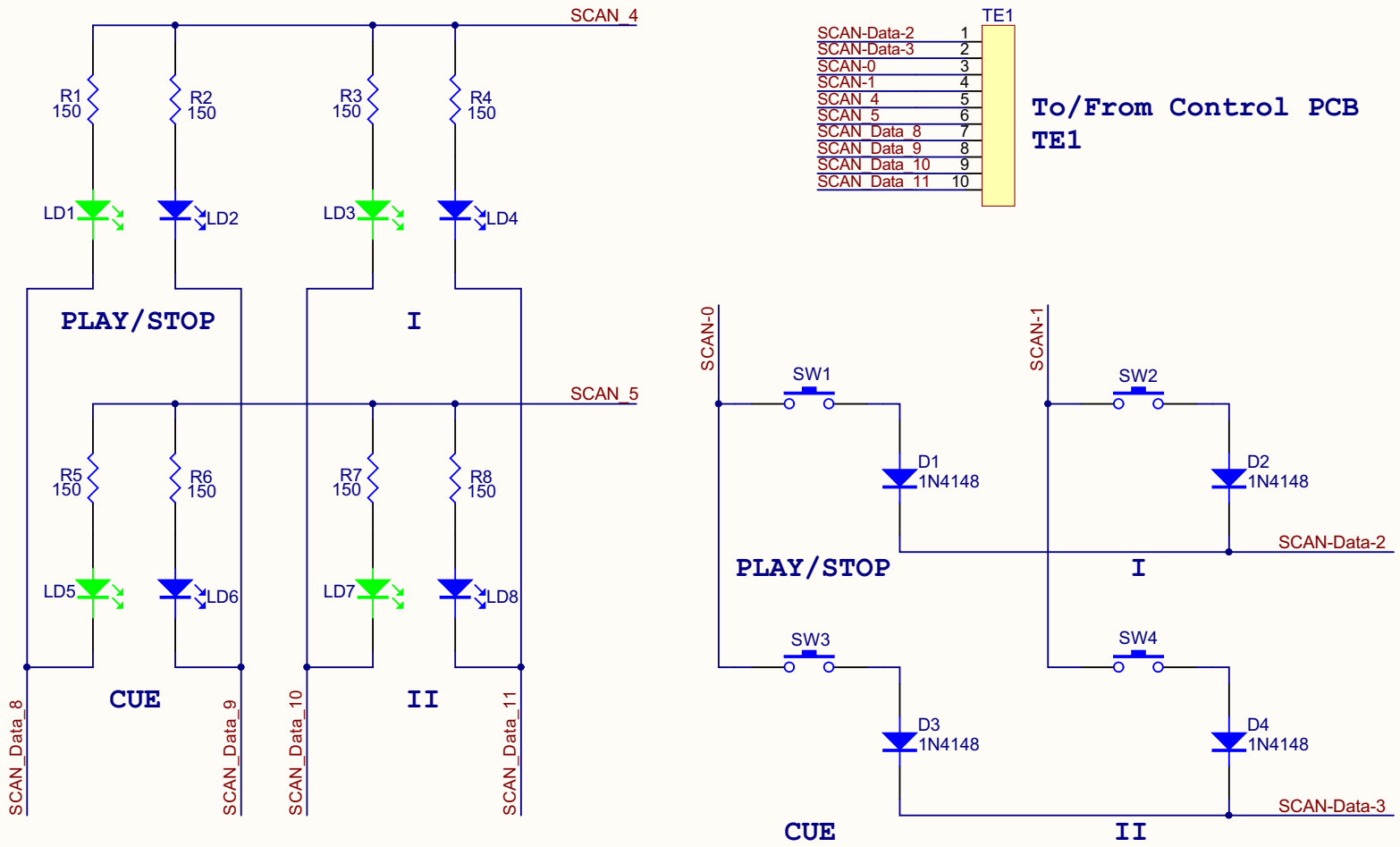


# Left Switch

| | | |
|---|---|---|
| Title | SNC07 Left Switch SCH | |
| Size: A4 | Number: | Revision: 0 |
| Date: 2010/9/27 | Sheet of | |
| File: D:\SinoLink\..\SNC07 Switch_L-A20100930.SchDoc | | |

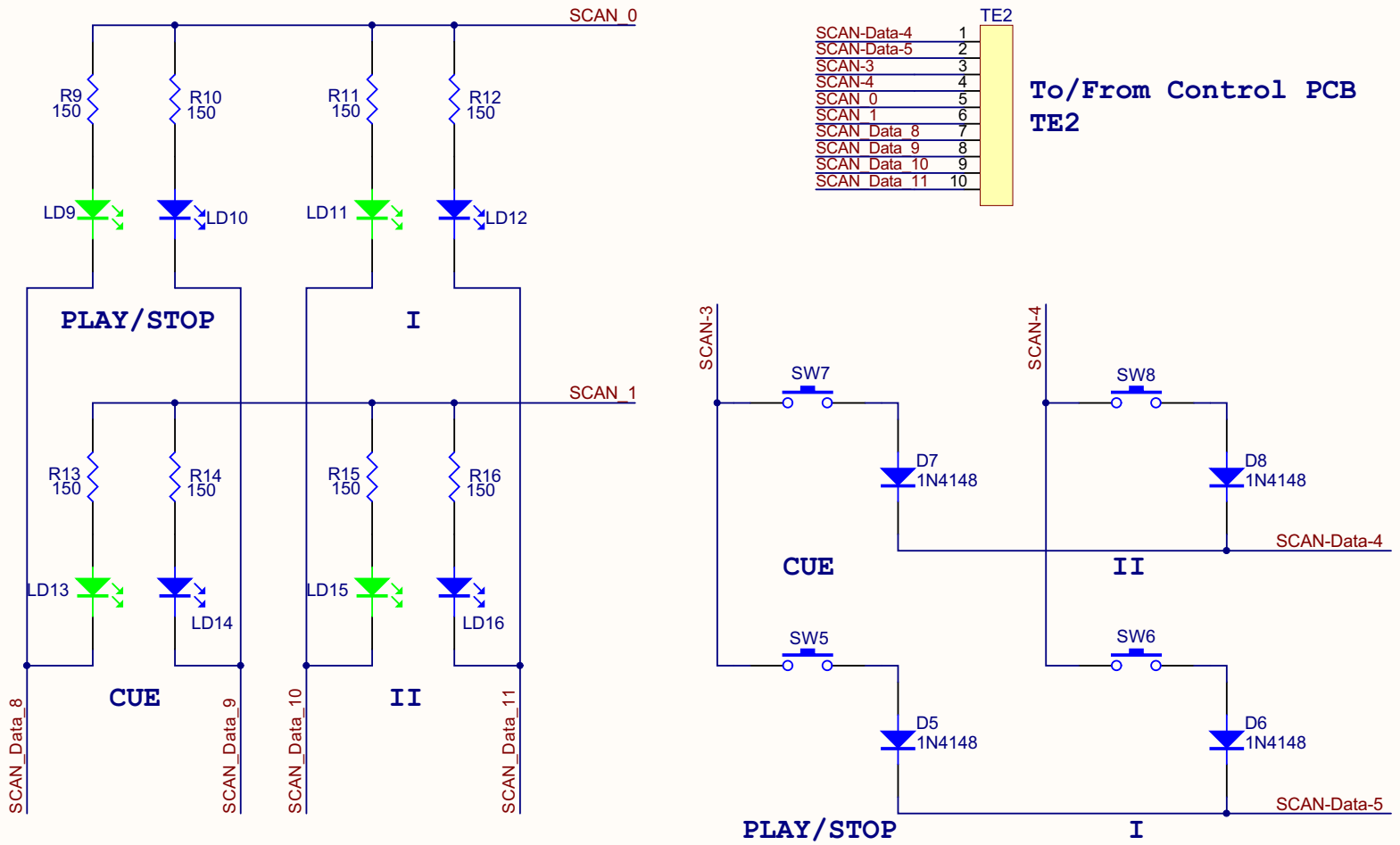


# Right Switch

| | | |
|---|---|---|
| Title | SNC07 Right Switch SCH | |
| Size: A4 | Number: | Revision: 0 |
| Date: 2010/9/27 | Sheet of | |
| File: D:\SinoLink\..\SNC07 Switch_R-02[illegible].SchDoc | | |

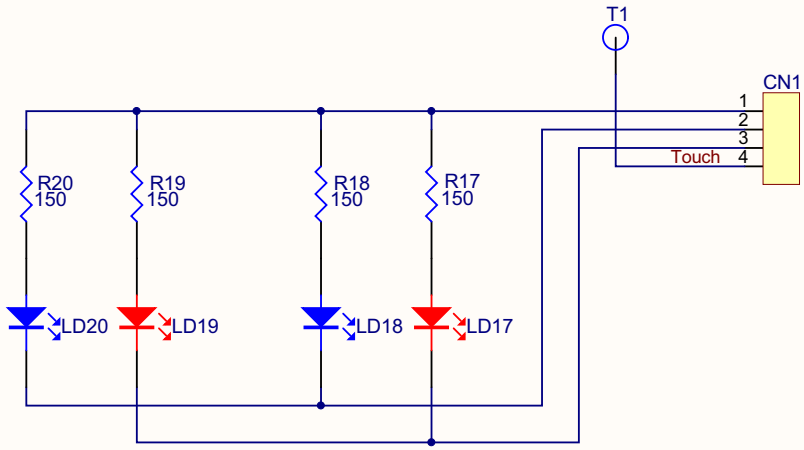


**From Control PCB**
**TE3/TE4**

| | | |
|---|---|---|
| Title: **SNC07 Touch Wheel SCH** | | |
| Size: A4 | Number: | Revision: **0** |
| Date: 2010/9/27 | Sheet of | |
| File: D:\SinoLink\..\SNC07 Touch -0201003.SchDoc | Drawn By: | |

Bottom Layer

Bottom Overlay Layer

Bottom Solder Layer

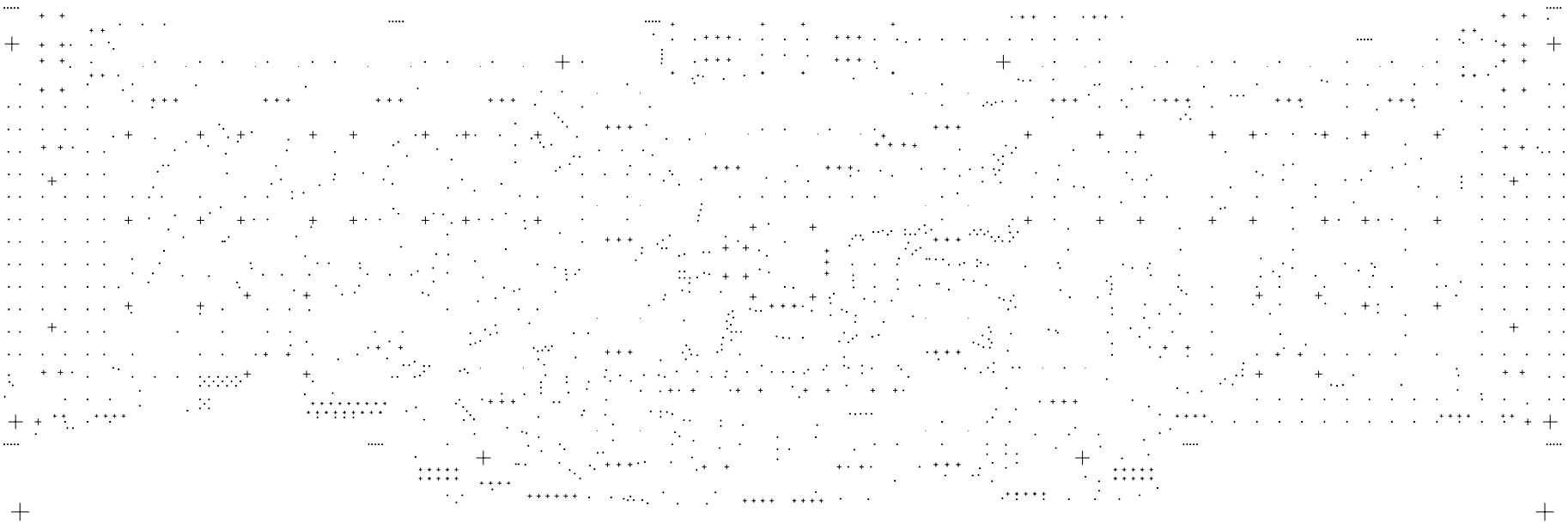

| Symbol | Hit Count | Tool Size | Physical Length | Rout Path Length | Plated | Hole Type |
|---|---|---|---|---|---|---|
| M | 40 | 0.1mm (3.937mil) | | | NPTH | Round |
| Q | 45 | 0.4mm (15.748mil) | | | NPTH | Round |
| S | 1169 | 0.4mm (15.748mil) | | | PTH | Round |
| G | 18 | 0.7mm (27.559mil) | | | PTH | Round |
| B | 16 | 0.75mm (29.528mil) | | | PTH | Round |
| A | 41 | 0.8mm (31.496mil) | | | PTH | Round |
| E | 26 | 0.9mm (35.433mil) | | | PTH | Round |
| K | 20 | 1mm (39.37mil) | | | NPTH | Round |
| D | 71 | 1mm (39.37mil) | | | PTH | Round |
| J | 24 | 1.1mm (43.307mil) | | | PTH | Round |
| H | 4 | 1.4mm (55.118mil) | | | PTH | Round |
| C | 2 | 1.5mm (59.055mil) | | | NPTH | Round |
| I | 4 | 1.5mm (59.055mil) | | | PTH | Round |
| O | 8 | 1.6mm (62.992mil) | | | NPTH | Round |
| P | 36 | 1.7mm (66.929mil) | | | NPTH | Round |
| L | 4 | 2mm (78.74mil) | | | PTH | Round |
| N | 8 | 3.2mm (125.984mil) | | | NPTH | Round |
| R | 2 | 4mm (157.48mil) | | | NPTH | Round |
| F | 8 | 0.8mm (31.496mil) | 2mm (78.74mil) | 1.2mm (47.244mil) | PTH | Slot |
| | 1546 Total | | | | | |

**Slot definitions :** **Rout Path Length** = Calculated from tool start centre position to tool end centre position.
**Physical Length** = Rout Path Length + Tool Size = Slot length as defined in the PCB layout

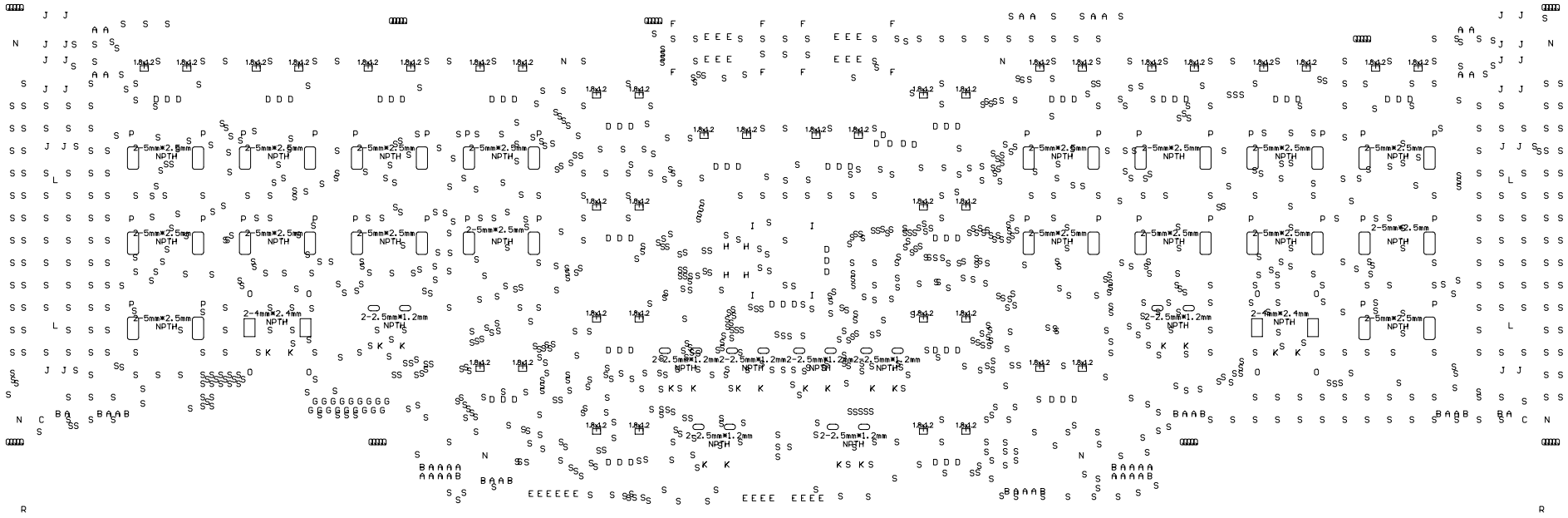

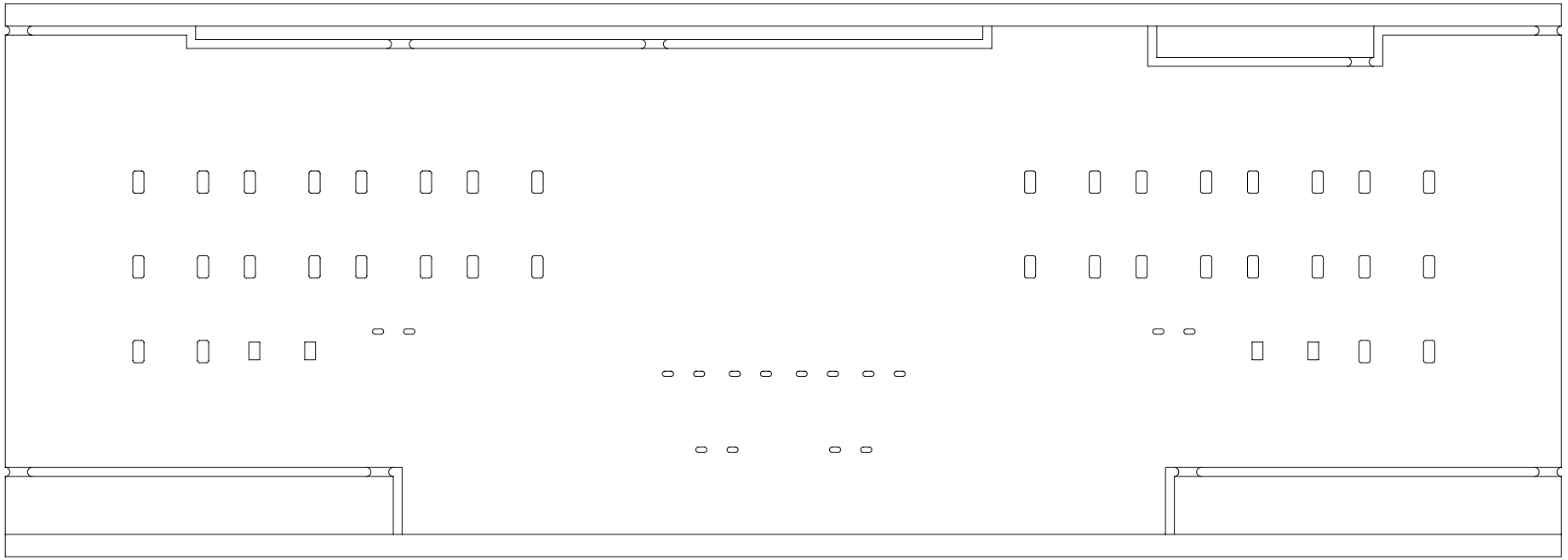

Top Layer

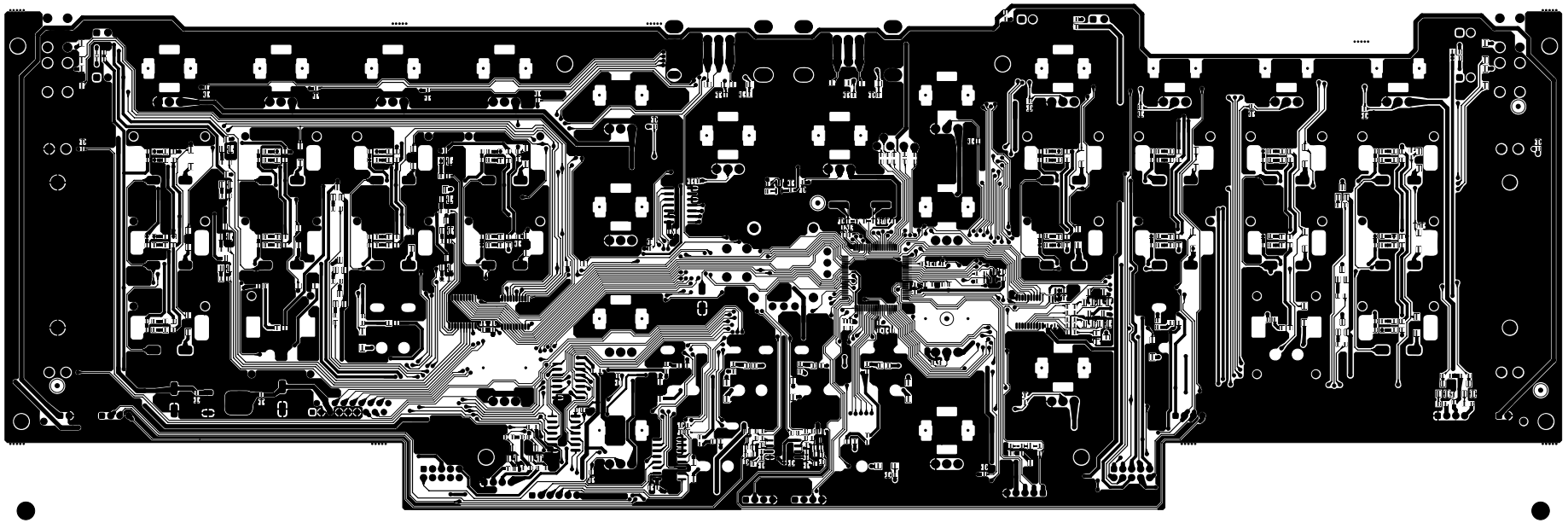

Top Overlay Layer

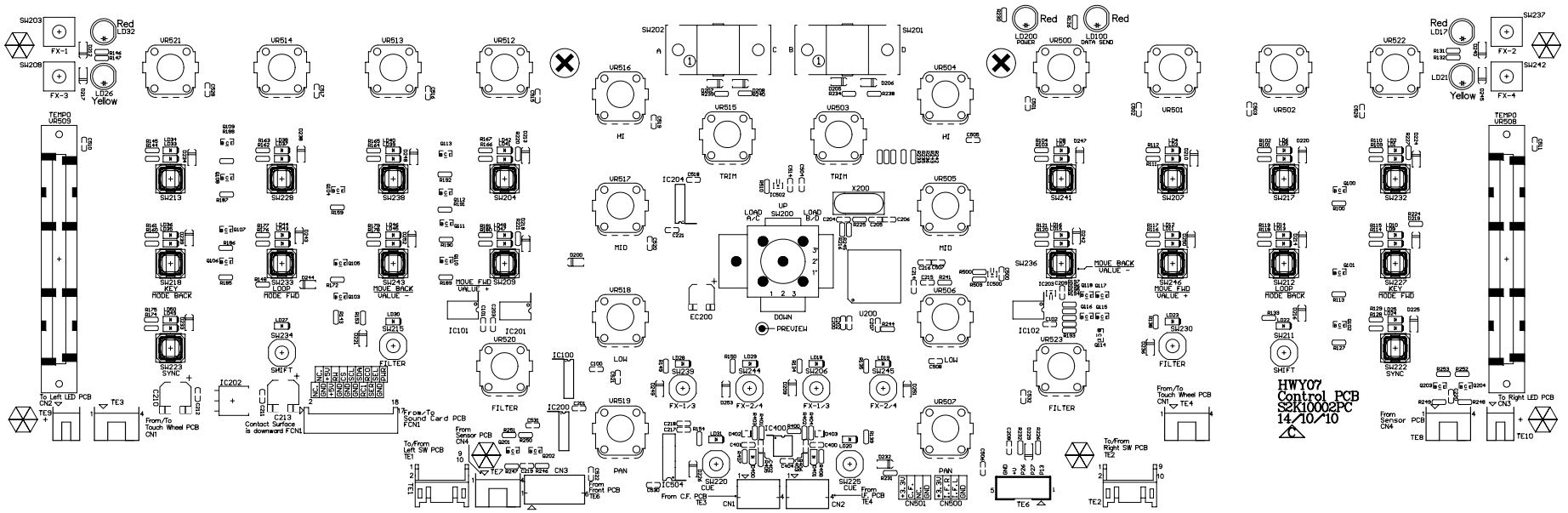

Top Paste Layer

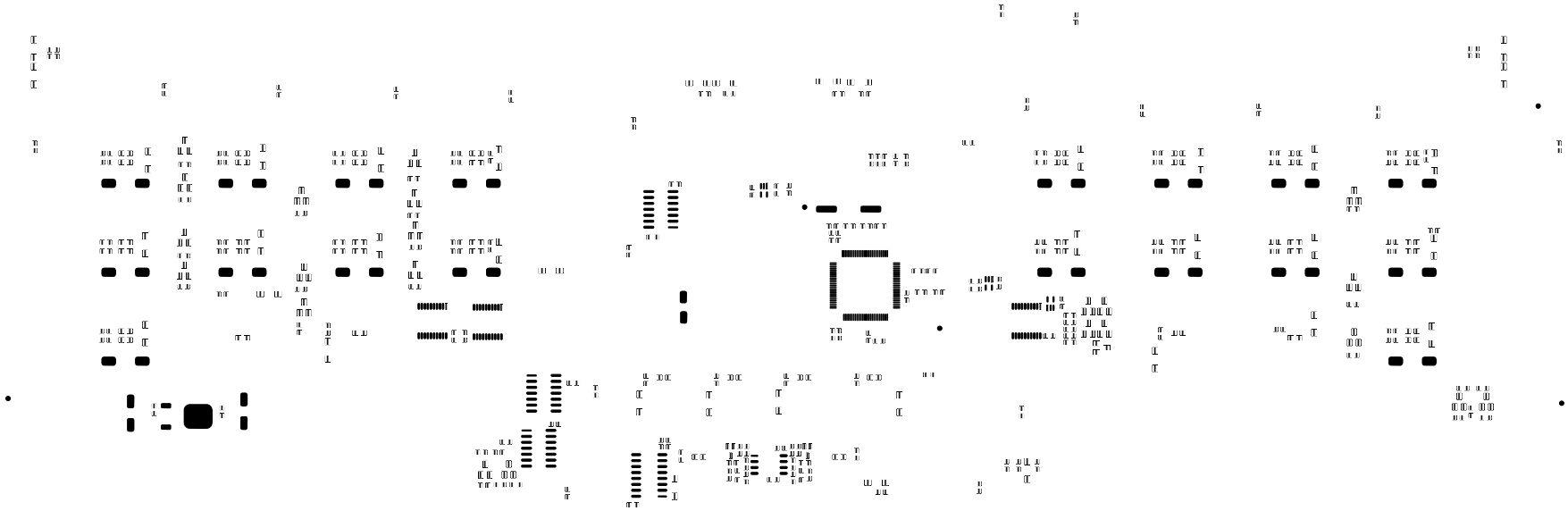

Top Solder Layer

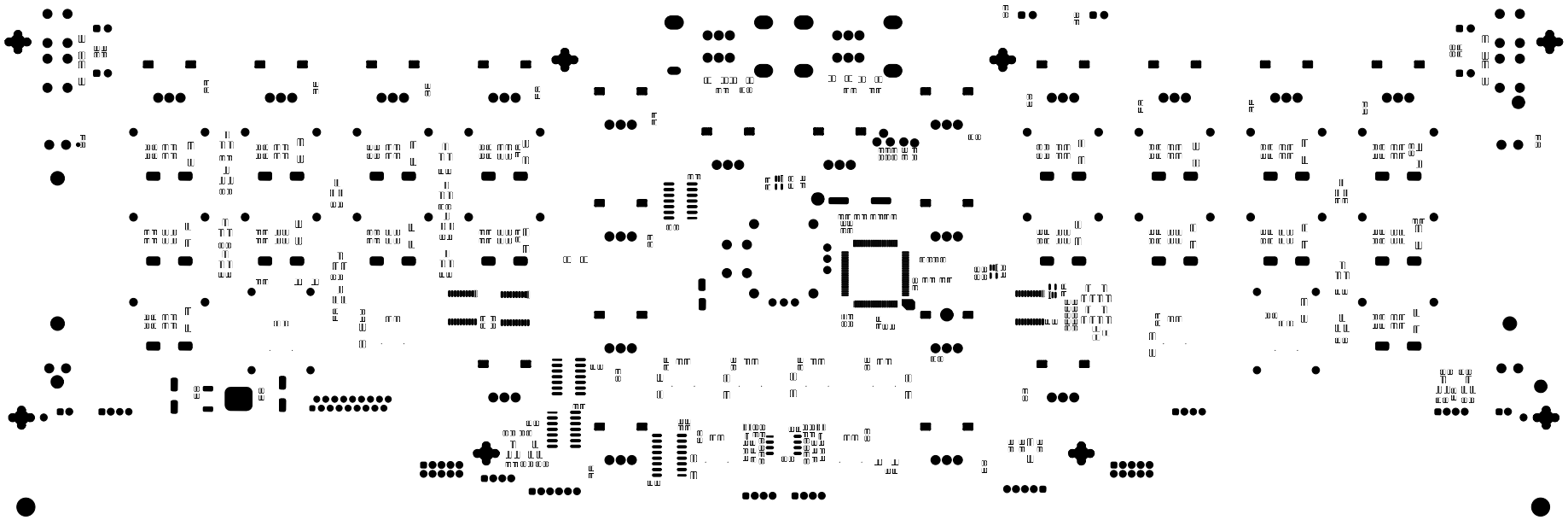

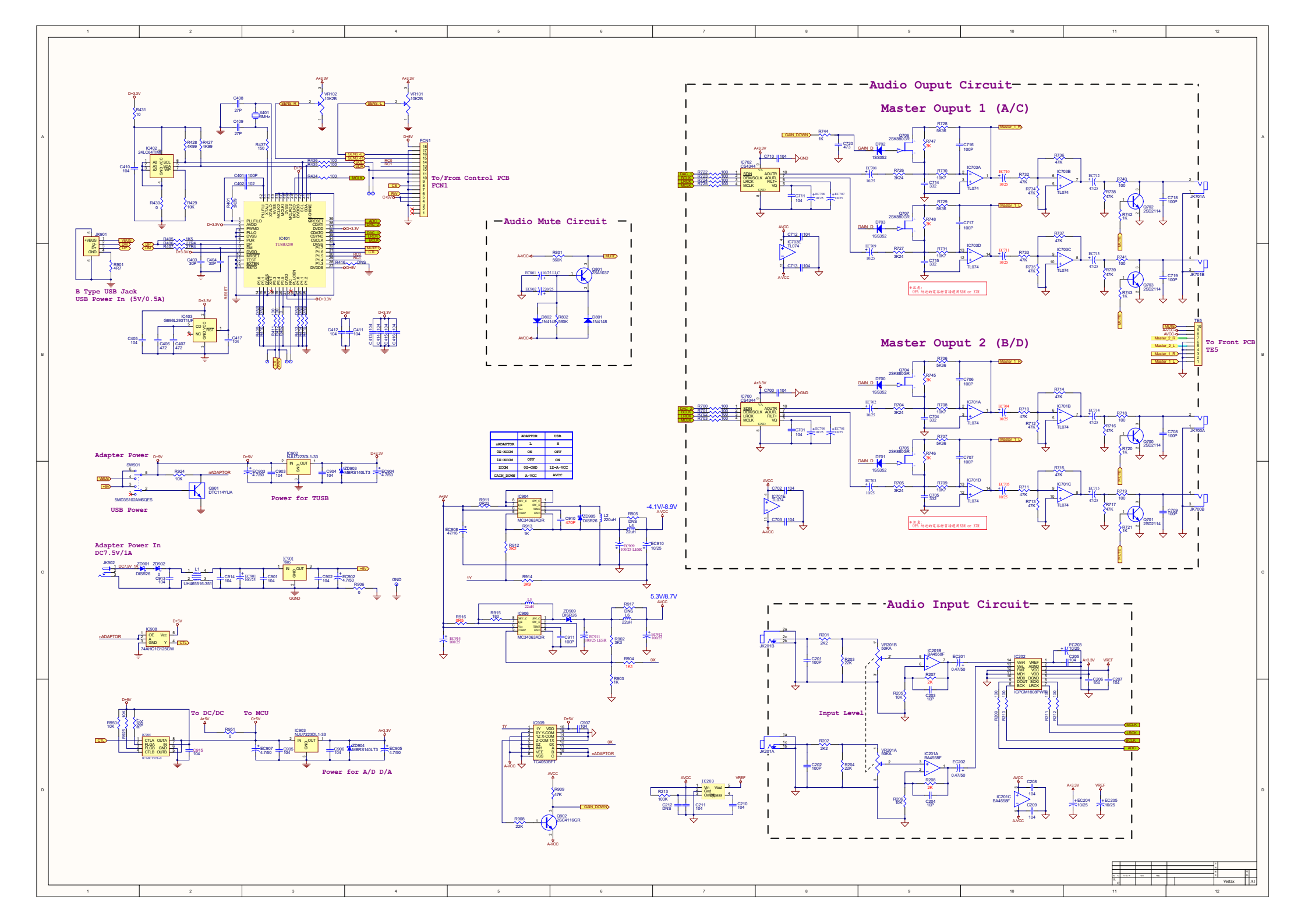
Audio Ouput Circuit
Master Ouput 1 (A/C)
Master Ouput 2 (B/D)
Audio Mute Circuit
Audio Input Circuit
To/From Control PCB
FCN1
To Front PCB
TE5
B Type USB Jack
USB Power In (5V/0.5A)
Adapter Power
USB Power
Power for TUSB
Adapter Power In
DC7.5V/1A
To DC/DC
To MCU
Power for A/D D/A
-4.1V/-8.9V
5.3V/8.7V
Input Level
ADAPTOR
USB
nADAPTOR
GAIN_DOWN
MUTE

Bottom layer

Bottom Overlay Layer

the same

the same

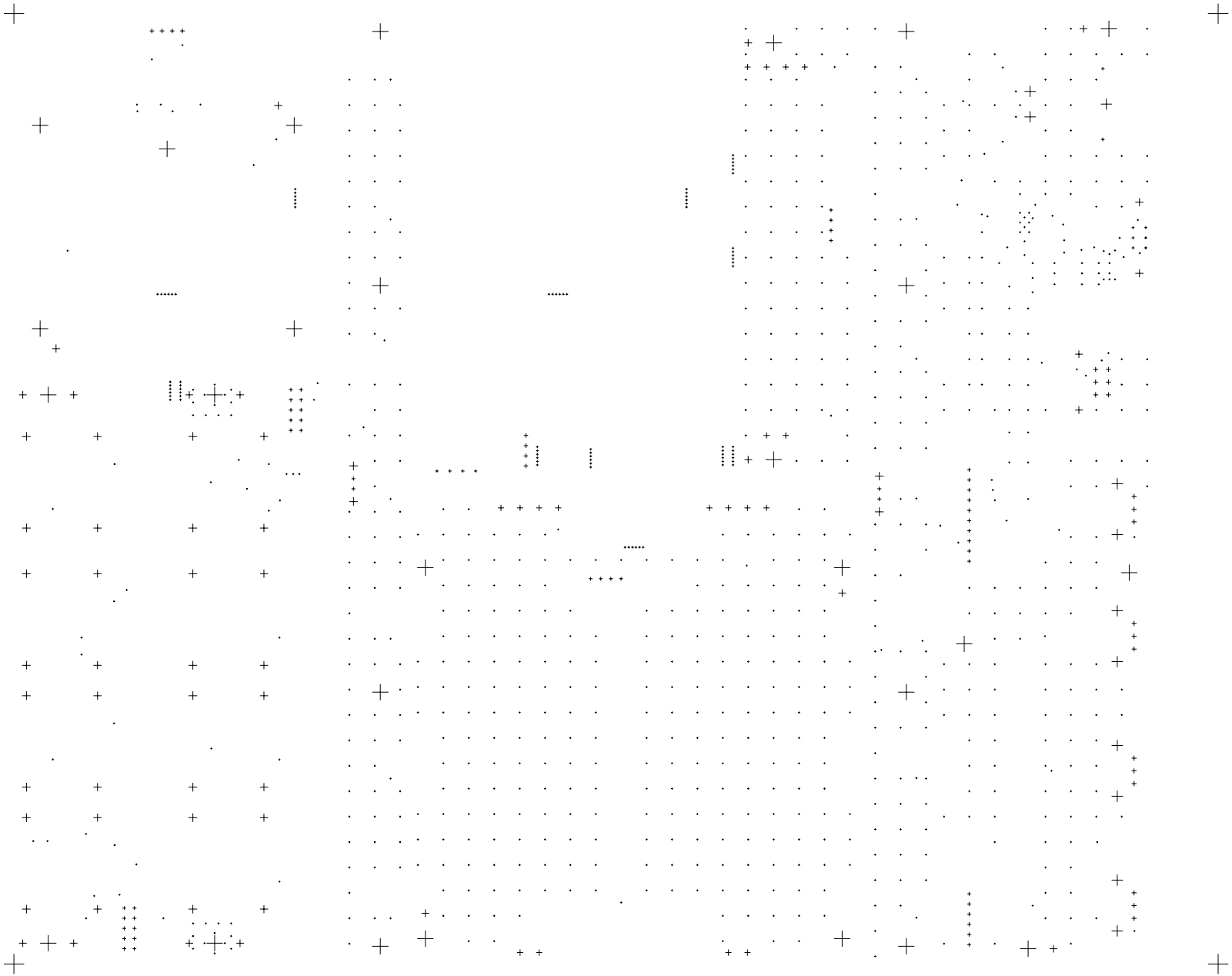

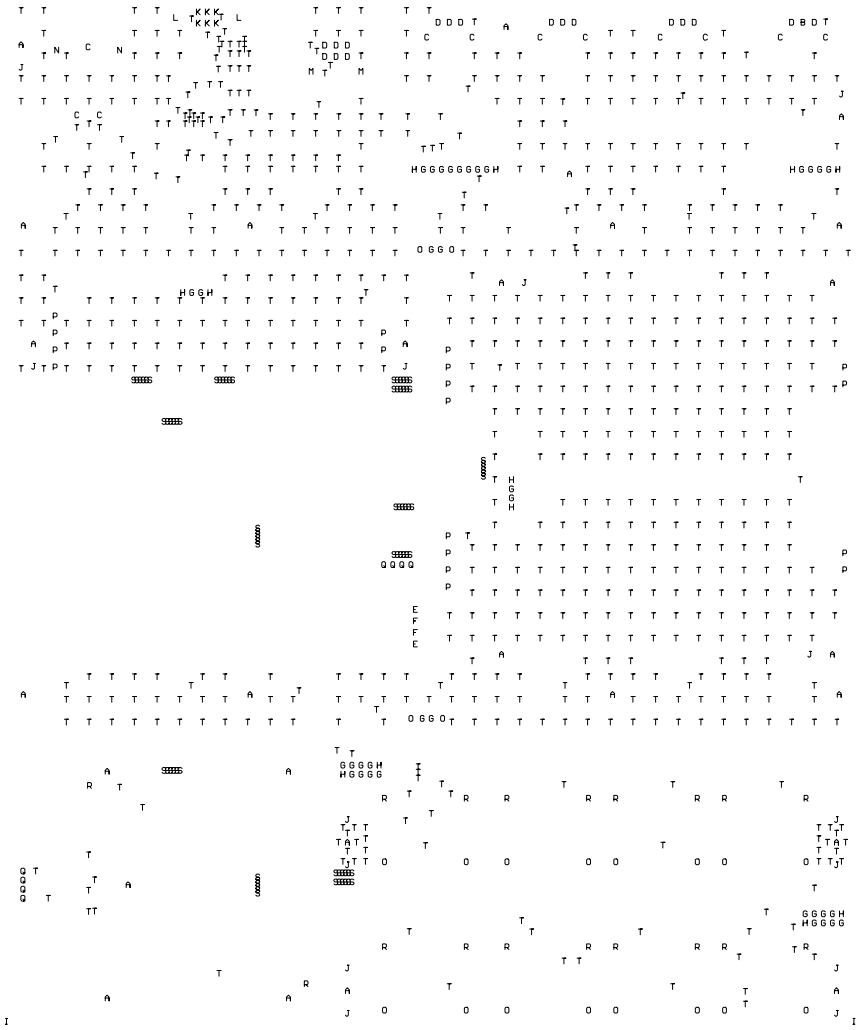

| Symbol | Hit Count | Tool Size | Physical Length | Rout Path Length | Plated | Hole Type |
|---|---|---|---|---|---|---|
| T | 813 | 0.4mm (15.748mil) | | | PTH | Round |
| S | 78 | 0.5mm (19.685mil) | | | NPTH | Round |
| K | 6 | 0.6mm (23.622mil) | | | PTH | Round |
| E | 2 | 0.65mm (25.591mil) | | | PTH | Round |
| F | 2 | 0.7mm (27.559mil) | | | PTH | Round |
| H | 12 | 0.75mm (29.528mil) | | | PTH | Round |
| G | 36 | 0.8mm (31.496mil) | | | PTH | Round |
| Q | 8 | 0.9mm (35.433mil) | | | PTH | Round |
| B | 1 | 1mm (39.37mil) | | | NPTH | Round |
| D | 17 | 1mm (39.37mil) | | | PTH | Round |
| P | 18 | 1.2mm (47.244mil) | | | PTH | Round |
| M | 2 | 1.5mm (59.055mil) | | | PTH | Round |
| J | 14 | 1.5mm (59.055mil) | | | NPTH | Round |
| L | 2 | 1.6mm (62.992mil) | | | PTH | Round |
| R | 18 | 1.6mm (62.992mil) | | | NPTH | Round |
| O | 20 | 1.7mm (66.929mil) | | | NPTH | Round |
| C | 11 | 2.2mm (86.614mil) | | | PTH | Round |
| A | 27 | 3.2mm (125.984mil) | | | NPTH | Round |
| I | 4 | 4mm (157.48mil) | | | NPTH | Round |
| N | 2 | 0.7mm (27.559mil) | 2.5mm (98.425mil) | 1.8mm (70.866mil) | NPTH | Slot |
| | 1093 Total | | | | | |

Slot definitions : Rout Path Length = Calculated from tool start centre position to tool end centre position.
Physical Length = Rout Path Length + Tool Size = Slot length as defined in the PCB layout

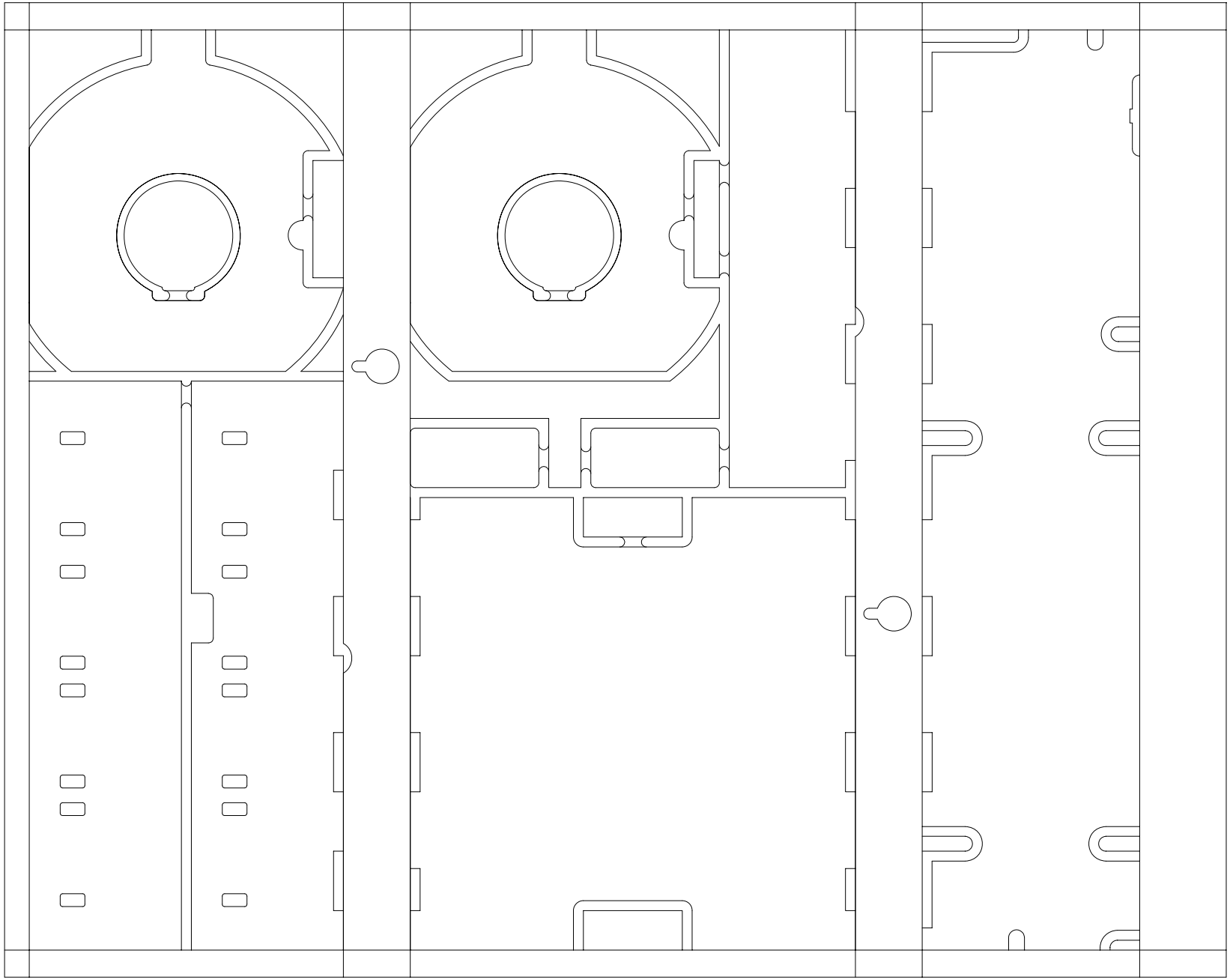

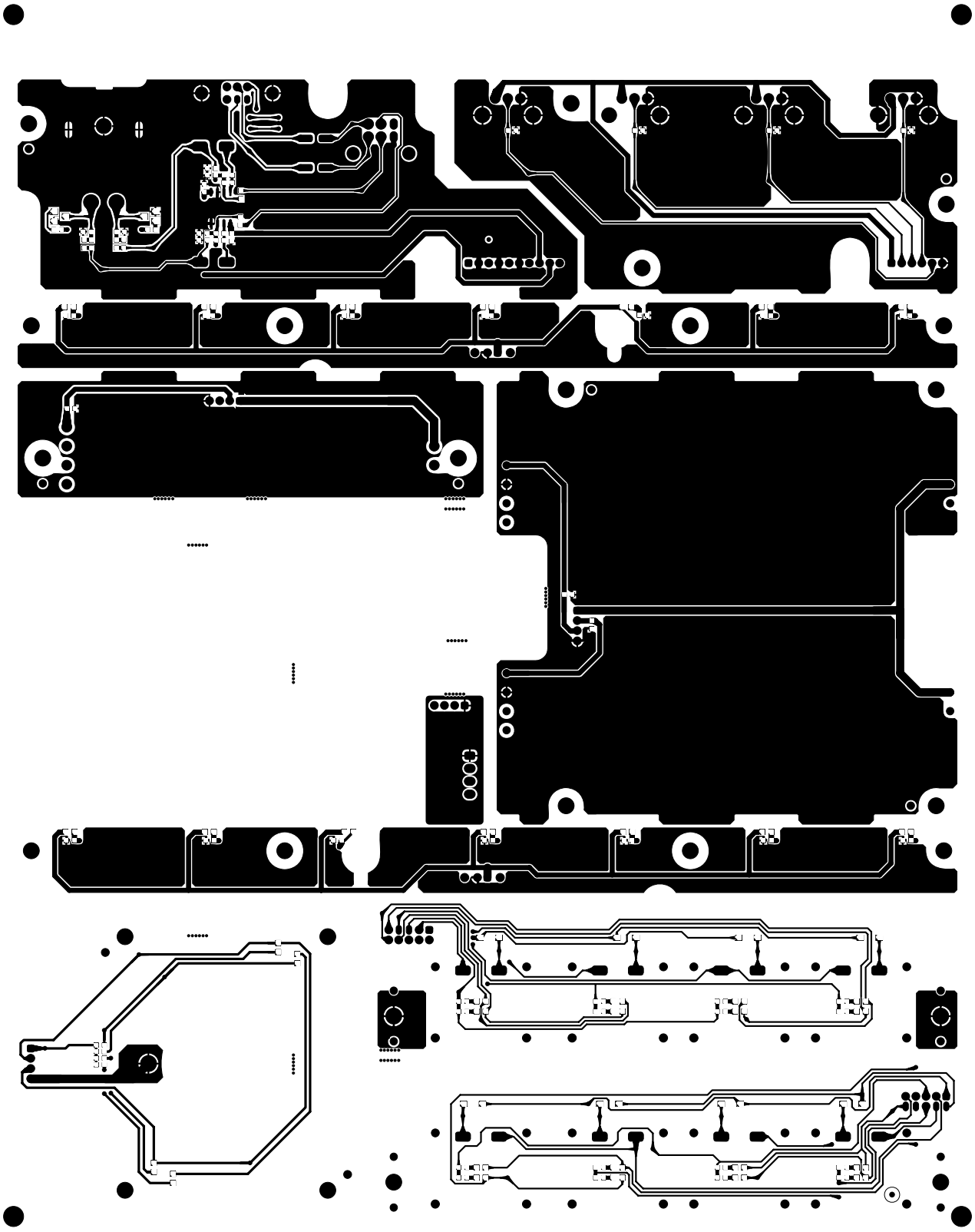

Top Layer

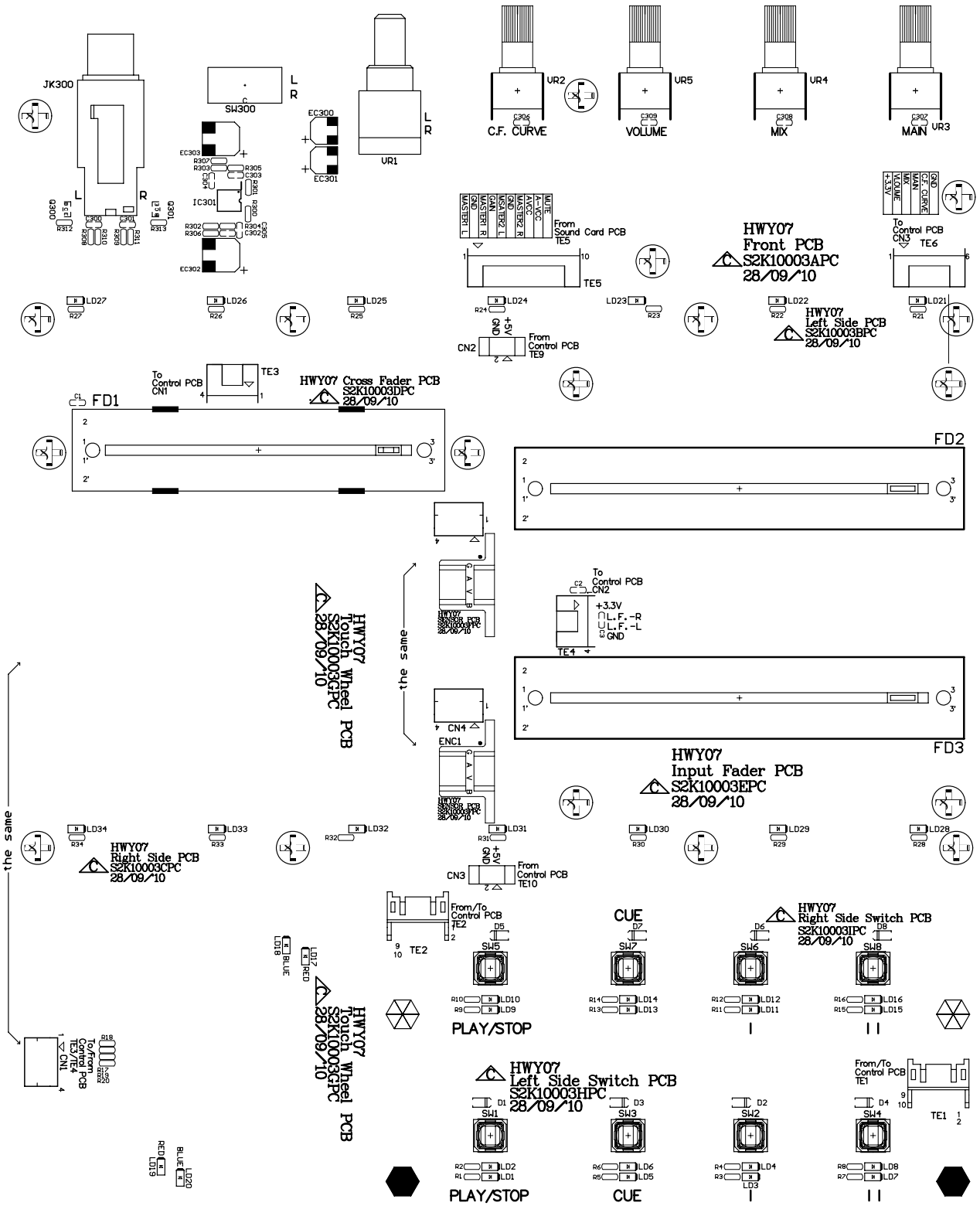


Top Overlay Layer

Top Paste Layer

Top Solder Layer

Bottom solder layer

same as

same as

J928.GTS

28.C