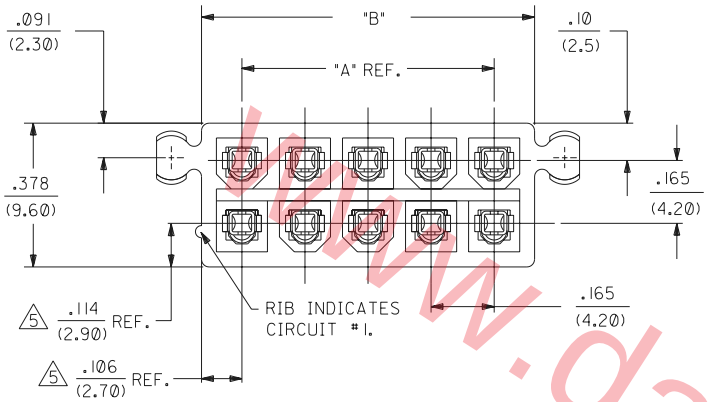

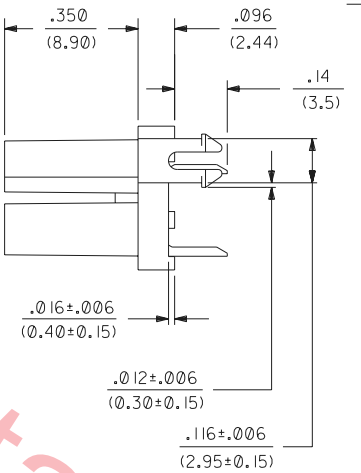

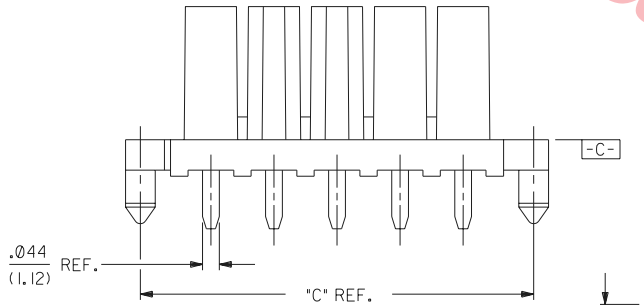

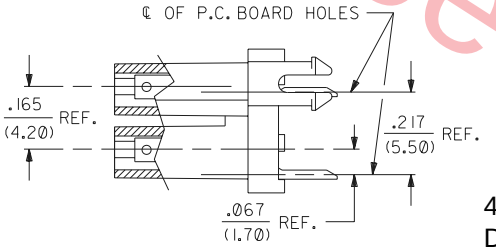

VIEW "A"

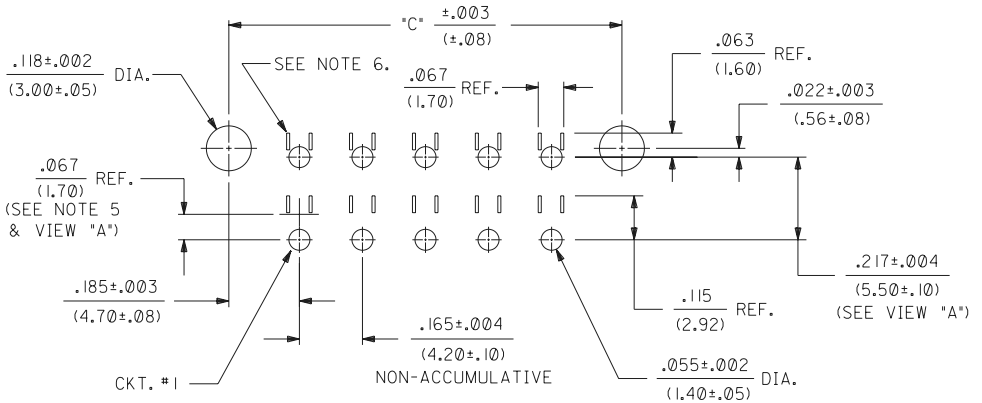

RECOMMENDED HOLE LAYOUT FOR .070/(1.78) MAX. THICK P.C. BOARD

NOTES:

1) HOUSING AND TERMINAL MATERIAL:
   A - HOUSING: NYLON 6/6, U.L. 94V-2, COLOR: NATURAL. TERMINAL: BRASS, ALLOY 260.
   B - HOUSING: NYLON 6/6, U.L. 94V-0, COLOR: NATURAL. TERMINAL: BRASS, ALLOY 260.
   C - HOUSING: NYLON 6/6, U.L. 94V-2, COLOR: NATURAL. TERMINAL: PHOS. BRONZE, ALLOY 510.
   D - HOUSING: NYLON 6/6, U.L. 94V-0, COLOR: NATURAL. TERMINAL: PHOS. BRONZE, ALLOY 510.
2) PART MATES WITH MINI-FIT B.M.I. PLUG #42475, AND HEADERS 42404 AND 42440.
3) PART IS DESIGNED IN METRIC.
4) TERMINAL PLATING:
   1 - .000100/(.00254) MIN. TIN OVER .000050/(.00127) MIN. NICKEL.
   2 - .000030/(.00076) MIN. SELECT GOLD AND .000100/(.00254) MIN. SELECT TIN-LEAD OVER .000050/(.00127) MIN. NICKEL.
   3 - .000100/(.00254) MIN. TIN-LEAD OVER .000050/(.00127) MIN. NICKEL.
   4 - .000050/(.00127) MIN. SELECT GOLD AND .000100/(.00254) MIN. SELECT TIN-LEAD OVER .000050/(.00127) MIN. NICKEL.
5) DIMENSION TO BE USED FOR ALIGNMENT OF CKT. #1 OF MATING CONNECTOR.
6) PHANTOM LINES INDICATE AREAS WHERE TERMINAL STANDOFFS CONTACT P.C. BOARD.
7) A MAXIMUM TOLERANCE OF .050/(1.27) ALLOWS FOR 2 POINTS OF ELECTRICAL CONTACT. A MAXIMUM TOLERANCE OF .020/(.51) ALLOWS FOR 4 POINTS OF CONTACT.
8) .016/(.40) MAX. BOW PER INCH ALLOWABLE AT DATUM -C-
9) PART ALLOWS FOR UP TO .100/(2.54) MISALIGNMENT WITH MATING CONNECTOR.
10) THIS PART CONFORMS TO MOLEX PRODUCT SPEC. NO. PS-5556-0002.
11) CONNECTOR ASSEMBLIES ARE NOT TO BE MATED OR UNMATED WHILE CIRCUITS ARE LIVE.

CIRCUIT SIZE	DIM. "A"	DIM. "B"	DIM. "C"
2	—	.21 (5.4)	.370 (9.40)
4	.165 (4.20)	.38 (9.6)	.535 (13.60)
6	.331 (8.40)	.54 (13.8)	.701 (17.80)
8	.496 (12.60)	.71 (18.0)	.866 (22.00)
10	.661 (16.80)	.87 (22.2)	1.031 (26.20)
12	.827 (21.00)	1.04 (26.4)	1.197 (30.40)
14	.992 (25.20)	1.20 (30.6)	1.362 (34.60)
16	1.157 (29.40)	1.37 (34.8)	1.528 (38.80)
18	1.323 (33.60)	1.54 (39.0)	1.693 (43.00)
20	1.488 (37.80)	1.70 (43.2)	1.858 (47.20)
22	1.654 (42.00)	1.87 (47.4)	2.024 (51.40)
24	1.819 (46.20)	2.03 (51.6)	2.189 (55.60)

Mates with:

42440 Series Vertical Dual Row BMI Header

42404 Series Right Angle Dual Row BMI Header

42475 Series Dual Row BMI Plug with Panel Mount Ears

LEGEND:

A - 42385 - ** * *

BASE NUMBER

CIRCUIT SIZE (02-24)

HOUSING AND TERMINAL MATERIAL (SEE NOTE 1.)

PLATING (SEE NOTE 4.)

MFG.	SH.	REV.	LTR.	REVISIONS
		T4		ADDED EDP'S PER ECN# U80564 MANLAPAZ 9-3-97
		T3		ADDED DIM'S. PER ECN U60956 GEP 2-14-96
		T2		FINAL REL. -04A4 ECN U50883 GEP 3-3-95
		T1		ADDED E.D.P.'S ECN U50718 GEP 1-20-95
		T		.016 WAS .010 ECN U40339 GEP 3-11-94
		S		ADDED ALIGNMENT TOL. ECN U31788 93-12-09 A.GUZIK
		R3		FINAL REL. -18D2 ECN U31513 GEP 10-14-93
		R2		ADDED DIM'S. PER ECN U30702 5-7-93 RJF
		R1		ADDED SHEET 3 ECN U20095 1-22-92 RJF
		R		ADDED NOTE 11 ECN U11700 GEP 8-12-91 RJF
		P		ADDED NOTE 10 ECN U11650 GEP 8-8-91 RJF
4	T2	N		ADDED NOTE 9 ECR U10875 GEP 5-3-91 RJF
3	T4			
2	T1	M		REVISED PER ECR U10854 GEP 4-29-91 RJF
1	T4			

▽ = 0 ▼ = 0 REVISE ONLY ON CAD SYSTEM

DIMENSIONS SHOWN (METRIC) INCH

UNLESS OTHERWISE SPECIFIED TOLERANCES: ANGULAR ± 1/2°

	INCH	METRIC
3 PLACE	± .010	---
2 PLACE	± .015	± .25
1 PLACE	---	± .38

DRAFT WHERE APPLICABLE MUST REMAIN WITHIN DIMENSIONS

DRWG. BY RJF CHK'D. BY JTR

APP'D. BY RAS SCALE 4:1

TITLE: RECEPTACLE HEADER ASSEMBLY (MINI-FIT B.M.I. SERIES)

molex MOLEX INCORPORATED LISLE,ILL. 60532 U.S.A.

SHEET NO. 1 OF 4 DATE 12/9/88

PART NO. SEE SHT.3&4 DRWG. NO. SDA-42385-*

FILE NAME SA42385I DGN

THIS DRAWING CONTAINS INFORMATION THAT IS PROPRIETARY TO MOLEX INC. AND SHOULD NOT BE USED WITHOUT WRITTEN PERMISSION.

DIV. CP SIZE C

www.datasheetdirectory

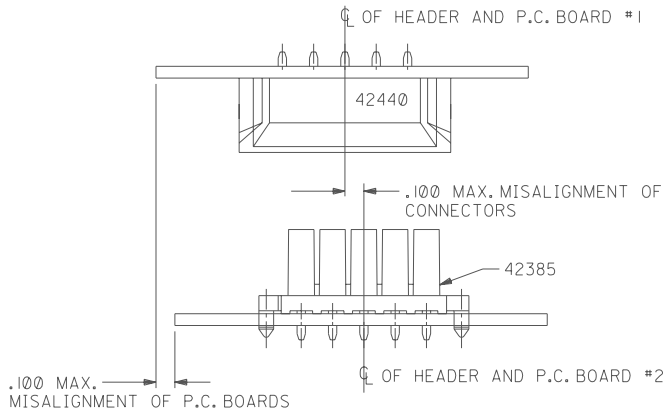

ALIGNMENT TOLERANCES FOR .100 MAX. BOARD-TO-BOARD MISALIGNMENT

(NO CONNECTOR FLOAT)

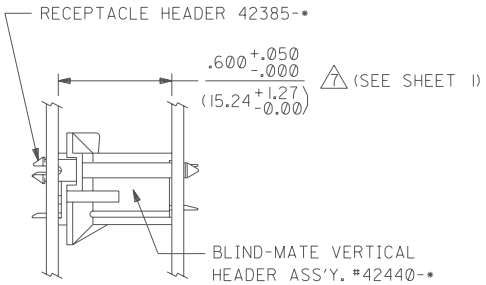

PANEL-TO-P.C.BOARD APPLICATION #1

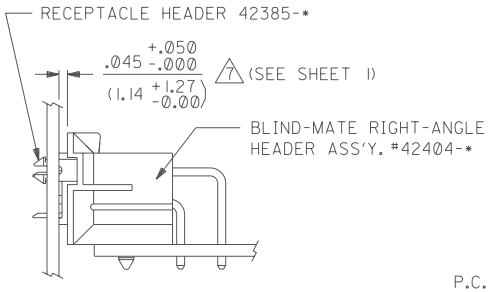

PANEL-TO-P.C.BOARD APPLICATION #2

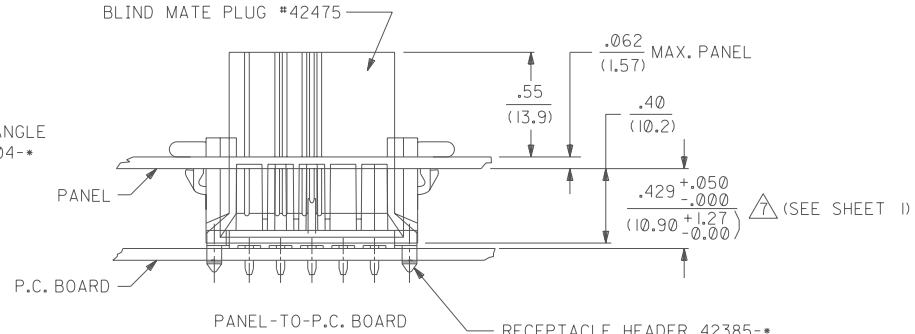

PANEL-TO-P.C. BOARD APPLICATION #3

		K	SEE SHT. 1.
		G	SEE SHT. 1.
		F1	SEE SHT. 1.
		E1	SEE SHT. 1.
T1	SEE SHT. 1.	E	SEE SHT. 1.
S	SEE SHT. 1.	D1	SEE SHT. 1.
R3	SEE SHT. 1.	A	SEE SHT. 1.
LTR.	REVISIONS	LTR.	REVISIONS

DIMENSIONS SHOWN (METRIC) INCH

UNLESS OTHERWISE SPECIFIED TOLERANCES: ANGULAR ± 1/2°

	INCH	METRIC
3 PLACE	± .015	---
2 PLACE	± --	± .38
1 PLACE	---	± --

DRAFT WHERE APPLICABLE MUST REMAIN WITHIN DIMENSIONS

DRWG. BY RJF | CHK'D. BY JTR | APP'D. BY RAS | SCALE 4 : 1

∇ = Ø ▼ = Ø REVISE ONLY ON CAD SYSTEM

TITLE: RECEPTACLE HEADER ASSEMBLIES (MINI-FIT B.M.I. SERIES)

MOLEX INCORPORATED LISLE,ILL. 60532 U.S.A.

SHEET NO. 2 | DATE 12/9/88

PART NO. SEE CHART. | DRWG. NO. SDA-42385-*

FILE NAME SA423852 DGN

THIS DRAWING CONTAINS INFORMATION THAT IS PROPRIETARY TO MOLEX INC. AND SHOULD NOT BE USED WITHOUT WRITTEN PERMISSION.

DIV. CP | SIZE C

42385

PART NUMBER	ENG. NUMBER	CKT. SIZE	HSG./TERM. MATERIAL	TERM. PLATING
NO E.D.P.	A-42385-02B1	2	94V-0,BRASS	TIN OVER NICKEL
15-24-7041	-04B1	4		
15-24-7061	-06B1	6		
NO E.D.P.	-08B1	8		
15-24-7101	-10B1	10		
NO E.D.P.	-12B1	12		
15-24-7141	-14B1	14		
15-24-7161	-16B1	16		
15-24-7181	-18B1	18		
NO E.D.P.	-20B1	20		
NO E.D.P.	-22B1	22		
15-24-7241	A-42385-24B1	24	94V-0,BRASS	TIN OVER NICKEL
NO E.D.P.	A-42385-02B2	2	94V-0,BRASS	30 M.I. SEL. GOLD
15-24-7043	-04B2	4		
15-24-7063	-06B2	6		
NO E.D.P.	-08B2	8		
15-24-7103	-10B2	10		
NO E.D.P.	-12B2	12		
15-24-7143	-14B2	14		
15-24-7163	-16B2	16		
15-24-7183	-18B2	18		
NO E.D.P.	-20B2	20		
NO E.D.P.	-22B2	22		
15-24-7243	A-42385-24B2	24	94V-0,BRASS	30 M.I. SEL. GOLD
NO E.D.P.	A-42385-02D1	2	94V-0/P.B.	TIN OVER NICKEL
NO E.D.P.	-04D1	4		
NO E.D.P.	-06D1	6		
NO E.D.P.	-08D1	8		
NO E.D.P.	-10D1	10		
NO E.D.P.	-12D1	12		
NO E.D.P.	-14D1	14		
NO E.D.P.	-16D1	16		
NO E.D.P.	-18D1	18		
NO E.D.P.	-20D1	20		
NO E.D.P.	-22D1	22		
NO E.D.P.	A-42385-24D1	24	94V-0/P.B.	TIN OVER NICKEL
NO E.D.P.	A-42385-02D2	2	94V-0/P.B.	30 M.I. SEL. GOLD
NO E.D.P.	-04D2	4		
NO E.D.P.	-06D2	6		
NO E.D.P.	-08D2	8		
NO E.D.P.	-10D2	10		
NO E.D.P.	-12D2	12		
NO E.D.P.	-14D2	14		
NO E.D.P.	-16D2	16		
15-24-7187	-18D2	18		
NO E.D.P.	-20D2	20		
NO E.D.P.	-22D2	22		
NO E.D.P.	A-42385-24D2	24	94V-0/P.B.	30 M.I. SEL. GOLD

PART NUMBER	ENG. NUMBER	CKT. SIZE	HSG./TERM. MATERIAL	TERMINAL PLATING
NO E.D.P.	A-42385-02A1	2	94V-2/BRASS	TIN OVER NICKEL
15-24-7040	-04A1	4		
15-24-7060	-06A1	6		
NO E.D.P.	-08A1	8		
15-24-7100	-10A1	10		
NO E.D.P.	-12A1	12		
15-24-7140	-14A1	14		
15-24-7160	-16A1	16		
15-24-7180	-18A1	18		
NO E.D.P.	-20A1	20		
NO E.D.P.	-22A1	22		
15-24-7240	A-42385-24A1	24	94V-2/BRASS	TIN OVER NICKEL
NO E.D.P.	A-42385-02A2	2	94V-2/BRASS	30 M.I. SEL. GOLD
15-24-7042	-04A2	4		
15-24-7062	-06A2	6		
NO E.D.P.	-08A2	8		
15-24-7102	-10A2	10		
NO E.D.P.	-12A2	12		
15-24-7142	-14A2	14		
15-24-7162	-16A2	16		
15-24-7182	-18A2	18		
NO E.D.P.	-20A2	20		
NO E.D.P.	-22A2	22		
15-24-7242	A-42385-24A2	24	94V-2/BRASS	30 M.I. SEL. GOLD
NO E.D.P.	A-42385-02C1	2	94V-2/P.B.	TIN OVER NICKEL
15-24-7044	-04C1	4		
15-24-7064	-06C1	6		
NO E.D.P.	-08C1	8		
15-24-7104	-10C1	10		
NO E.D.P.	-12C1	12		
15-24-7144	-14C1	14		
NO E.D.P.	-16C1	16		
15-24-7184	-18C1	18		
NO E.D.P.	-20C1	20		
NO E.D.P.	-22C1	22		
15-24-7244	A-42385-24C1	24	94V-2/P.B.	TIN OVER NICKEL
NO E.D.P.	A-42385-02C2	2	94V-2/P.B.	30 M.I. SEL. GOLD
NO E.D.P.	-04C2	4		
NO E.D.P.	-06C2	6		
NO E.D.P.	-08C2	8		
NO E.D.P.	-10C2	10		
NO E.D.P.	-12C2	12		
NO E.D.P.	-14C2	14		
NO E.D.P.	-16C2	16		
NO E.D.P.	-18C2	18		
NO E.D.P.	-20C2	20		
NO E.D.P.	-22C2	22		
NO E.D.P.	A-42385-24C2	24	94V-2/P.B.	30 M.I. SEL. GOLD

42385

LTR.	REVISIONS	LTR.	REVISIONS
		K	SEE SHT. 1.
		G	SEE SHT. 1.
		F1	SEE SHT. 1.
T4	SEE SHT. 1.	E1	SEE SHT. 1.
T1	SEE SHT. 1.	E	SEE SHT. 1.
S	SEE SHT. 1.	D1	SEE SHT. 1.
R3	SEE SHT. 1.	A	SEE SHT. 1.

WORK AREA PLOT

DIMENSIONS SHOWN (METRIC) INCH
UNLESS OTHERWISE SPECIFIED TOLERANCES: ANGULAR ± 1/2°

	INCH	METRIC
3 PLACE	± ---	---
2 PLACE	± ---	± ---
1 PLACE	---	± ---

DRAFT WHERE APPLICABLE MUST REMAIN WITHIN DIMENSIONS

DRWG. BY RJF | CHK'D. BY JTR | APP'D. BY RAS | SCALE :

REVISE ONLY ON CAD SYSTEM

TITLE: RECEPTACLE HEADER ASSEMBLIES (MINI-FIT B.M.I. SERIES)

MOLEX INCORPORATED LISLE, ILL. 60532 U.S.A.

SHEET NO. 3 | DATE 12 / 9 /88

PART NO. SEE CHART. | DRWG. NO. SDA-42385-*

FILE NAME SA423853 DGN | DIV. CO | SIZE C

THIS DRAWING CONTAINS INFORMATION THAT IS PROPRIETARY TO MOLEX INC. AND SHOULD NOT BE USED WITHOUT WRITTEN PERMISSION.

42385

PART NUMBER	ENG. NUMBER	CKT. SIZE	HSG./TERM. MATERIAL	TERMINAL PLATING
NO E.D.P.	A-42385-02D4	2	94V-0/P.B.	50 M.I. SEL. GOLD
NO E.D.P.	-04D4	4		
NO E.D.P.	-06D4	6		
NO E.D.P.	-08D4	8		
NO E.D.P.	-10D4	10		
NO E.D.P.	-12D4	12		
NO E.D.P.	-14D4	14		
NO E.D.P.	-16D4	16		
NO E.D.P.	-18D4	18		
NO E.D.P.	-20D4	20		
NO E.D.P.	-22D4	22		
NO E.D.P.	A-42385-24D4	24	94V-0/P.B.	50 M.I. SEL. GOLD

PART NUMBER	ENG. NUMBER	CKT. SIZE	HSG./TERM. MATERIAL	TERMINAL PLATING
NO E.D.P.	A-42385-02A3	2	94V-2/BRASS	TIN-LEAD OVER NICKEL
NO E.D.P.	-04A3	4		
NO E.D.P.	-06A3	6		
NO E.D.P.	-08A3	8		
NO E.D.P.	-10A3	10		
NO E.D.P.	-12A3	12		
NO E.D.P.	-14A3	14		
NO E.D.P.	-16A3	16		
NO E.D.P.	-18A3	18		
NO E.D.P.	-20A3	20		
NO E.D.P.	-22A3	22		
NO E.D.P.	A-42385-24A3	24	94V-2/BRASS	TIN-LEAD OVER NICKEL

PART NUMBER	ENG. NUMBER	CKT. SIZE	HSG./TERM. MATERIAL	TERMINAL PLATING
NO E.D.P.	A-42385-02A4	2	94V-2/BRASS	50 M.I. SEL. GOLD
15-24-3048	-04A4	4		
NO E.D.P.	-06A4	6		
NO E.D.P.	-08A4	8		
NO E.D.P.	-10A4	10		
NO E.D.P.	-12A4	12		
NO E.D.P.	-14A4	14		
NO E.D.P.	-16A4	16		
NO E.D.P.	-18A4	18		
NO E.D.P.	-20A4	20		
NO E.D.P.	-22A4	22		
NO E.D.P.	A-42385-24A4	24	94V-2/BRASS	50 M.I. SEL. GOLD

PART NUMBER	ENG. NUMBER	CKT. SIZE	HSG./TERM. MATERIAL	TERMINAL PLATING
NO E.D.P.	A-42385-02B4	2	94V-0/BRASS	50 M.I. SEL. GOLD
NO E.D.P.	-04B4	4		
NO E.D.P.	-06B4	6		
NO E.D.P.	-08B4	8		
NO E.D.P.	-10B4	10		
NO E.D.P.	-12B4	12		
NO E.D.P.	-14B4	14		
NO E.D.P.	-16B4	16		
NO E.D.P.	-18B4	18		
NO E.D.P.	-20B4	20		
NO E.D.P.	-22B4	22		
NO E.D.P.	A-42385-24B4	24	94V-0/BRASS	50 M.I. SEL. GOLD

PART NUMBER	ENG. NUMBER	CKT. SIZE	HSG./TERM. MATERIAL	TERMINAL PLATING
NO E.D.P.	A-42385-02C4	2	94V-2/P.B.	50 M.I. SEL. GOLD
NO E.D.P.	-04C4	4		
NO E.D.P.	-06C4	6		
NO E.D.P.	-08C4	8		
NO E.D.P.	-10C4	10		
NO E.D.P.	-12C4	12		
NO E.D.P.	-14C4	14		
NO E.D.P.	-16C4	16		
NO E.D.P.	-18C4	18		
NO E.D.P.	-20C4	20		
NO E.D.P.	-22C4	22		
NO E.D.P.	A-42385-24C4	24	94V-2/P.B.	50 M.I. SEL. GOLD

42385

LTR.	REVISIONS	LTR.	REVISIONS
		T2	SEE SHT. 1
		S	SEE SHT. 1
		R1	SEE SHT. 1

DD-MMM-YYYY
HH:MM
WORKAREA
PLOT
GRP$$$$USERNAME$$

DIMENSIONS SHOWN (METRIC) INCH

UNLESS OTHERWISE SPECIFIED
TOLERANCES: ANGULAR ± 1/2°

	INCH	METRIC
3 PLACE	± .010	---
2 PLACE	± --	± .25
1 PLACE	---	± --

DRAFT WHERE APPLICABLE MUST REMAIN WITHIN DIMENSIONS

DRWG. BY RJF | CHK'D. BY JTR
APP'D. BY RAS | SCALE :

C = 0 ▼ = 0 | REVISE ONLY ON CAD SYSTEM

TITLE
RECEPTACLE HEADER ASSEMBLIES (MINI-FIT JR. SERIES)

molex MOLEX INCORPORATED LISLE, ILL. 60532 U.S.A.

SHEET NO. 4 | DATE 1/21/92

PART NO. SEE CHART. | DRWG. NO. SDA-42385-*

FILE NAME SA423854 DGN

THIS DRAWING CONTAINS INFORMATION THAT IS PROPRIETARY TO MOLEX INC. AND SHOULD NOT BE USED WITHOUT WRITTEN PERMISSION.

DIV. CP | SIZE C