Designing With the SN74AHC123A and SN74AHCT123A

Datasheet.Directory

SCLA014
October 1999

Texas Instruments

IMPORTANT NOTICE

Texas Instruments and its subsidiaries (TI) reserve the right to make changes to their products or to discontinue any product or service without notice, and advise customers to obtain the latest version of relevant information to verify, before placing orders, that information being relied on is current and complete. All products are sold subject to the terms and conditions of sale supplied at the time of order acknowledgement, including those pertaining to warranty, patent infringement, and limitation of liability.

TI warrants performance of its semiconductor products to the specifications applicable at the time of sale in accordance with TI's standard warranty. Testing and other quality control techniques are utilized to the extent TI deems necessary to support this warranty. Specific testing of all parameters of each device is not necessarily performed, except those mandated by government requirements.

CERTAIN APPLICATIONS USING SEMICONDUCTOR PRODUCTS MAY INVOLVE POTENTIAL RISKS OF DEATH, PERSONAL INJURY, OR SEVERE PROPERTY OR ENVIRONMENTAL DAMAGE ("CRITICAL APPLICATIONS"). TI SEMICONDUCTOR PRODUCTS ARE NOT DESIGNED, AUTHORIZED, OR WARRANTED TO BE SUITABLE FOR USE IN LIFE-SUPPORT DEVICES OR SYSTEMS OR OTHER CRITICAL APPLICATIONS. INCLUSION OF TI PRODUCTS IN SUCH APPLICATIONS IS UNDERSTOOD TO BE FULLY AT THE CUSTOMER'S RISK.

In order to minimize risks associated with the customer's applications, adequate design and operating safeguards must be provided by the customer to minimize inherent or procedural hazards.

TI assumes no liability for applications assistance or customer product design. TI does not warrant or represent that any license, either express or implied, is granted under any patent right, copyright, mask work right, or other intellectual property right of TI covering or relating to any combination, machine, or process in which such semiconductor products or services might be or are used. TI's publication of information regarding any third party's products or services does not constitute TI's approval, warranty or endorsement thereof.

Copyright © 1999, Texas Instruments Incorporated

Contents

Title *Page*

Abstract **1**

Introduction **1**
Features 1

Rules for Operation **3**
Output Pulse Duration 3
Calculations 4
Retriggering Data 6
Variation in Output Pulse Duration Due to Temperature and V_{CC} Levels 7

Special Considerations **8**
Setup Guidelines 8
Distribution of Units 8

Applications **9**
Delayed-Pulse Generator With Override 9
Missing-Pulse Generator 10
Low-Power Pulse Generator 11
Negative- or Positive-Edge-Triggered One-Shot Multivibrator 12
Pulse-Duration Detector 13
Frequency Discriminator 14

Conclusion **14**

Acknowledgments **14**

References **14**

Appendix A **15**
One-Shot Monostable Multivibrator 15

List of Illustrations

Figure *Title* *Page*

1 SN74AHC123A and SN74AHCT123A Logic Diagram for Each Multivibrator 2
2 Timing Component Connections 3
3 Output Pulse Duration vs External Timing Capacitance 4
4 External Capacitance vs Multiplier Factor 4
5 Retrigger Pulse Duration 6
6 Input/Output Requirements 6
7 Variations in Output Pulse Duration for Various Temperatures and V_{CC} Levels 7
8 Distribution of Units vs Output Pulse Duration 8
9 Delayed-Pulse Generator With Override 9
10 Missing-Pulse Detector 10
11 Low-Power Pulse Generator 11
12 Negative- or Positive-Edge-Triggered One-Shot Multivibrator 12
13 Pulse-Duration Detector 13
14 Frequency-Discriminator Circuit 14
A–1 One-Shot Monostable Multivibrator and Function Block Diagram 16

Abstract

This application report is designed to answer any questions that the user may have on the operation of the SN74AHC/AHCT123A. It also covers the most frequently asked questions and includes detailed instructions on how to calculate the external components required to make the device function correctly. Several circuits using this device also are included to show the versatility of operations that can be performed using this part.

Introduction

The SN74AHC123A and SN74AHCT123A are dual, retriggerable, monostable multivibrators (see Appendix A) that have similar functions. The SN74AHCT123A has TTL inputs and CMOS outputs. The SN74AHC123A has CMOS inputs and outputs. These devices require external resistors and capacitors for proper operation, and the resulting RC time constant determines the output pulse duration. These devices are capable of very-long-duration output pulses by retriggering the inputs at appropriate times. An input clear can be used to decrease the output pulse duration. This application report discusses the following points:

- Rules for operation, which include the output pulse duration, its calculation, and retriggering data
- Setup of the device in relation to its external components and the variation from unit to unit
- Applications

Features

Features of these devices are:

- Retriggerable
- Edge triggered from active-high or active-low logic inputs
- Inputs are TTL-voltage compatible for the SN74AHCT123A.
- V_{CC} range of the SN74AHC123A is 2 V to 5.5 V.
- V_{CC} range of the SN74AHCT123A is 4.5 V to 5.5 V.
- Clear ($\overline{CLR}$) input overrides the other inputs ($\overline{A}$ and B).
- When inputs $\overline{A}$ and B have pulses applied to them, the signal that occurs first determines the pulse that triggers the output.
- Three inputs ($\overline{A}$, B, and $\overline{CLR}$) have Schmitt triggers with sufficient hysteresis to handle slow input transition rates with jitter-free triggering at the output.

Figure 1 illustrates the logic diagram for both devices. Each multivibrator has two inputs, one that is active low and the other that is active high, allowing leading- and trailing-edge triggering. The output pulse duration can be increased by retriggering the input signal in use. The retrigger pulses at the input must occur after a certain period to be recognized and acted upon by the device. If the input retrigger pulse follows the initial input pulse after 0.30 × the initial output pulse duration, the output is retriggered. $\overline{CLR}$ terminates the output pulse at any time.

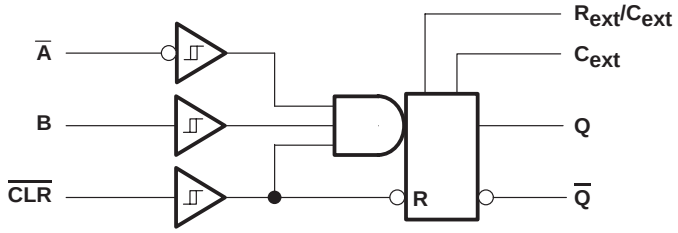

Figure 1. SN74AHC123A and SN74AHCT123A Logic Diagram for Each Multivibrator

Table 1. Function Table for the SN74AHC123A and SN74AHCT123A

INPUTS			OUTPUTS	
$\overline{CLR}$	$\overline{A}$	B	Q	$\overline{Q}$
L	X	X	L	H
X	H	X	L†	H†
X	X	L	L†	H†
H	L	↑	⎍	⎏
H	↓	H	⎍	⎏
↑	L	H	⎍	⎏

† These outputs are based on the assumption that the indicated steady-state conditions at the A and B inputs have been set up long enough to complete any pulse started before the setup.

Rules for Operation

Proper use depends on observing these rules of operation:

- Minimum value of external resistance (R_T) is 250 Ω.
- External capacitance (C_T) can have any value.
- Input voltage range is from 0 V to 5.5 V.
- SN74AHC123A V_{CC} must be 2 V to 5.5 V, and SN74AHCT123A V_{CC} must be 4.5 V to 5.5 V.
- SN74AHC123A and SN74AHCT123 T_A can be between –40°C and 85°C.
- A switching diode on one side of the capacitor is not needed for the timing scheme.
- Required connections of R_T and C_T, for the proper operation of the devices, are shown in Figure 2. C_T can be grounded at the C_{ext} terminal.

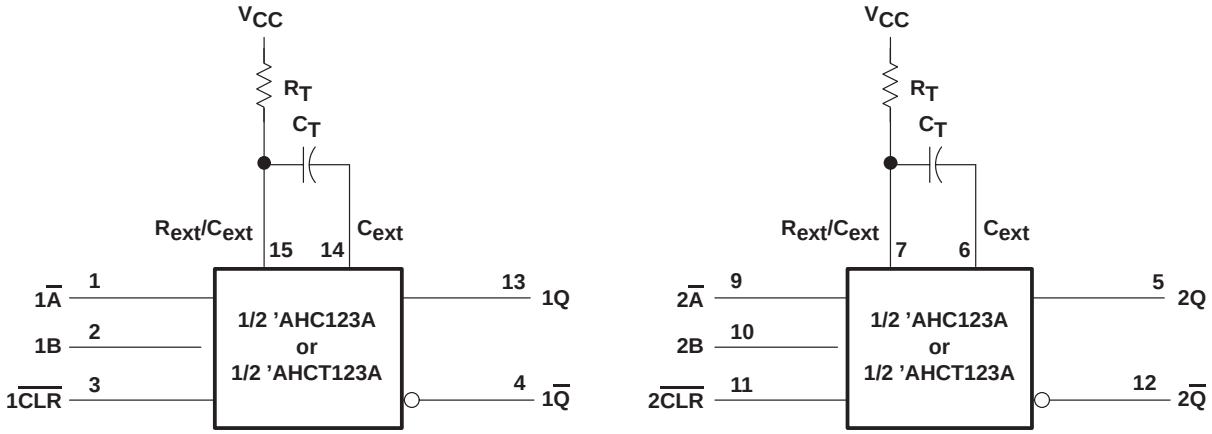

Figure 2. Timing Component Connections

Output Pulse Duration

The output pulse duration (t_w) for both devices is determined primarily by the values of C_T and R_T. The timing components are connected as shown in Figure 2.

The definition of the output pulse duration is shown in equation 1.

$$t_w = K \times R_T \times C_T \quad (1)$$

Where:

t_w = pulse duration in ns
K = multiplier factor
R_T = external timing resistance in kΩ
C_T = external capacitance in pF

If:
C_T is ≥1000 pF, K = 1.0
C_T is <1000 pF, K can be determined from Figure 3

The minimum output pulse duration, using the minimum value of external resistance (250 Ω) and a minimum value of external capacitance (open air), is approximately 290 ns.

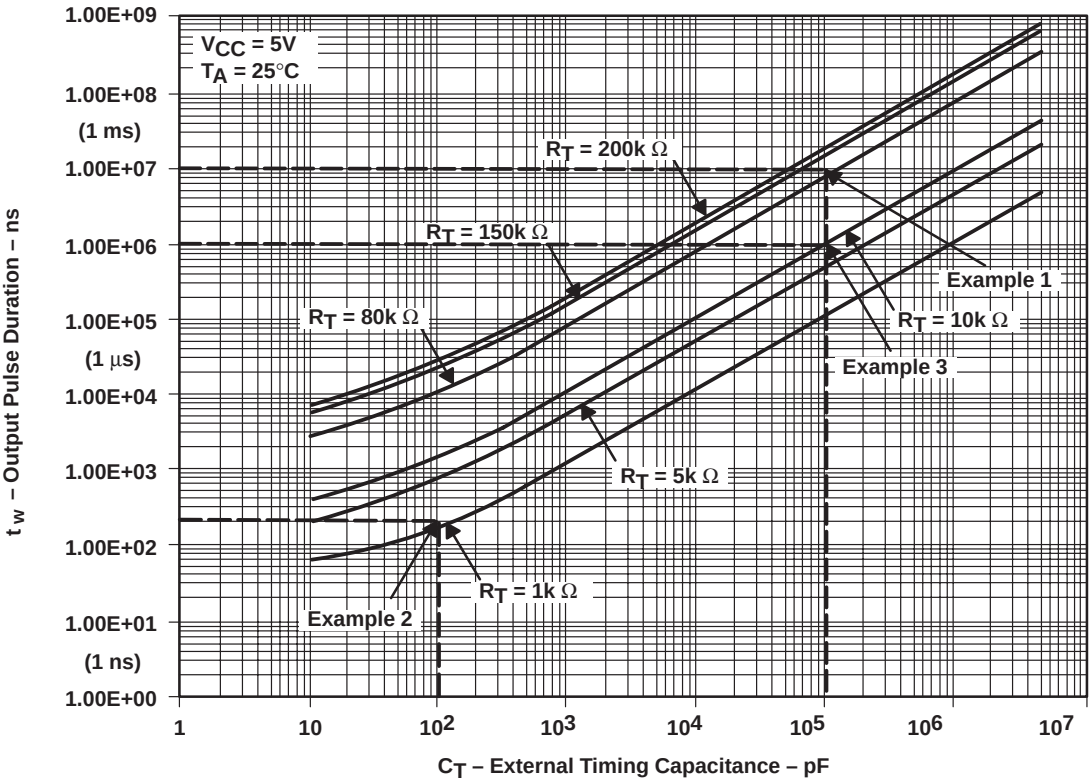

Figure 3. Output Pulse Duration vs External Timing Capacitance

Calculations

Equation 1 and Figure 3 can be used to determine values for output pulse duration and external resistance and capacitance values for the SN74AHC123A and SN74AHCT123A.

Equation 1 and Figures 3 and 4 can be used to solve the following problems.

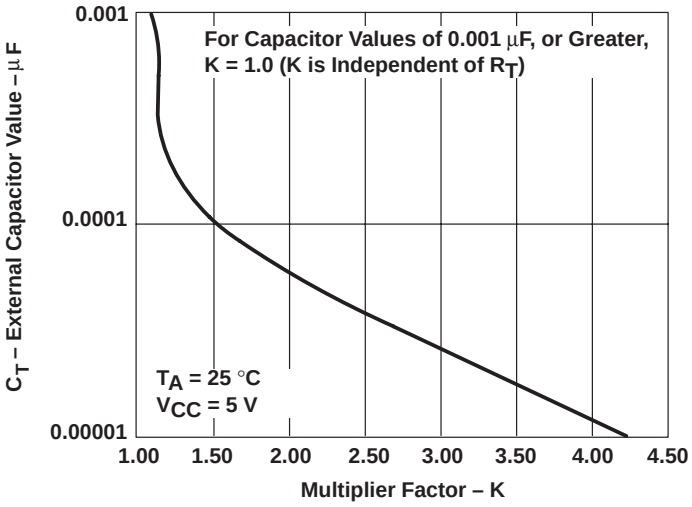

Figure 4. External Capacitance vs Multiplier Factor

- Pulse duration for a given external resistance and capacitance

  For example, if an 80-kΩ resistor and a 100-nF capacitor are used, the pulse duration is obtained by following the R_T = 80-kΩ curve to the line indicating that C_T = 100 nF. The y (vertical) coordinate of this point gives the value of the pulse duration, which is approximately 8×10^6 ns (8 ms).

  The pulse duration (t_w) for an external resistance of 80 kΩ and a capacitor of 100 nF is:

  $$t_w = 1.0 \times 80\ k\Omega \times 1 \times 10^5\ pF = 8 \times 10^6\ ns = 8\ ms \quad (K = 1.0 \text{ because } C_T \text{ is greater than } 1000\ pF) \tag{2}$$

  This value was obtained graphically in Figure 3.

- Required external resistance for a given pulse duration and external capacitance

  If a pulse duration of 200 ns is desired and a timing capacitance of 100 pF is used, the resistance needed is found where the horizontal line of 200 ns on the t_w axis intersects 100 pF on the C_T axis. This point may be along one of the curves and, in this case, the point is slightly above the R_T = 1-kΩ curve. So the required resistance is approximately 1.3 kΩ.

  The required external resistance (R_T) that produces a pulse duration of 200 ns with a 100-pF external capacitor is:

  $$R_T = \frac{t_w}{K \times C_T} = \frac{200\ ns}{1.5 \times 100\ pF} = 1.3\ k\Omega \tag{3}$$

  Because C_T < 1000 pF, use Figure 4 to find the value of K. Follow the t_w = 100-pF horizontal line from the vertical axis to the curve, then drop a vertical line to the C_T axis. The intersection on the C_T axis gives the K value; in this case, K = 1.5.

  This value of R_T is approximately equal to the value of R_T as given in Figure 3.

- Required external capacitance for a certain pulse duration and external resistance

  For example, if C_T = 10 kΩ and a pulse duration of 1×10^6 ns is desired, the timing capacitance required can be obtained by finding the point where $t_w = 1 \times 10^6$ ns (from the vertical axis) intersects the 10-kΩ curve. This point is then dropped vertically, to cross the horizontal axis at $C_T = 1 \times 10^5$ pF (100 nF).

  The external capacitance (C_T) that produces an output pulse duration of 1×10^6 ns, with a timing resistance of 10 kΩ, is:

  $$C_T = \frac{t_w}{K \times R_T} = \frac{1 \times 10^6\ ns}{1.0 \times 10\ k\Omega} = 1 \times 10^5\ pF = 100\ nF \tag{4}$$

  The value of capacitance is unknown; therefore, the explanation following equation 1 cannot be used directly to find a value for K. Figure 4 must be studied to determine a value for K. Using Figure 3, the maximum value for a 1000-pF capacitor and 200 kΩ resistor is about 2×10^5 ns, which is much lower than the desired output pulse duration of 1×10^6 ns for this application. It can be concluded that the external capacitance is larger than 1000 pF and K = 1.0.

  The value of C_T here is the same as that in Figure 3.

Retriggering Data

The retrigger pulse duration is calculated as shown in Figure 5.

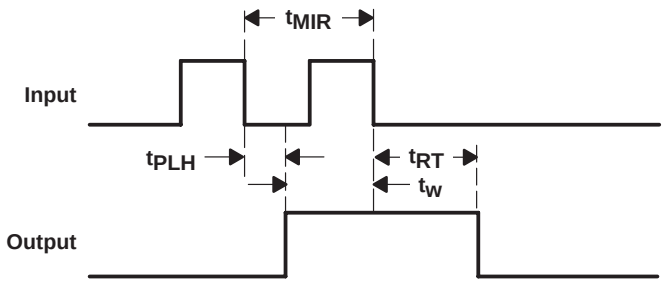

$$t_{RT} = t_W + t_{PLH} = K \times R_T \times C_T + t_{PLH}$$

Where:

t_{MIR} = Minimum Input Retriggering Time
t_{PLH} = Propagation Delay
t_{RT} = Retrigger Time
t_W = Output Pulse Duration Before Retriggering

Figure 5. Retrigger Pulse Duration

t_{MIR} is the minimum time required after the initial signal before retriggering the input. After t_{MIR}, the device retriggers the output. Experimentally, it also can be shown that, to retrigger the output pulse, the two adjacent input signals should be t_{MIR} apart, where $t_{MIR} = 0.30 \times t_w$.

The minimum value from the end of the input pulse to the beginning of the retriggered output should be approximately 15 ns to ensure a retriggered output. This is illustrated in Figure 6.

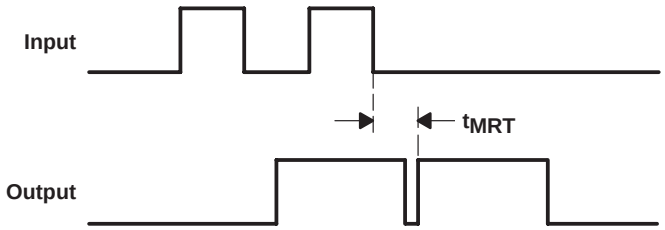

t_{MRT} = Minimum Time Between the End of the Second Input Pulse and the Beginning of the Retriggered Output
t_{MRT} = 15 ns

Figure 6. Input/Output Requirements

Variation in Output Pulse Duration Due to Temperature and V_{CC} Levels

Figure 7 shows the percentage variation in the output pulse duration due to temperature and V_{CC} of the devices. All points on the graph are plotted relative to T_A = 25°C and V_{CC} = 5 V (which is assumed to be 0% variation). For example, according to Figure 7, at a temperature of 40°C and a V_{CC} level of 4 V, the value of the output pulse duration differs by 2% from the reading at V_{CC} = 5 V and T_A = 25°C.

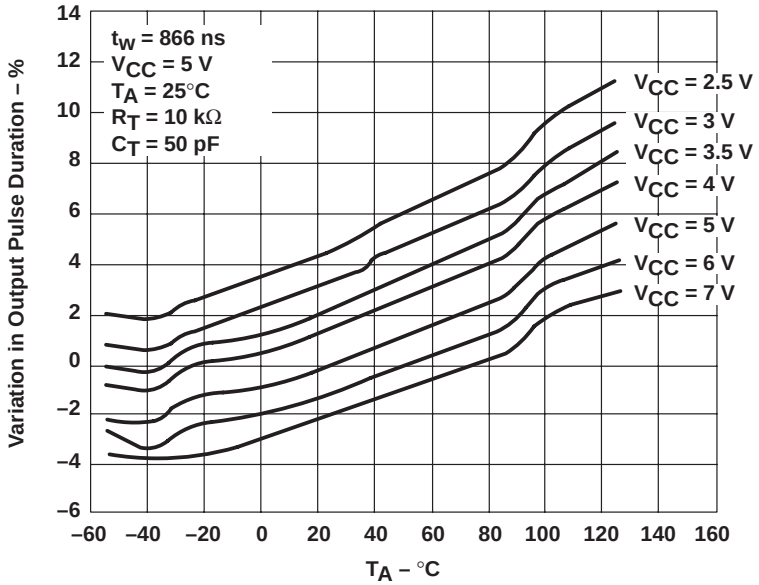

Figure 7. Variations in Output Pulse Duration for Various Temperatures and V_{CC} Levels

Special Considerations

Setup Guidelines[1]

Because the SN74AHC123A and SN74AHCT123A monostable multivibrators are half analog and half digital and are inherently more sensitive to noise on the analog portion (timing leads) than standard digital circuits, they should not be located near noise-producing sources or transient-carrying conductors. Liberal power-supply bypassing is recommended for greater reliability and repeatability. Also, a monostable multivibrator should not be used as a solution for asynchronous systems; synchronous design techniques always provide better performance. For time delays over 1.5 seconds or timing capacitors over 100 µF, it usually is better to use a free-running astable multivibrator and two inexpensive decade counters (such as a 7490A) to generate the equivalent of a long-delay one-shot multivibrator. Astable oscillators made with monostable building blocks have stabilities approaching 5 parts in 100, and should not be used if system timing is critical. Crystal oscillators provide better stability.

In all one-shot multivibrator applications, follow these guidelines:

- Use good high-frequency 0.1-µF (ceramic disk) capacitors, located 1 to 2 inches from the monostable package, to bypass V_{CC} to ground.
- Keep timing components (R_T, C_T) close to the package and away from high-transient-voltage or current-carrying conductors.
- Keep the Q output trace away from the $\overline{CLR}$ lead; when the one-shot multivibrator times out, the negative-going edge may cause the $\overline{CLR}$ lead to be pulled down, restarting the cycle. If this happens, constantly high (Q = H, $\overline{Q}$ = L) outputs with 50-ns low spikes occur at the repetition rate determined by R_T and C_T. If sufficient trace isolation cannot be obtained, a 50-pF capacitor, bypassing the $\overline{CLR}$ lead to ground, usually eliminates the problem.
- Beware of using the diode or transistor protective arrangement when retriggerable operation is required; the second output pulse may be shorter due to excess charge left on the capacitor. This may result in early timeout and apparent failure of retriggerable operation. Use a capacitor that is able to withstand 1 V in reverse and meet the leakage-current requirements of the particular one-shot multivibrator.
- Remember that the timing equation associated with each device has a prediction accuracy.

Distribution of Units

Figure 8 shows the variation in the output pulse duration for a random sample of both devices. The average pulse width of the output is 856 ns, with a standard deviation of 3.5 ns. The median has the same value as the mean. There also is a high frequency of finding units with an average output pulse duration. A unit with the median-value pulse duration was tested to obtain the plots in Figures 3, 4, 7, and 8.

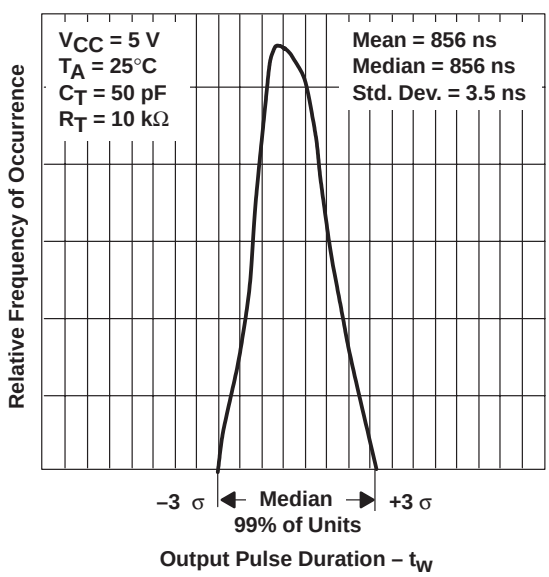

Figure 8. Distribution of Units vs Output Pulse Duration

Applications

Delayed-Pulse Generator With Override[1]

In Figure 9, the value of the delay time depends on the values of R_{T1} and C_{T1} in the first one-shot multivibrator (OS_1). The second one-shot multivibrator (OS_2) determines the output pulse duration that is defined by the values of R_{T2} and C_{T2}. A positive rising pulse into the override circuit can terminate the output pulse at any time.

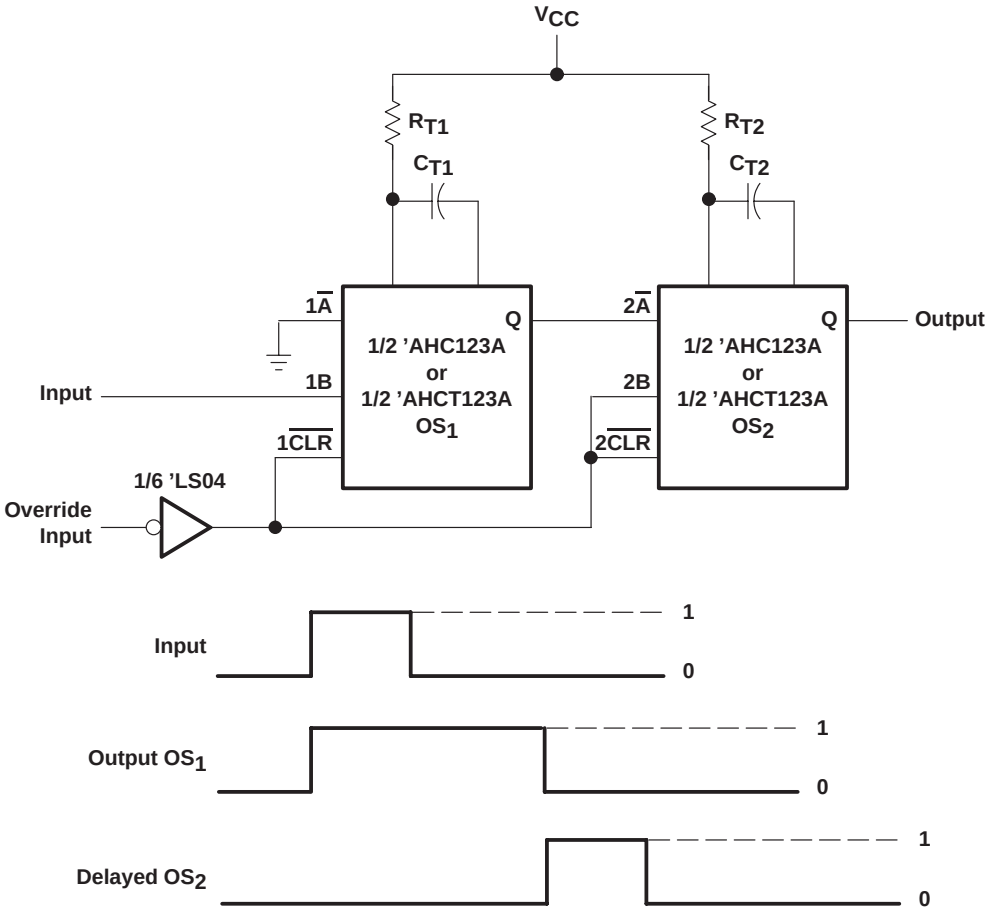

Figure 9. Delayed-Pulse Generator With Override

Missing-Pulse Generator[1]

The external resistance (R_{T1}) and the external capacitance (C_{T1}) determine the pulse duration of OS_1. This pulse duration is set to be greater than one-half of the incoming frequency. A transition from low to high logic on the incoming pulse sets the output of OS_1 to a high logic level. The output of OS_1 remains high as long as the input pulse consistently switches from high to low to high logic at regular intervals. This implies that the one-shot multivibrator is being retriggered. If there is a missing pulse in the pulse train of the input, the output of OS_1 falls to a low logic level and the output of OS_2 rises to a high level (see Figure 10).

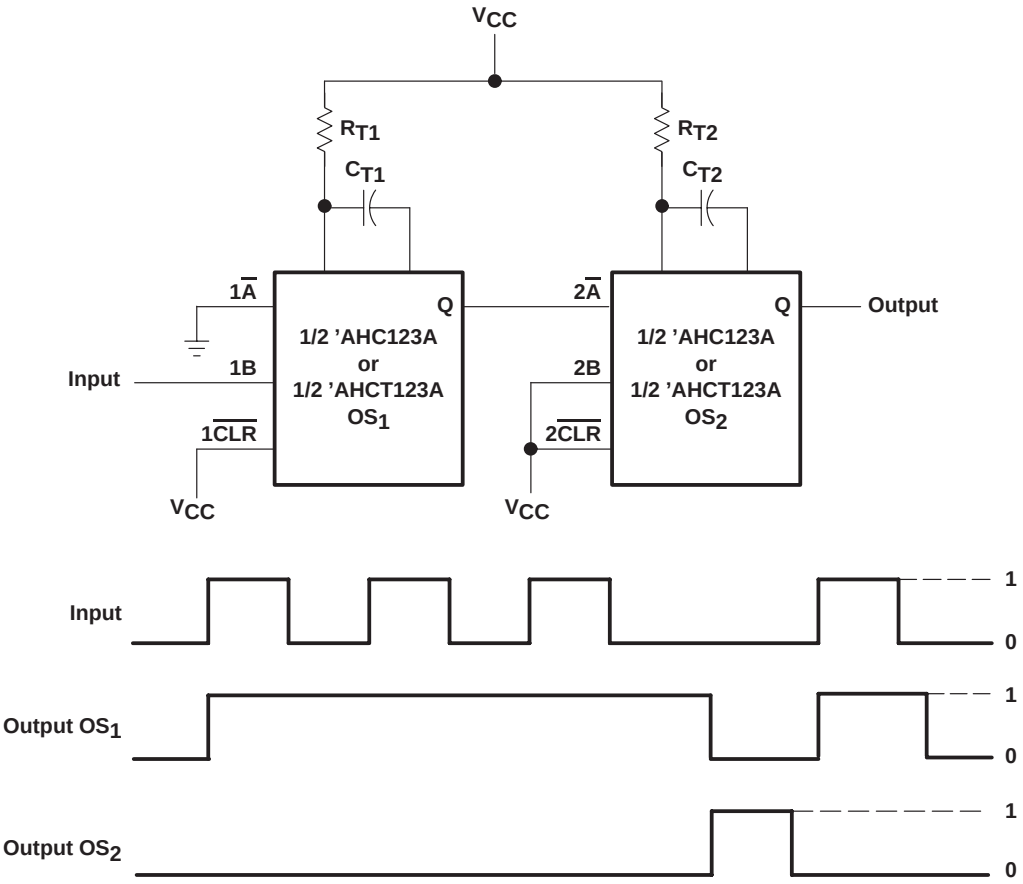

Figure 10. Missing-Pulse Detector

Low-Power Pulse Generator[1]

In Figure 11, the first one-shot multivibrator (OS_1) is responsible for the output frequency of the generator. The external resistance (R_{T1}) and the external capacitance (C_{T1}) determine the frequency. The OS_2 configuration gives rise to the output pulse duration, which is determined by R_{T2} and C_{T2}.

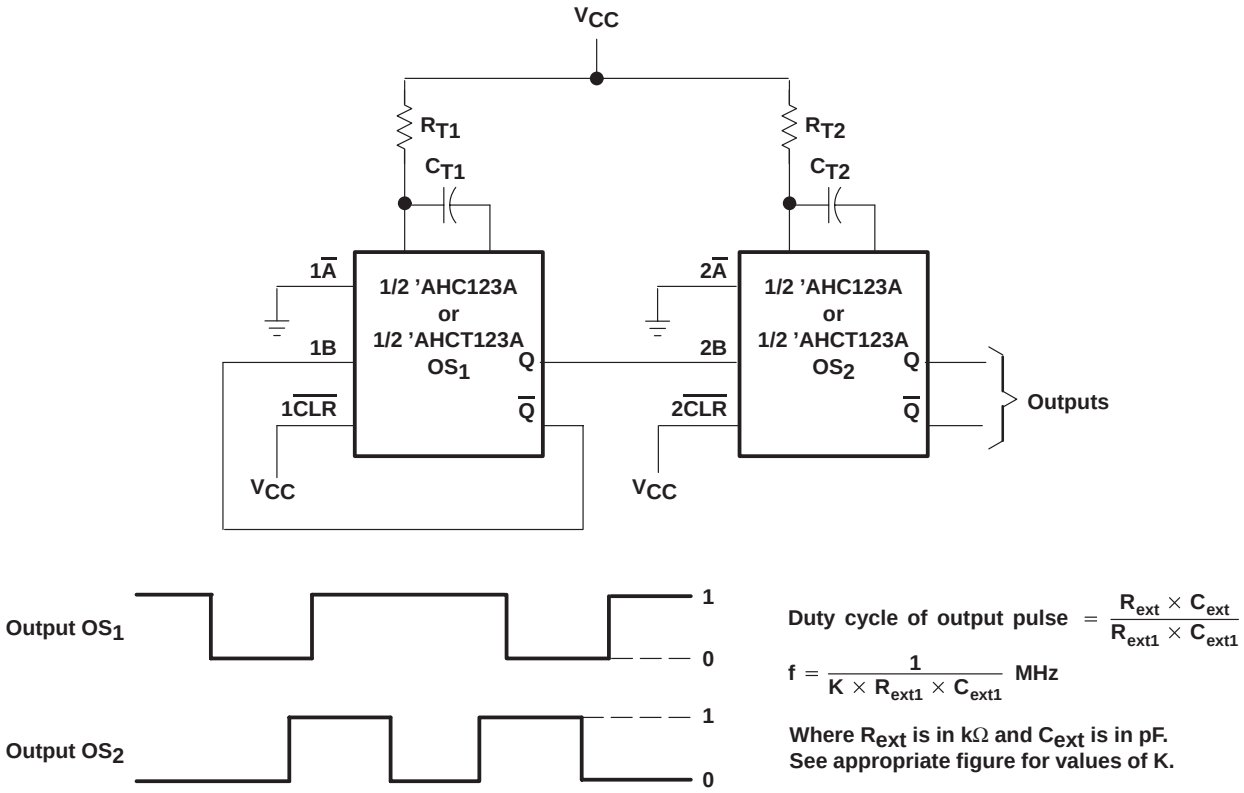

$$\text{Duty cycle of output pulse} = \frac{R_{ext} \times C_{ext}}{R_{ext1} \times C_{ext1}}$$

$$f = \frac{1}{K \times R_{ext1} \times C_{ext1}} \text{ MHz}$$

Where R_{ext} is in kΩ and C_{ext} is in pF.
See appropriate figure for values of K.

Figure 11. Low-Power Pulse Generator

Negative- or Positive-Edge-Triggered One-Shot Multivibrator[1]

The circuit in Figure 12 is arranged such that a negative-going input pulse causes a low-to-high-to-low pulse on OS_1. A positive-going input pulse causes a low-to-high-to-low pulse on OS_2. The outputs of OS_1 and OS_2 are connected to an OR gate that outputs a pulse when OS_1 or OS_2 switches. The circuit in Figure 12 also can be used as a frequency doubler.

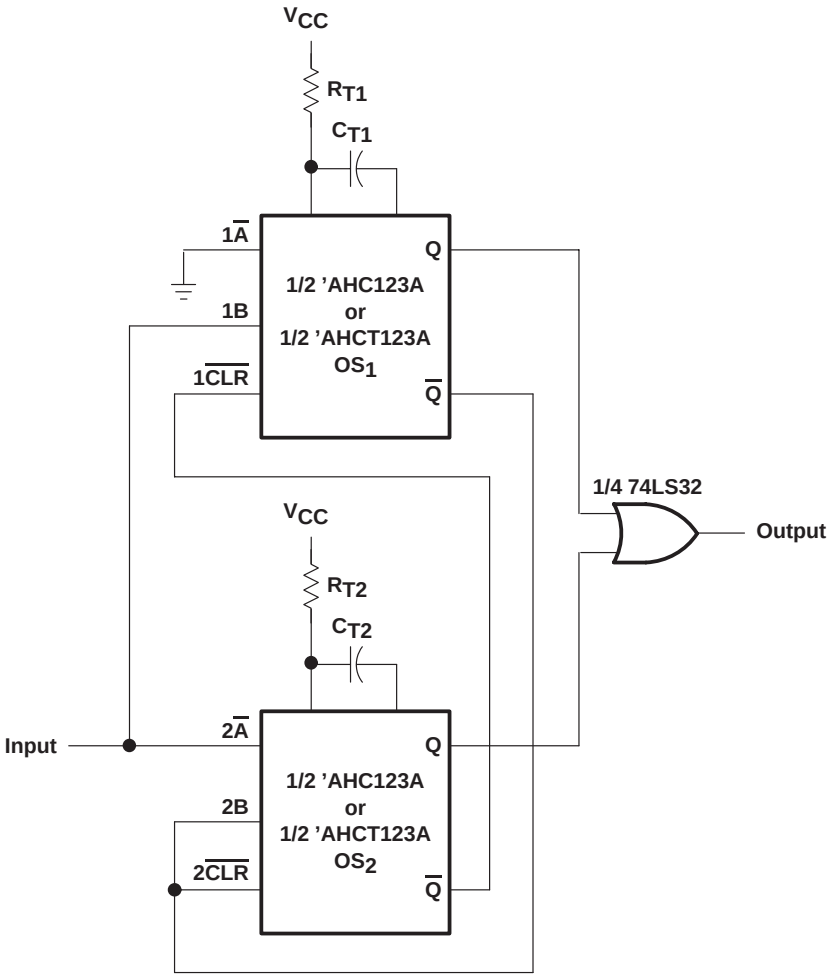

Figure 12. Negative- or Positive-Edge-Triggered One-Shot Multivibrator

Pulse-Duration Detector[1]

Figure 13 shows a circuit using the AHC/AHCT123A chip, which generates an output pulse (t_3) if the trigger pulse duration (t_2) is wider than the programmed output pulse duration ($t_w = K \times R_T \times C_T$). It functions as follows:

The A input of the AHC/AHCT123A is approximately V_{CC} and the transistor Q_1 usually is off. The Q output of the AHC/AHCT123A normally is low and the output of Q_2 is off (the output normally is low because no pullup exists). A trigger of duration t_1 applied at the input is differentiated by the R_1C_1 combination and Q_1 is turned on. The result of that momentary condition at the base of Q_1 is a negative-going pulse at point 1 (the A input of the AHC/AHCT123A), which triggers AHC/AHCT123A. The AHC/AHCT123A remains on for the time $t_w = K \times R_T \times C_T$, which is waveform t_2. Q_2 on the output of the device is turned on for a time equal to t_2 and, after this time, turns off. If the input pulse is still high after this, it appears at the output. The circuit output pulse duration, t_3, equals the input pulse duration, minus the pulse duration of the AHC/AHCT123A.

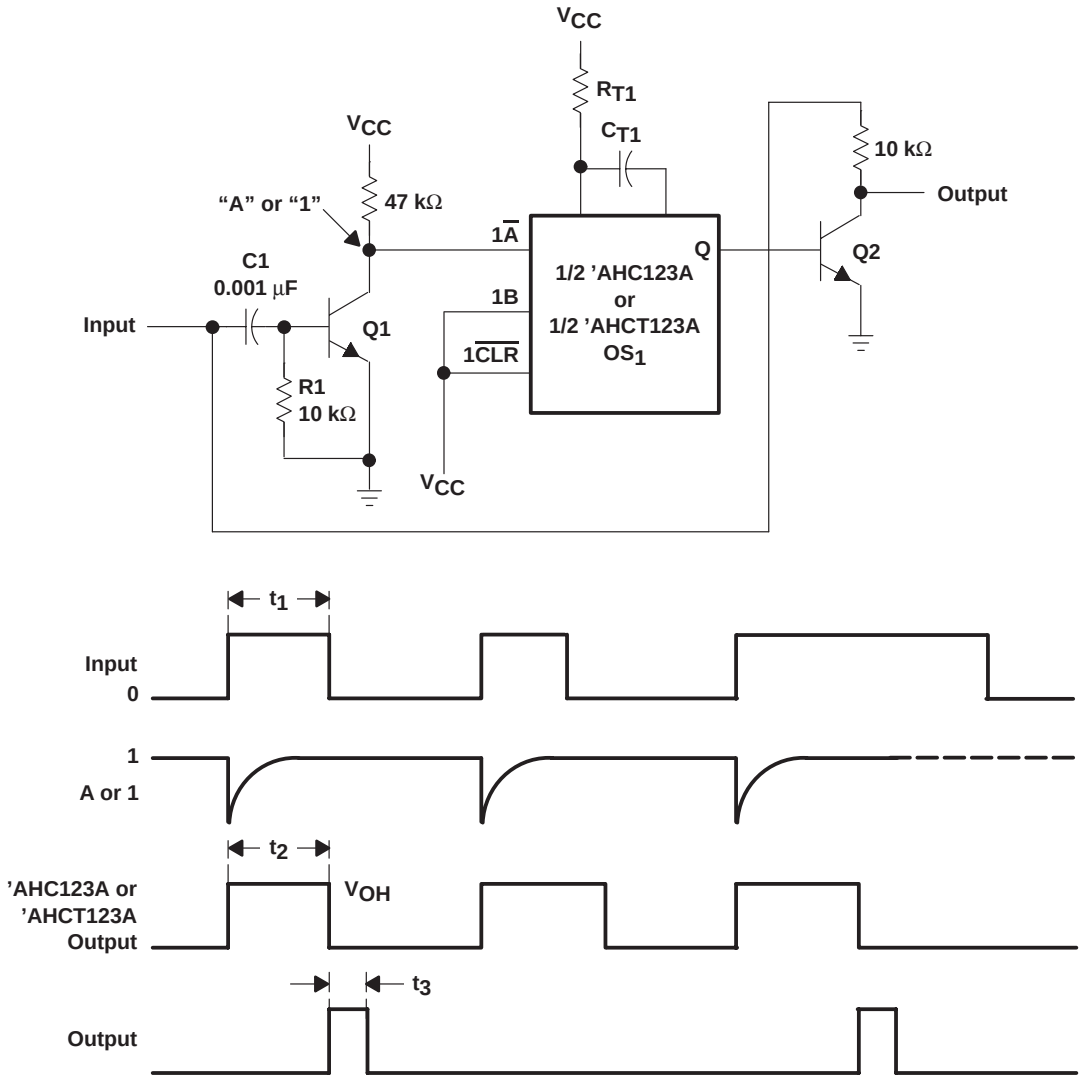

Figure 13. Pulse-Duration Detector

Frequency Discriminator[1]

R_{T1} and C_{T1} in Figure 14 form a resistor-capacitor integration network that produces an output voltage proportional to the frequency. This plot is linear and is valid over a limited range.

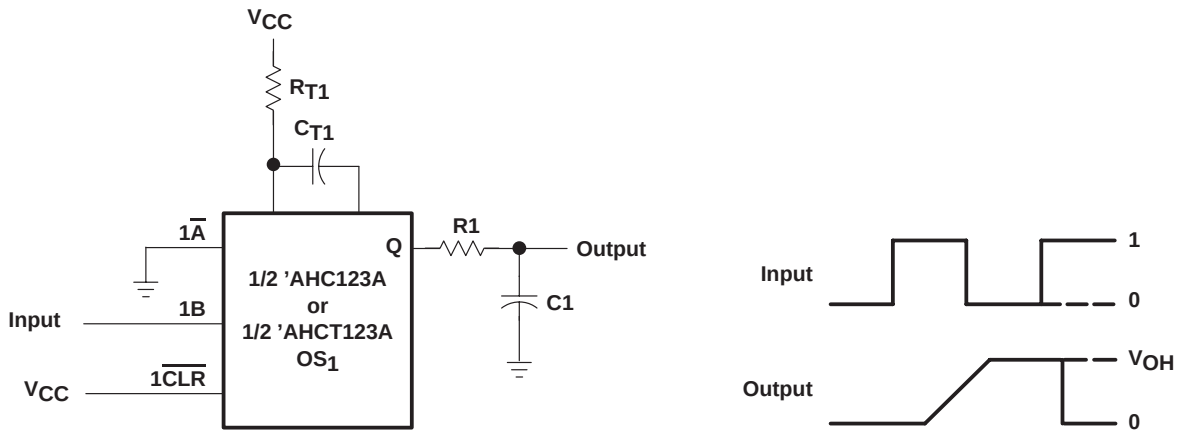

Figure 14. Frequency-Discriminator Circuit

Conclusion

The SN74AHC123A and SN74AHCT123A function similarly. Both devices require external resistors and capacitors for proper operation, and these timing units can be used to determine the output pulse duration. These devices can be retriggered to create very long output pulses. If the input signal is triggered and the time length to the previous input signal is less than $0.30 \times$ initial output pulse duration in seconds, the output duration remains unchanged. A clear input can be used at any time to terminate the output pulse. The output pulse duration also varies according to the temperature of operation and the V_{CC} of the device.

There are several applications in which these dual retriggerable monostable multivibrators can be used. In all cases, it is essential that the setup guidelines be followed to promote the safety and reliability of the devices.

Acknowledgments

The authors of this application report are Sujatha Garimella, Dennis Wade, Clif Dugan, and Gerry Balmer. The authors wish to thank Arnie Ruiz, Joe Costa, Jim Stein, Dave Long, Imran Sohrab, Bryan Lammers, Mark Frimann, Keith Henderson, Terence Ndofor, and Hari Garimella for their assistance with this application report.

References

1. Clif Dugan, *Designing with the SN54/74LS123*, Texas Instruments Incorporated, Dallas, TX, 1990.
2. Walter H. Buchsbaum, Sc.D., *Encyclopedia of Integrated Circuits: A Practical Handbook of Essential Reference Data*, Prentice-Hall Incorporated, Englewood Cliffs, NJ, 1981.

Information from the following web sites also was used in this application report:

http://www.sh-gpl.ti.com/mirrors/
http://www-s.ti.com/sc/psheets/schs142/schs142.pdf
http://www-s.ti.com/sc/psheets/sdls043/sdls043.pdf
http://www-s.ti.com/sc/psheets/scls420a/scls420a.pdf
http://www-s.ti.com/sc/psheets/scls352b/scls352b.pdf

Appendix A

One-Shot Monostable Multivibrator†

Multivibrators are a form of flip-flop circuit in which an RC time constant is used to determine the rate of change of state (toggling). In the monostable or one-shot multivibrator (MV), an external trigger signal starts the change of state of this MV, and the external RC time constant determines the time required from the beginning to the end of this one-shot oscillation.

A basic monostable MV is shown in Figure A–1. The key elements are the two trigger inputs, the reset input, and the values of the external RC time constant. The OR circuit that triggers the MV has a small circle on one of its inputs, indicating that it can accept either a positive- or a negative-edge trigger. The edge-triggering ability is produced because this particular OR circuit is combined with a Schmitt-trigger effect. In some ICs, this type of circuit has a hysteresis characteristic and is referred to as a transmission gate.

The operation of the monostable MV requires that it first be reset so that the Q output is 0 and the $\overline{Q}$ output is 1. When either a positive or a negative trigger signal is entered, Q immediately changes to 1 and $\overline{Q}$ to 0. After a period of time, determined by the RC time constant, the MV returns to its original state, having generated one pulse. When the reset signal occurs, the MV returns to the original state where Q is at 0. In retriggerable monostable MVs, any trigger signal that occurs during the period when Q is at 1 prolongs the duration of the pulse beyond the time determined by the RC time constant.

The function block of a typical emitter-coupled logic (ECL) monostable MV is illustrated in Figure A–1, which shows some of the various features that are available in monostable MV ICs. Trigger signals are applied to the trigger input, and the external +enable or –enable signals determine whether the MV accepts positive- or negative-going edges. Internal Schmitt-trigger circuits make the trigger input insensitive to rise and fall times. Although there is an external RC time constant, there also is an input for external pulse-width control. With an external resistor, a control voltage can be used to vary the pulse width. When a control current is used, the resistor is not required. In addition, this ECL IC has a special high-speed-trigger input that bypasses the internal Schmitt-trigger circuits and permits a very rapid response.

Monostable MVs that can be triggered multiple times within a given time period to increase the pulse duration according to a fixed ratio are available. Other monostable MVs include a preset feature that can be combined with retriggering to generate specific-pulse waveforms.

†Walter H. Buchsbaum, Sc.D., wrote Appendix A and provided Figure A–1 (see *Encyclopedia of Integrated Circuits: A Practical Handbook of Essential Reference Data).*

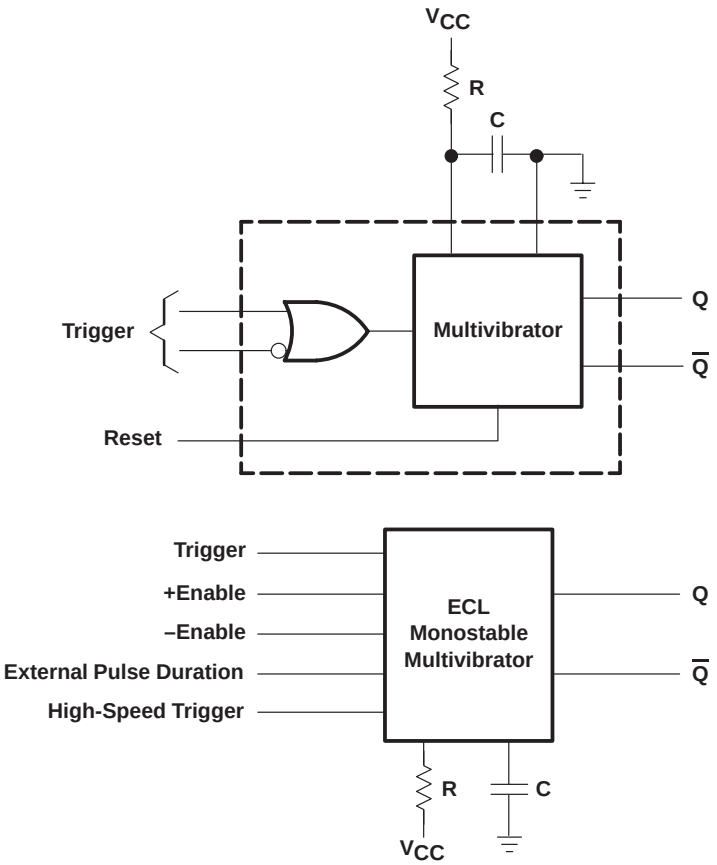

Figure A–1. One-Shot Monostable Multivibrator and Function Block Diagram