# LC2 Schematic

**Pentium-M**

**RS400MD+SB400**

**DATE: Apr. 7th Revision: 2.0**

Datasheet.Directory

THIS SHEET OF ENGINEERING DRAWING IS THE PROPRIETARY PROPERTY OF COMPAL ELECTRONICS, INC. AND CONTAINS CONFIDENTIAL AND TRADE SECRET INFORMATION. THIS SHEET MAY NOT BE TRANSFERED FROM THE CUSTODY OF THE COMPETENT DIVISION OF R&D DEPARTMENT EXCEPT AS AUTHORIZED BY COMPAL ELECTRONICS, INC. NEITHER THIS SHEET NOR THE INFORMATION IT CONTAINS MAY BE USED BY OR DISCLOSED TO ANY THIRD PARTY WITHOUT PRIOR WRITTEN CONSENT OF COMPAL ELECTRONICS, INC.

| | | |
|---|---|---|
| | *Compal Electronics, Inc.* | |
| Title | SCHEMATIC, M/B LA-2641P | |
| Size | Document Number 401335 | Rev B |
| Date: 星期三, 四月 13, 2005 | Sheet 1 of 48 | |

| Page | Function |
|---|---|
| 1 | Cover Page |
| 2 | Index |
| 3 | Block Diagram |
| 4 | Notes List |
| 5 | Power Block |
| 6 | Pentium-M(1/3) |
| 7 | Pentium-M(2/3) |
| 8 | CPU Decoupling/FAN(3/3) |
| 9 | RS400MD-FSB/A-PCIE(1/4) |
| 10 | RS400MD-DDRII/MISC(2/4) |
| 11 | RS400MD-DISPLAY(3/4) |
| 12 | RS400MD-PWR/GND(4/4) |
| 13 | DDRII-SODIMM0 |
| 14 | DDRII-SODIMM1 |
| 15 | TV_OUT/LVDS/CRT |
| 16 | ClockGen ICS951413 |
| 17 | SB400-PCIE/PCI/LPC/RTC(1/4) |
| 18 | SB400-USB/AC97/MISC.(2/4) |
| 19 | SB400-IDE/SATA(3/4) |
| 20 | SB400-Power/GND(4/4) |
| 21 | Hardware Trap |
| 22 | IDE/CD-ROM Conn. |
| 23 | USB/BlueTooth/FP |
| 24 | MINI_PCI SLOT-WLAN |
| 25 | BCM5751M-GLAN |
| 26 | RJ-45 Connector |
| 27 | R5C842-PCI/CARD BUS/OHCI |
| 28 | CARD BUS/1394 |
| 29 | AC97 Codec AD1981B/MDC |
| 30 | AMP./Audio Jack |
| 31 | ENE-KB910L/TPM |
| 32 | BIOS/EE-Prom/TP/KB/SW |
| 33 | DC TO DC |
| 34 | PWR DCIN/ Precharge |
| 35 | PWR CPU OTP |
| 36 | PWR-CHARGER |
| 37 | PWR-Battery Select |
| 38 | PWR-3.3V/5V |
| 39 | +1.2VSP & +1.8VALWP |
| 40 | PWR 0.9VSP/VCCP |
| 41 | PWR CPU_CORE |
| 42 | Optional VGA MVCORE Power |


THIS SHEET OF ENGINEERING DRAWING IS THE PROPRIETARY PROPERTY OF COMPAL ELECTRONICS, INC. AND CONTAINS CONFIDENTIAL AND TRADE SECRET INFORMATION. THIS SHEET MAY NOT BE TRANSFERED FROM THE CUSTODY OF THE COMPETENT DIVISION OF R&D DEPARTMENT EXCEPT AS AUTHORIZED BY COMPAL ELECTRONICS, INC. NEITHER THIS SHEET NOR THE INFORMATION IT CONTAINS MAY BE USED BY OR DISCLOSED TO ANY THIRD PARTY WITHOUT PRIOR WRITTEN CONSENT OF COMPAL ELECTRONICS, INC.

**Compal Electronics, Inc.**

| | | |
|---|---|---|
| Title | SCHEMATIC, M/B LA-2641P | |
| Size | Document Number 401335 | Rev B |
| Date: 星期三, 四月 13, 2005 | Sheet 2 of 48 | |

# BLOCK DIAGRAM

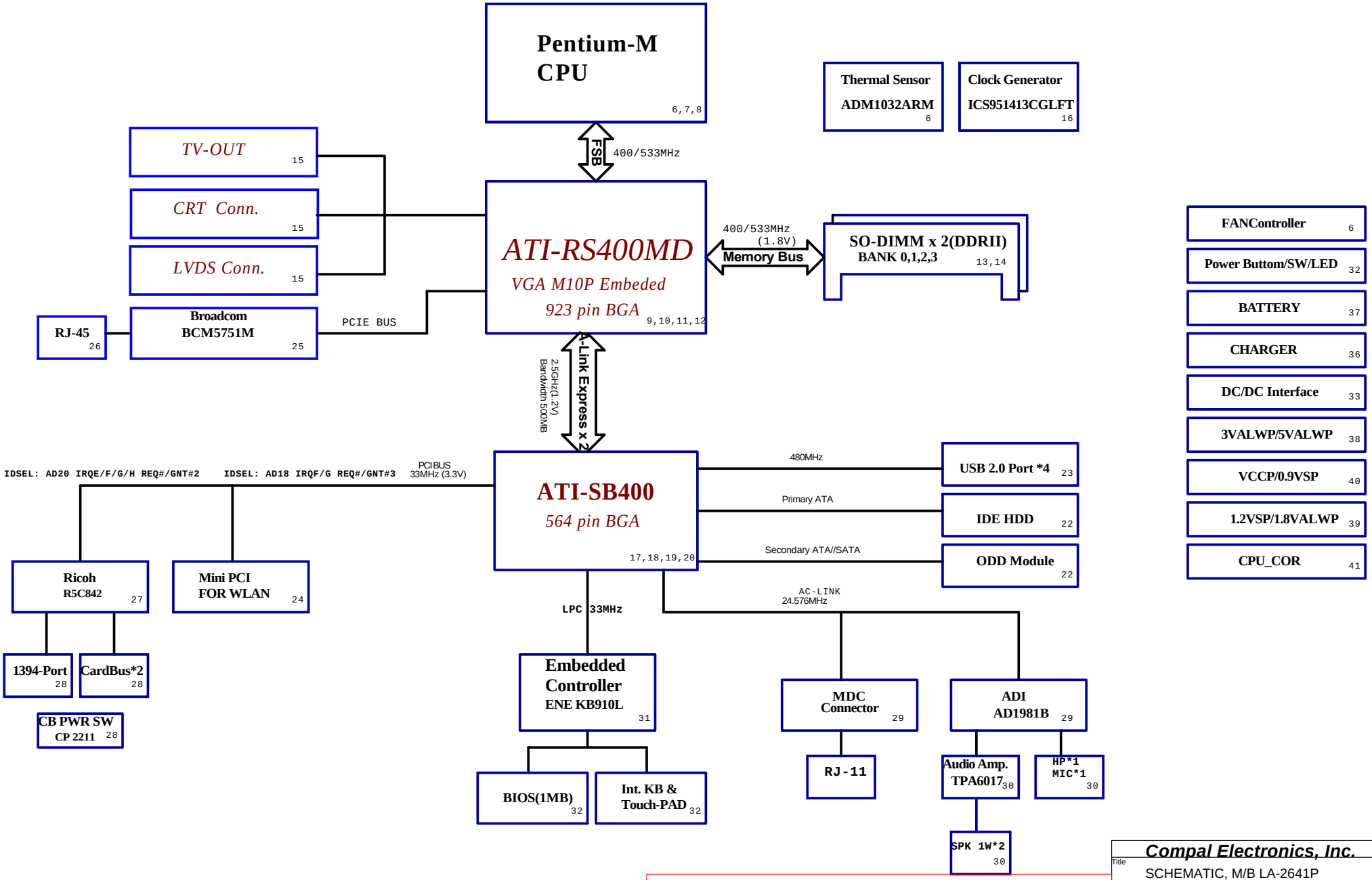


THIS SHEET OF ENGINEERING DRAWING IS THE PROPRIETARY PROPERTY OF COMPAL ELECTRONICS, INC. AND CONTAINS CONFIDENTIAL AND TRADE SECRET INFORMATION. THIS SHEET MAY NOT BE TRANSFERED FROM THE CUSTODY OF THE COMPETENT DIVISION OF R&D DEPARTMENT EXCEPT AS AUTHORIZED BY COMPAL ELECTRONICS, INC. NEITHER THIS SHEET NOR THE INFORMATION IT CONTAINS MAY BE USED BY OR DISCLOSED TO ANY THIRD PARTY WITHOUT PRIOR WRITTEN CONSENT OF COMPAL ELECTRONICS, INC.

| | | |
|---|---|---|
| Compal Electronics, Inc. | | |
| Title: SCHEMATIC, M/B LA-2641P | | |
| Size | Document Number: 401335 | Rev: B |
| Date: 星期三, 四月 13, 2005 | Sheet 3 of 48 | |

## Voltage Rails

| Power Plane | Description | S1 | S3 | S5 |
|---|---|---|---|---|
| VIN | Adapter power supply (19V) | ON | ON | ON |
| B+ | AC or battery power rail for power circuit. | ON | ON | ON |
| +CPU_CORE | Core voltage for CPU | ON | OFF | OFF |
| +VCCP | 1.2V switched power rail for CPU AGTL Bus | ON | OFF | OFF |
| +1.2VS | 1.2VS for PCI-Express | ON | OFF | OFF |
| +1.8VS | 1.8VS switched power rail | ON | OFF | OFF |
| +1.8V | 1.8V power rail | ON | ON | OFF |
| +0.9VS | 0.9V power rail | ON | OFF | OFF |
| +3.3V | 3.3V switched power rail | ON | ON | OFF |
| +3VALW | 3.3V always on power rail | ON | ON | ON* |
| +3VS | 3.3V switched power rail | ON | OFF | OFF |
| +5VALW | 5V always on power rail | ON | ON | ON* |
| +5VS | 5V switched power rail | ON | OFF | OFF |
| +RTCVCC | RTC power | ON | ON | ON |

Note : ON* means that this power plane is ON only with AC power available, otherwise it is OFF.

## External PCI Devices

| Device | IDSEL# | REQ#/GNT# | Interrupts |
|---|---|---|---|
| CardBus(R5C842) | AD20 | 2 | PIRQE/PIRQF/PIRQG/PIRQH |
| Mini-PCI(WLAN) | AD18 | 3 | PIRQF/PIRQG |

## EC SM Bus1 address

| Device | Address |
|---|---|
| Main Battery | 0001 011X b |
| EEPROM(24C16/02) | 1010 000X b |
| Second Battery | |

## EC SM Bus2 address

| Device | Address |
|---|---|
| ADM1032 | 1001 110X b |

## SB400 SM Bus address

| Device | Address |
|---|---|
| Clock Generator (ICS951413CYGLFT) | 1101 001Xb |
| DDR DIMM0 | 1010 000Xb |
| DDR DIMM2 | 1010 001Xb |

## Dip SW function

| | |
|---|---|
| KBSEL0/1# | 11:JP K/B 01:US K/B 10:UK K/B 00: Reserve |
| PASSWORD# | 0:Override 1:Avaliable |
| FINGERPRINT# | 0:Existence 1:Non-Existence |

## Function Table

| Function | Japan | | | HK/CHINA | Comment |
|---|---|---|---|---|---|
| | Commercial | Consumer | | | |
| | | LaVie | NEC Direct(Internet Retailing) | | |
| TV-OUT | Yes | <— | <— | <— | |
| Bluetooth | No | Yes | <— | <— | Need BTO |
| PWR LED (Odekake) | No | <— | <— | <— | Not need Odekake |
| S/W | I/II Key | <— | <— | <— | all same |
| 4 in 1 Card Adapter | No | Yes | <— | <— | |
| Finger Print | Yes (BTO) | No | Yes (BTO) | No | Need BTO |
| TPM | Yes | No | <— | <— | Need BTO |
| W-LAN | JP | JP | JP | Oversea | |

## Chip Reversion

| Chip \ Phase | ES Phase | PP Phase | MP1 Phae | DR2 |
|---|---|---|---|---|
| RS400MD | A12 | A21-LF | A21-LF | |
| SB400 | A31 | A31-LF | A32-LF | |
| Clk Gen | B | C | C | |
| KB910L | A0 | A1 | A1 | |
| AD1981B | A | A | A | |
| | | | | |
| | | | | |
| | | | | |
| | | | | |

THIS SHEET OF ENGINEERING DRAWING IS THE PROPRIETARY PROPERTY OF COMPAL ELECTRONICS, INC. AND CONTAINS CONFIDENTIAL AND TRADE SECRET INFORMATION. THIS SHEET MAY NOT BE TRANSFERED FROM THE CUSTODY OF THE COMPETENT DIVISION OF R&D DEPARTMENT EXCEPT AS AUTHORIZED BY COMPAL ELECTRONICS, INC. NEITHER THIS SHEET NOR THE INFORMATION IT CONTAINS MAY BE USED BY OR DISCLOSED TO ANY THIRD PARTY WITHOUT PRIOR WRITTEN CONSENT OF COMPAL ELECTRONICS, INC.

# LC2 Power block

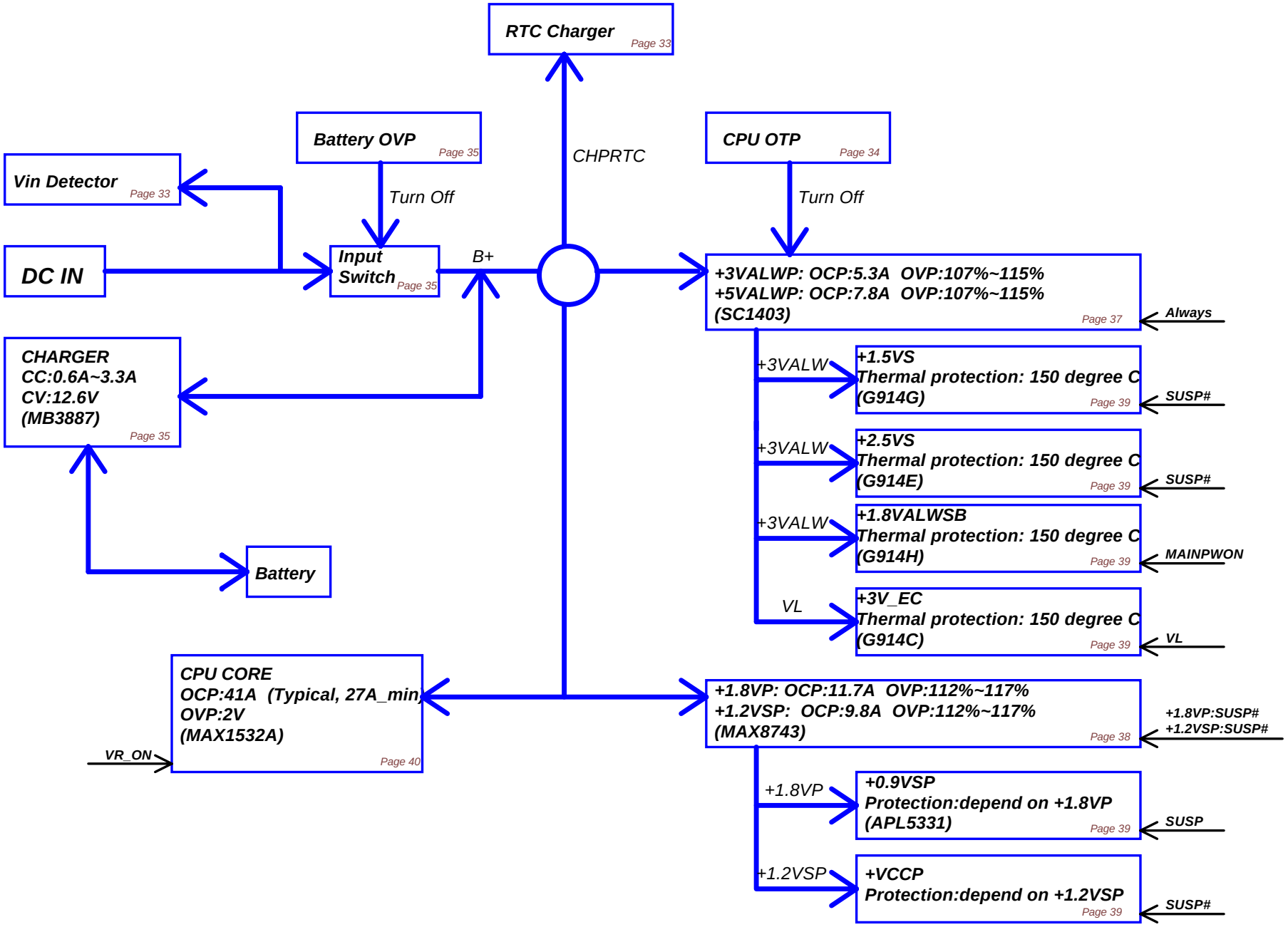


PROPRIETARY NOTE: THIS SHEET OF ENGINEERING DRAWING AND SPECIFICATIONS CONTAINS CONFIDENTIAL TRADE SECRET AND OTHER PROPRIETARY INFORMATION OF DELL INC. ("DELL") THIS DOCUMENT MAY NOT BE TRANSFERRED OR COPIED WITHOUT THE EXPRESS WRITTEN AUTHORIZATION OF DELL. IN ADDITION, NEITHER THIS SHEET NOR THE INFORMATION IT CONTAINS WAY BE USED BY OR DISCLOSED TO ANY THIRD PARTY WITHOUT DELL'S EXPRESS WRITTEN CONSENT.

Compal Electronics, Inc.
Title: SCHEMATIC, M/B LA-2641P
Size: Document Number: 401335 Rev B
Date: 星期三, 四月 13, 2005 Sheet 5 of 48

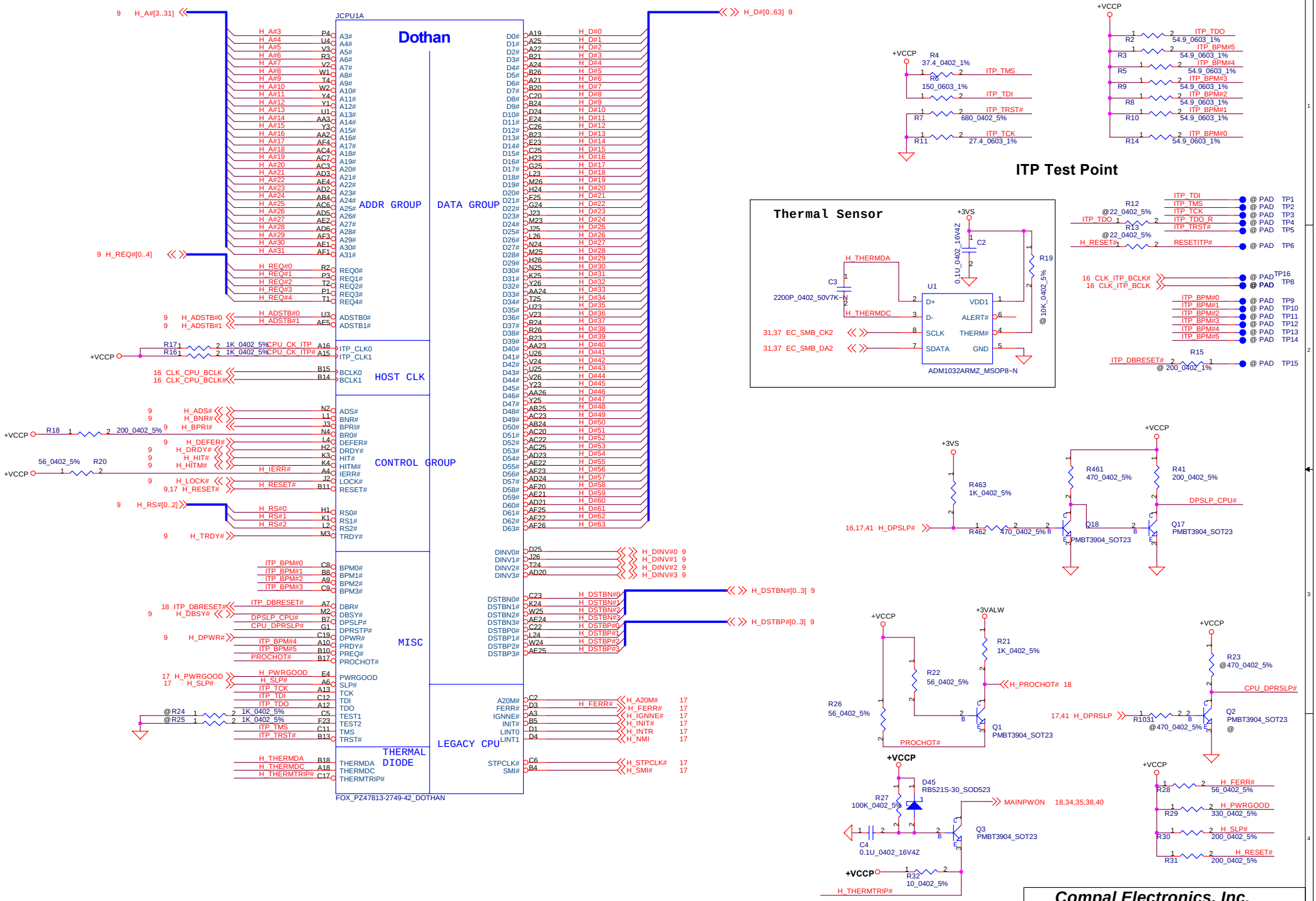


THIS SHEET OF ENGINEERING DRAWING IS THE PROPRIETARY PROPERTY OF COMPAL ELECTRONICS, INC. AND CONTAINS CONFIDENTIAL AND TRADE SECRET INFORMATION. THIS SHEET MAY NOT BE TRANSFERED FROM THE CUSTODY OF THE COMPETENT DIVISION OF R&D DEPARTMENT EXCEPT AS AUTHORIZED BY COMPAL ELECTRONICS, INC. NEITHER THIS SHEET NOR THE INFORMATION IT CONTAINS MAY BE USED BY OR DISCLOSED TO ANY THIRD PARTY WITHOUT PRIOR WRITTEN CONSENT OF COMPAL ELECTRONICS, INC.

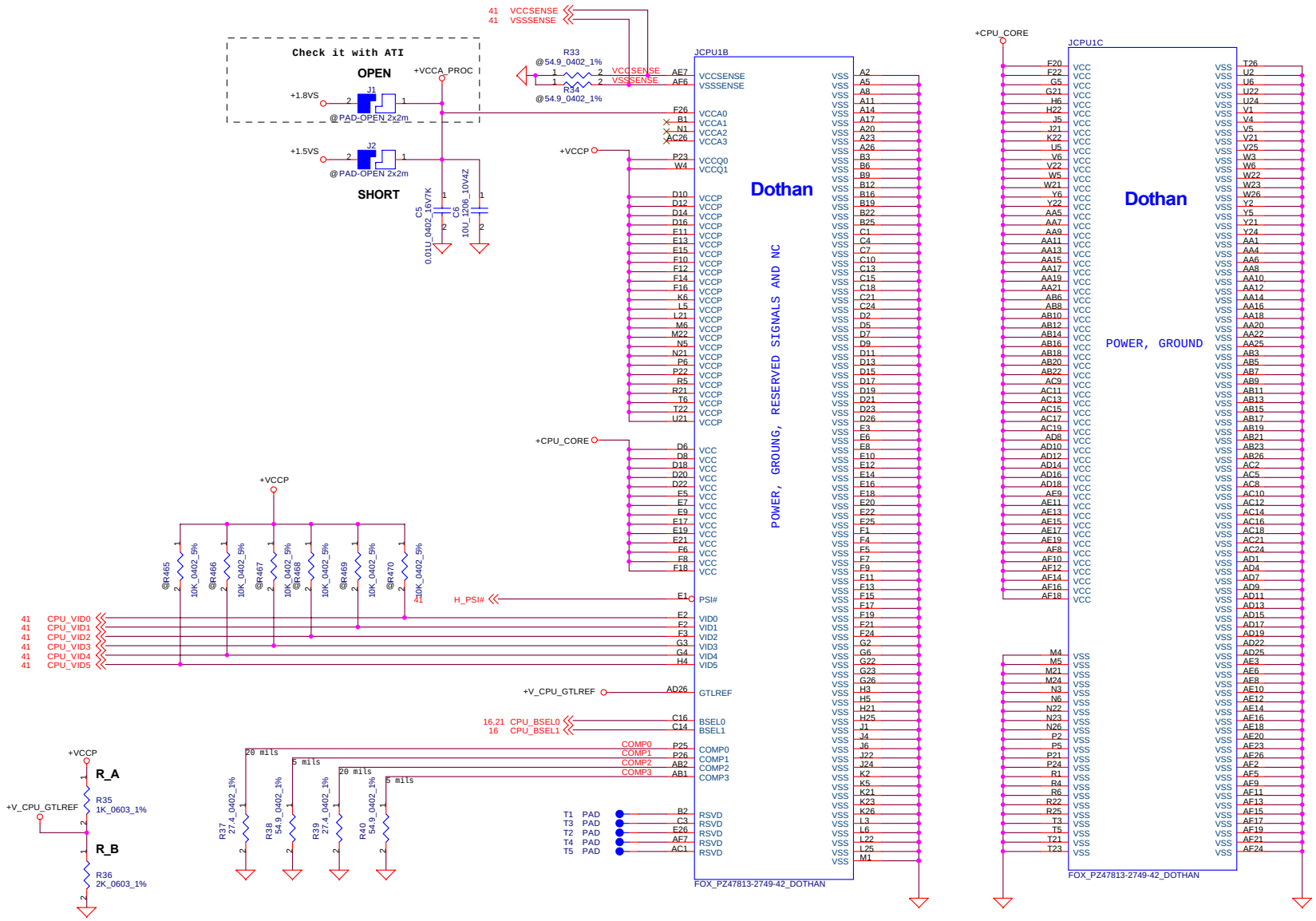


THIS SHEET OF ENGINEERING DRAWING IS THE PROPRIETARY PROPERTY OF COMPAL ELECTRONICS, INC. AND CONTAINS CONFIDENTIAL AND TRADE SECRET INFORMATION. THIS SHEET MAY NOT BE TRANSFERED FROM THE CUSTODY OF THE COMPETENT DIVISION OF R&D DEPARTMENT EXCEPT AS AUTHORIZED BY COMPAL ELECTRONICS, INC. NEITHER THIS SHEET NOR THE INFORMATION IT CONTAINS MAY BE USED BY OR DISCLOSED TO ANY THIRD PARTY WITHOUT PRIOR WRITTEN CONSENT OF COMPAL ELECTRONICS, INC.

| | |
|---|---|
| Compal Electronics, Inc. | |
| Title | SCHEMATIC, M/B LA-2641P |
| Size | Document Number: 401335 — Rev B |
| Date: 星期三, 四月 13, 2005 | Sheet 7 of 48 |

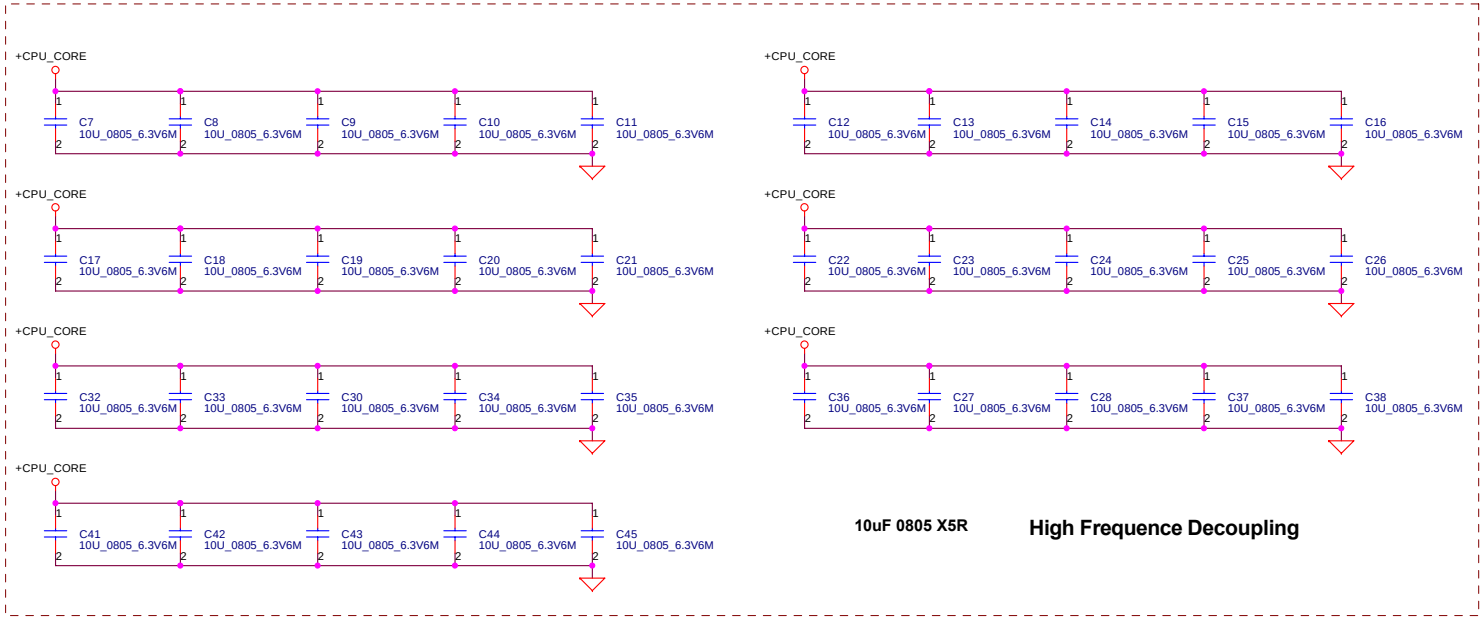


**ESR <= 3m ohm**
**Capacitor > 880 uF**

**Near VCORE regulator.**

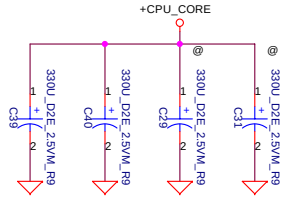


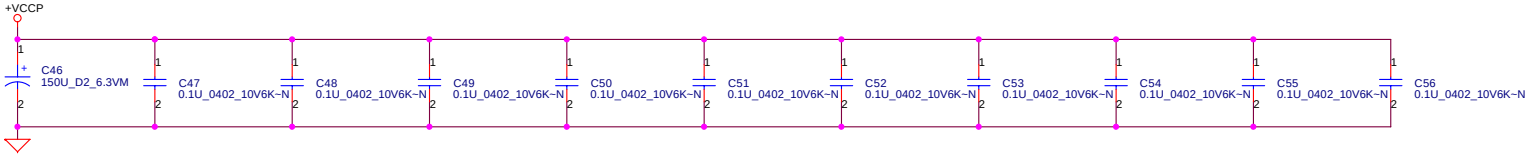


# FAN CONN. 1

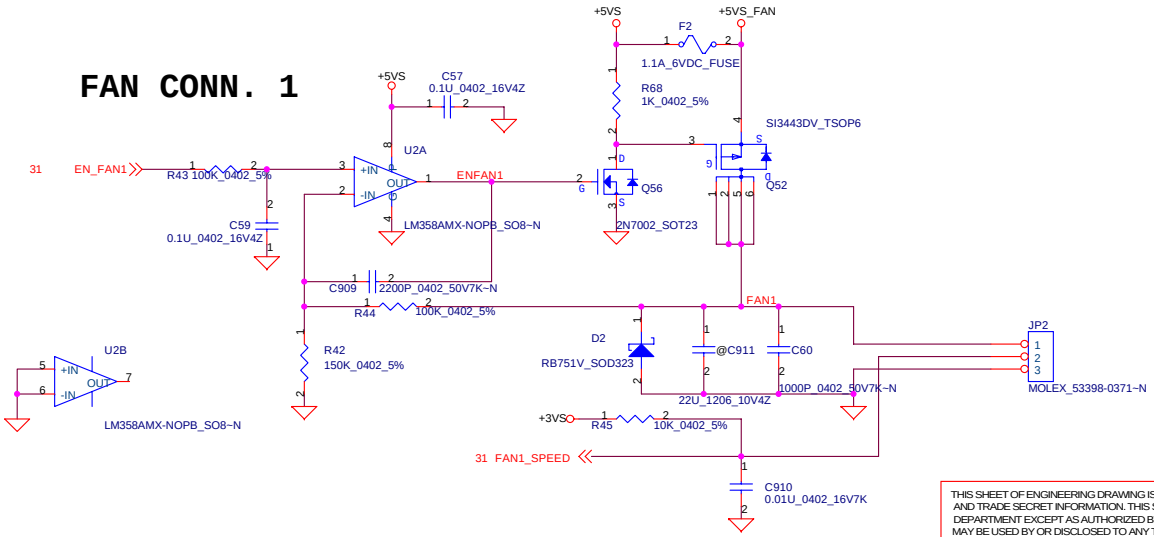


THIS SHEET OF ENGINEERING DRAWING IS THE PROPRIETARY PROPERTY OF COMPAL ELECTRONICS, INC. AND CONTAINS CONFIDENTIAL AND TRADE SECRET INFORMATION. THIS SHEET MAY NOT BE TRANSFERED FROM THE CUSTODY OF THE COMPETENT DIVISION OF R&D DEPARTMENT EXCEPT AS AUTHORIZED BY COMPAL ELECTRONICS, INC. NEITHER THIS SHEET NOR THE INFORMATION IT CONTAINS MAY BE USED BY OR DISCLOSED TO ANY THIRD PARTY WITHOUT PRIOR WRITTEN CONSENT OF COMPAL ELECTRONICS, INC.

| | | |
|---|---|---|
| Compal Electronics, Inc. | | |
| Title: SCHEMATIC, M/B LA-2641P | | |
| Size | Document Number: 401335 | Rev: B |
| Date: 星期二, 四月 13, 2005 | Sheet 8 of 48 | |

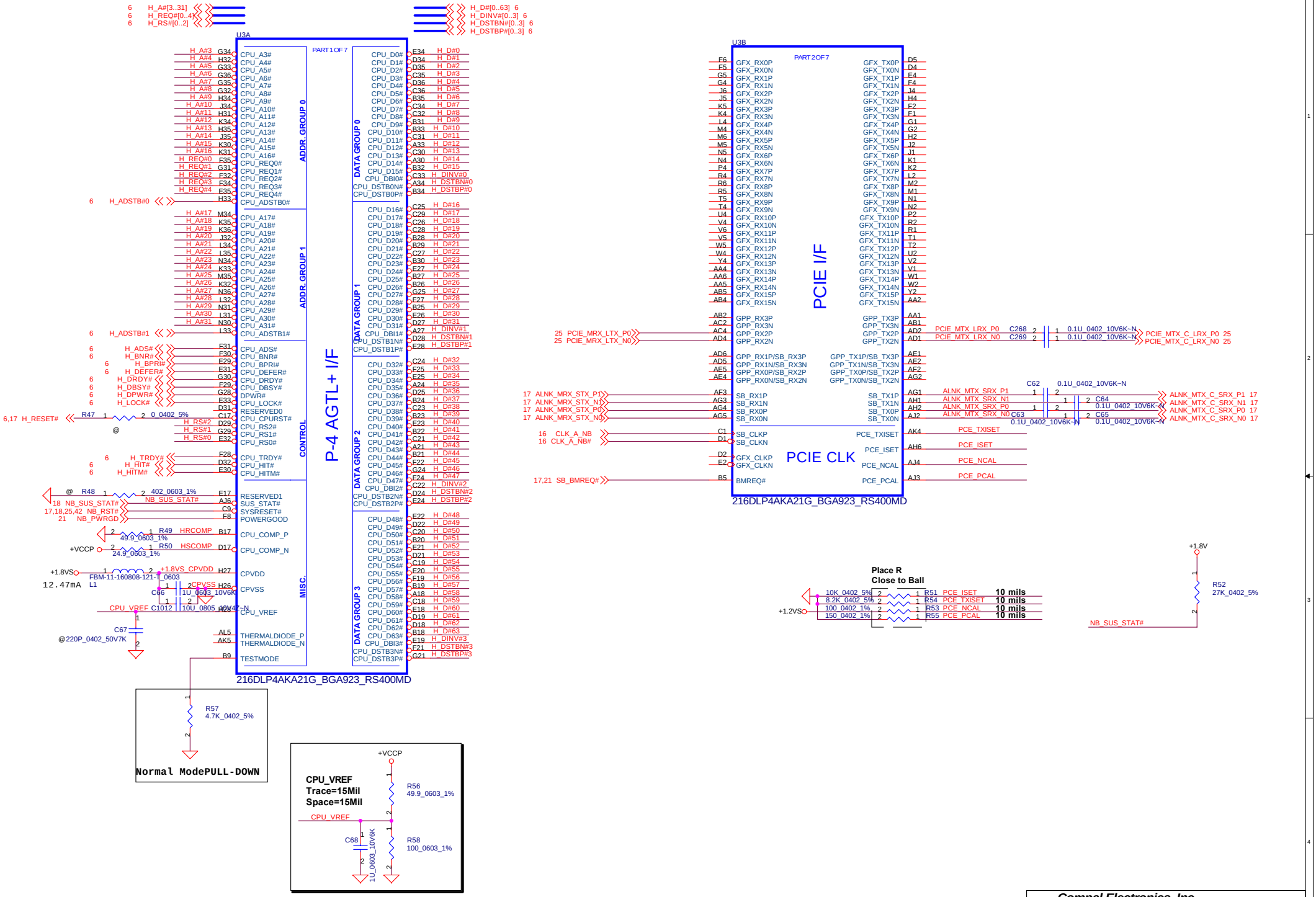


THIS SHEET OF ENGINEERING DRAWING IS THE PROPRIETARY PROPERTY OF COMPAL ELECTRONICS, INC. AND CONTAINS CONFIDENTIAL AND TRADE SECRET INFORMATION. THIS SHEET MAY NOT BE TRANSFERED FROM THE CUSTODY OF THE COMPETENT DIVISION OF R&D DEPARTMENT EXCEPT AS AUTHORIZED BY COMPAL ELECTRONICS, INC. NEITHER THIS SHEET NOR THE INFORMATION IT CONTAINS MAY BE USED BY OR DISCLOSED TO ANY THIRD PARTY WITHOUT PRIOR WRITTEN CONSENT OF COMPAL ELECTRONICS, INC.

**Compal Electronics, Inc.**

Title: **SCHEMATIC, M/B LA-2641P**

Size | Document Number: **401335** | Rev: B

Date: 星期三, 四月 13, 2005 | Sheet 9 of 48

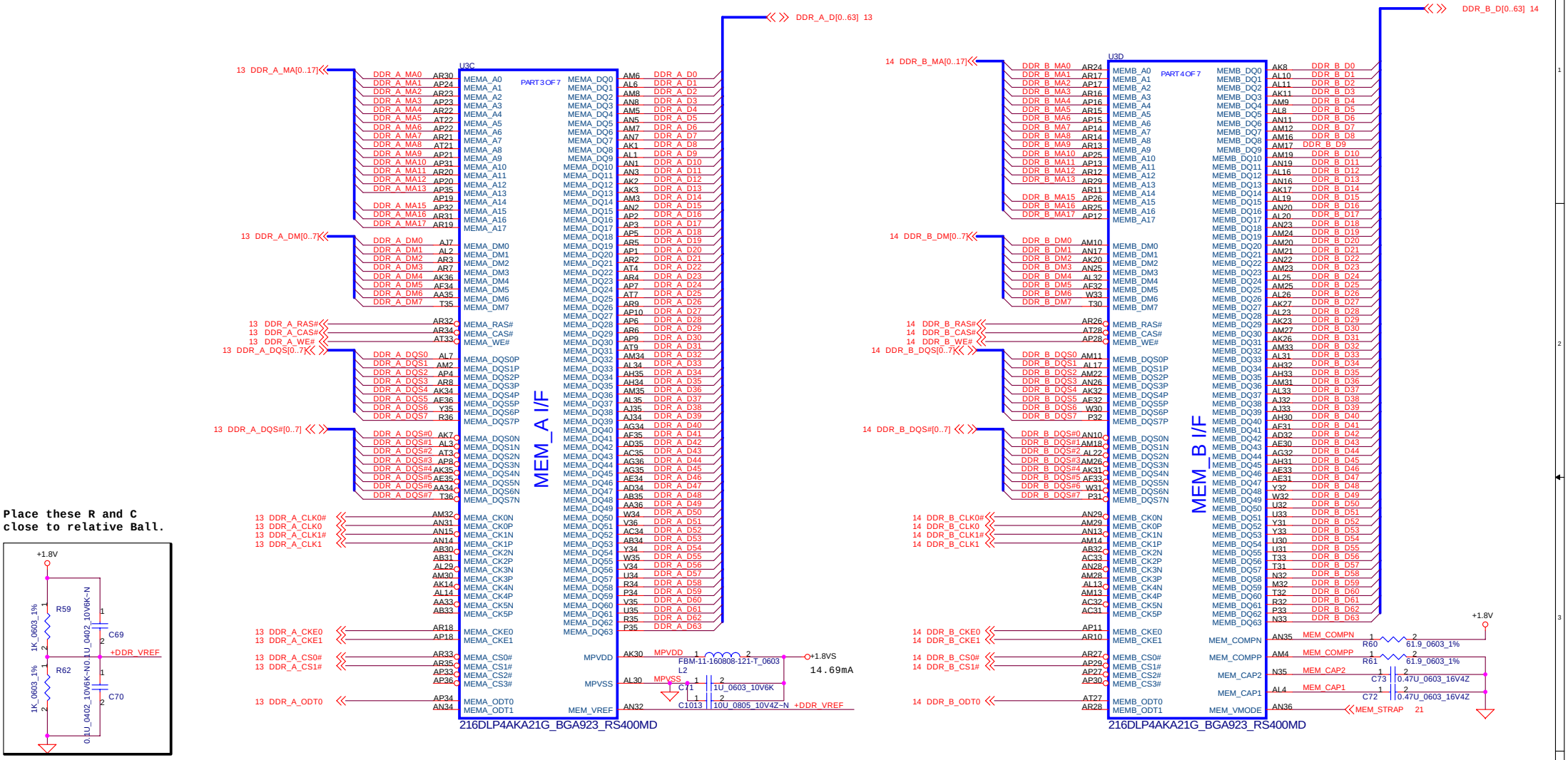


THIS SHEET OF ENGINEERING DRAWING IS THE PROPRIETARY PROPERTY OF COMPAL ELECTRONICS, INC. AND CONTAINS CONFIDENTIAL AND TRADE SECRET INFORMATION. THIS SHEET MAY NOT BE TRANSFERED FROM THE CUSTODY OF THE COMPETENT DIVISION OF R&D DEPARTMENT EXCEPT AS AUTHORIZED BY COMPAL ELECTRONICS, INC. NEITHER THIS SHEET NOR THE INFORMATION IT CONTAINS MAY BE USED BY OR DISCLOSED TO ANY THIRD PARTY WITHOUT PRIOR WRITTEN CONSENT OF COMPAL ELECTRONICS, INC.

**Compal Electronics, Inc.**

Title: **SCHEMATIC, M/B LA-2641P**

Size | Document Number: **401335** | Rev: B

Date: 星期三, 四月 13, 2005 | Sheet 10 of 48

| | |
|---|---|
| AVDD | DAC VDD (2.5V/3.3V) |
| AVDDDI | DIGITAL VDD (1.8V) |
| AVDDQ | DAC2 BANDGAP REF (1.8V) |
| PLLVDD | PLL VDD (1.8V) |

PUT AVDD, AVDDDI, AVDDQ, PLVDD DECOUPLING CAPS ON THE BOTTOM, CLOSE TO BALLS

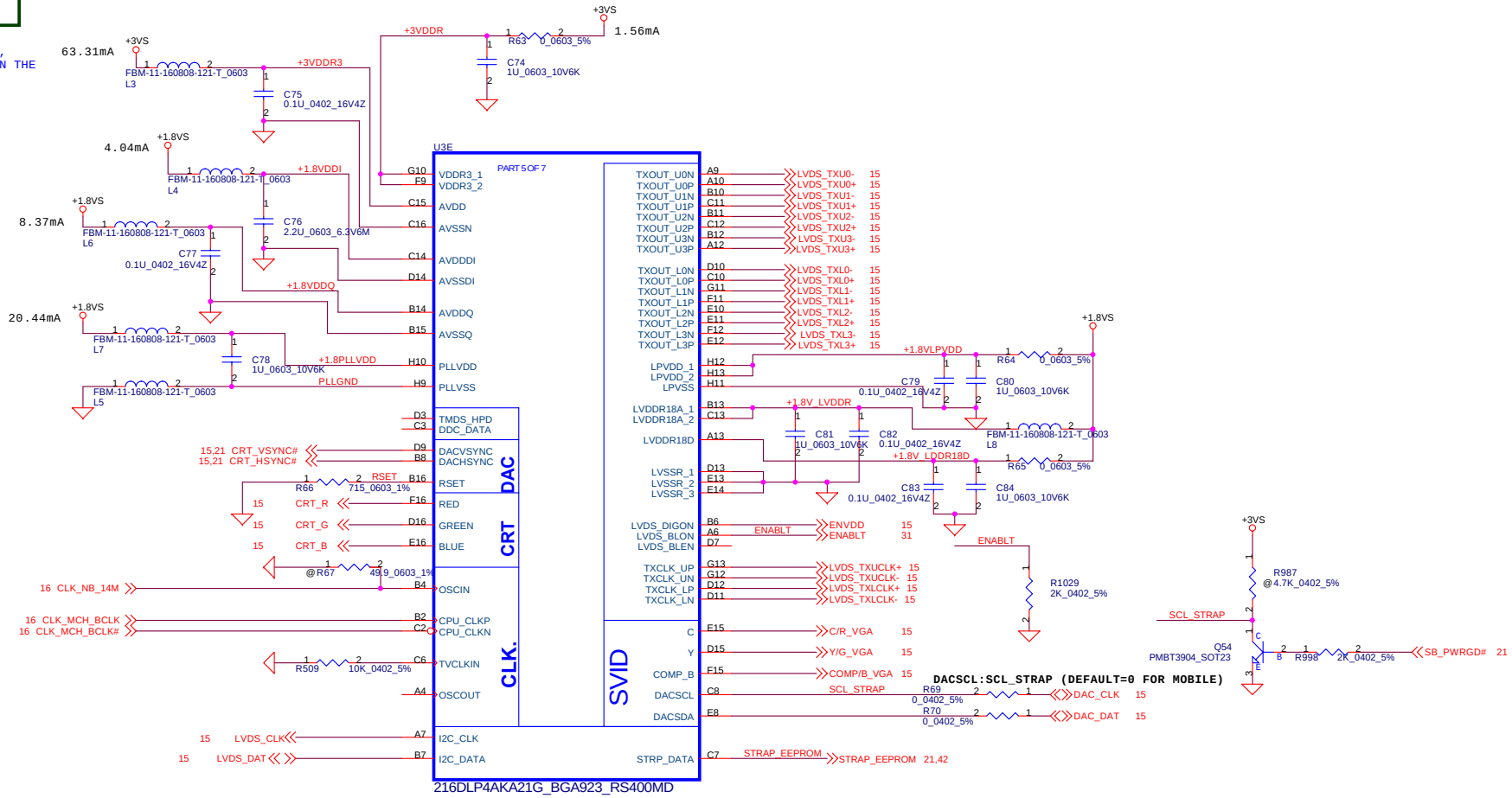


THIS SHEET OF ENGINEERING DRAWING IS THE PROPRIETARY PROPERTY OF COMPAL ELECTRONICS, INC. AND CONTAINS CONFIDENTIAL AND TRADE SECRET INFORMATION. THIS SHEET MAY NOT BE TRANSFERED FROM THE CUSTODY OF THE COMPETENT DIVISION OF R&D DEPARTMENT EXCEPT AS AUTHORIZED BY COMPAL ELECTRONICS, INC. NEITHER THIS SHEET NOR THE INFORMATION IT CONTAINS MAY BE USED BY OR DISCLOSED TO ANY THIRD PARTY WITHOUT PRIOR WRITTEN CONSENT OF COMPAL ELECTRONICS, INC.

**Compal Electronics, Inc.**

Title: SCHEMATIC, M/B LA-2641P

Size | Document Number: 401335 | Rev: B

Date: 星期二, 四月 13, 2005 | Sheet 11 of 48

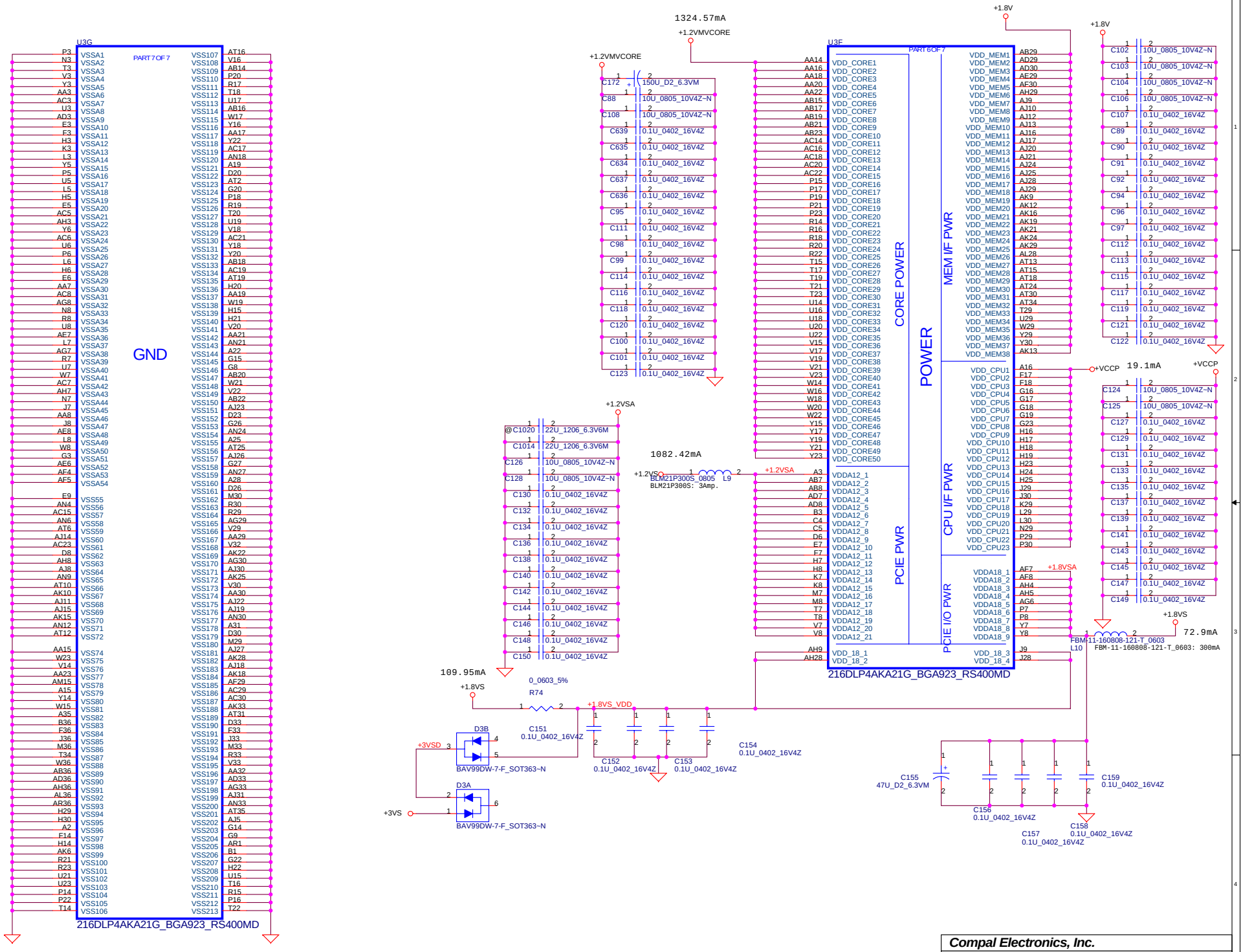


THIS SHEET OF ENGINEERING DRAWING IS THE PROPRIETARY PROPERTY OF COMPAL ELECTRONICS, INC. AND CONTAINS CONFIDENTIAL AND TRADE SECRET INFORMATION. THIS SHEET MAY NOT BE TRANSFERED FROM THE CUSTODY OF THE COMPETENT DIVISION OF R&D DEPARTMENT EXCEPT AS AUTHORIZED BY COMPAL ELECTRONICS, INC. NEITHER THIS SHEET NOR THE INFORMATION IT CONTAINS MAY BE USED BY OR DISCLOSED TO ANY THIRD PARTY WITHOUT PRIOR WRITTEN CONSENT OF COMPAL ELECTRONICS, INC.

**Compal Electronics, Inc.**

Title: **SCHEMATIC, M/B LA-2641P**

Size | Document Number: **401335** | Rev: B

Date: 星期二, 四月 13, 2005 | Sheet 12 of 48

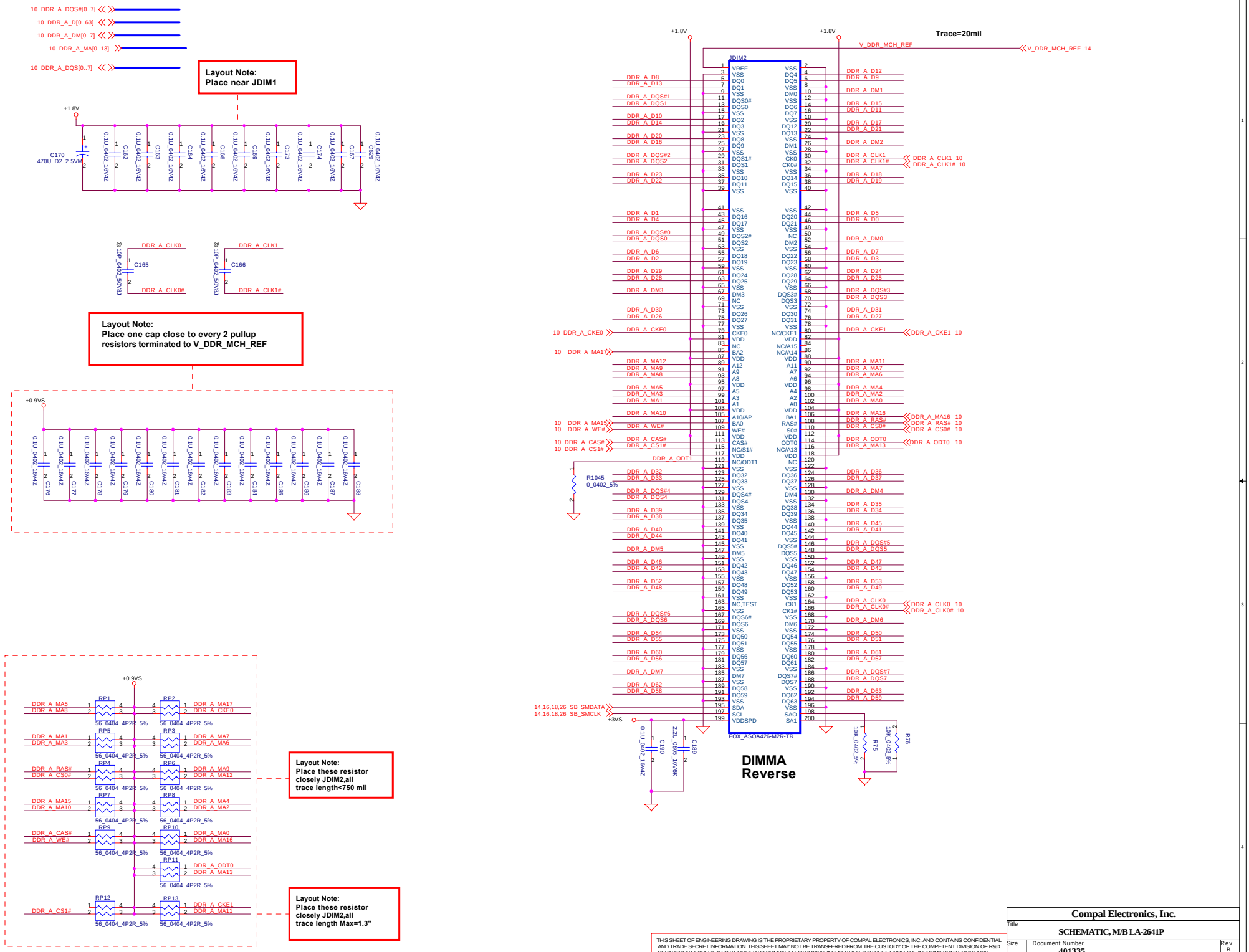


THIS SHEET OF ENGINEERING DRAWING IS THE PROPRIETARY PROPERTY OF COMPAL ELECTRONICS, INC. AND CONTAINS CONFIDENTIAL AND TRADE SECRET INFORMATION. THIS SHEET MAY NOT BE TRANSFERED FROM THE CUSTODY OF THE COMPETENT DIVISION OF R&D DEPARTMENT EXCEPT AS AUTHORIZED BY COMPAL ELECTRONICS, INC. NEITHER THIS SHEET NOR THE INFORMATION IT CONTAINS MAY BE USED BY OR DISCLOSED TO ANY THIRD PARTY WITHOUT PRIOR WRITTEN CONSENT OF COMPAL ELECTRONICS, INC.

| | |
|---|---|
| Compal Electronics, Inc. | |
| Title | SCHEMATIC, M/B LA-2641P |
| Size | Document Number 401335 |
| Rev | B |
| Date: 星期三, 四月 13, 2005 | Sheet 13 of 48 |

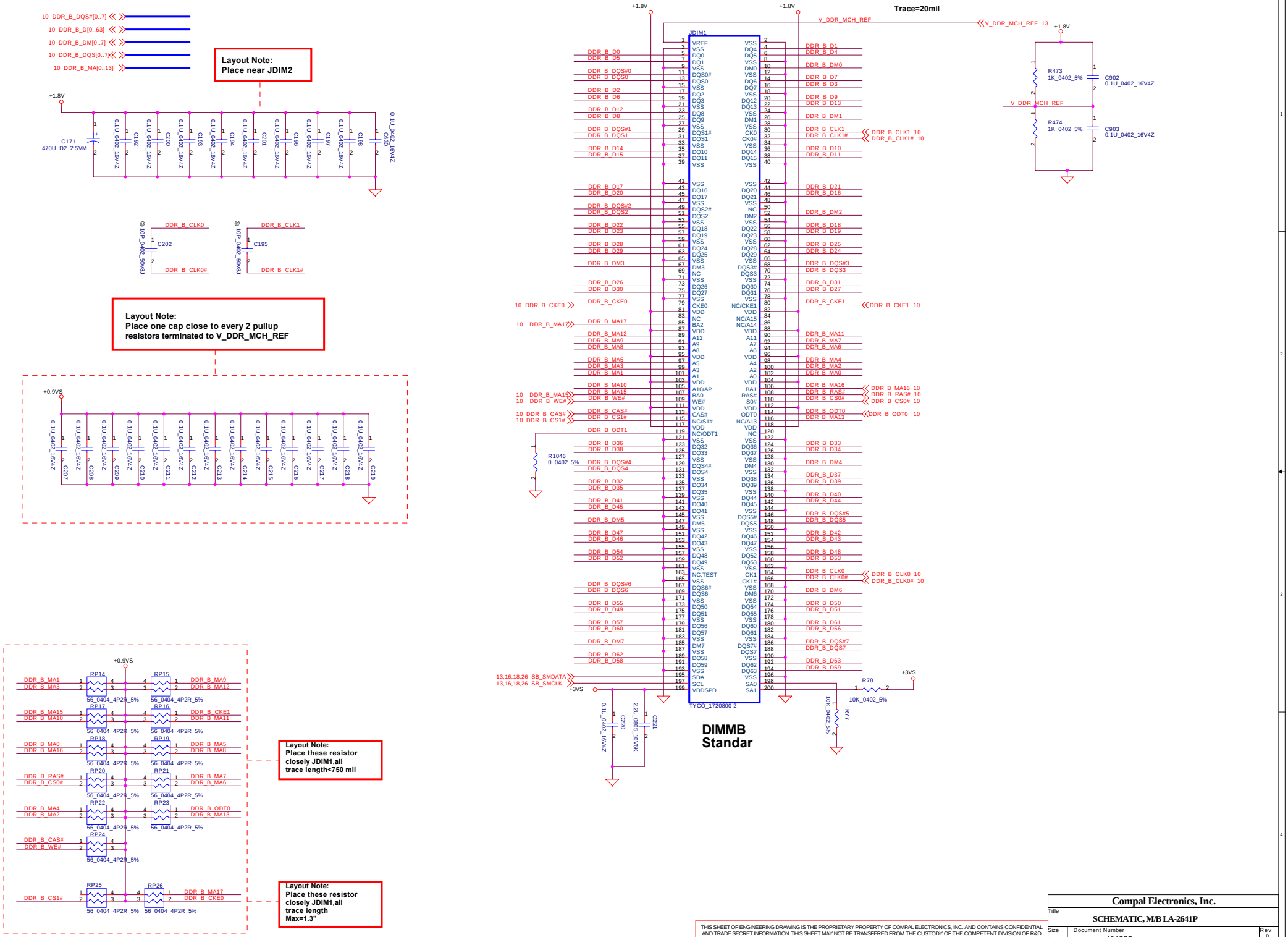


| | |
|---|---|
| Compal Electronics, Inc. | |
| Title | SCHEMATIC, M/B LA-2641P |
| Size | Document Number 401335 |
| Rev | B |
| Date: 星期三, 四月 13, 2005 | Sheet 14 of 48 |

THIS SHEET OF ENGINEERING DRAWING IS THE PROPRIETARY PROPERTY OF COMPAL ELECTRONICS, INC. AND CONTAINS CONFIDENTIAL AND TRADE SECRET INFORMATION. THIS SHEET MAY NOT BE TRANSFERED FROM THE CUSTODY OF THE COMPETENT DIVISION OF R&D DEPARTMENT EXCEPT AS AUTHORIZED BY COMPAL ELECTRONICS, INC. NEITHER THIS SHEET NOR THE INFORMATION IT CONTAINS MAY BE USED BY OR DISCLOSED TO ANY THIRD PARTY WITHOUT PRIOR WRITTEN CONSENT OF COMPAL ELECTRONICS, INC.

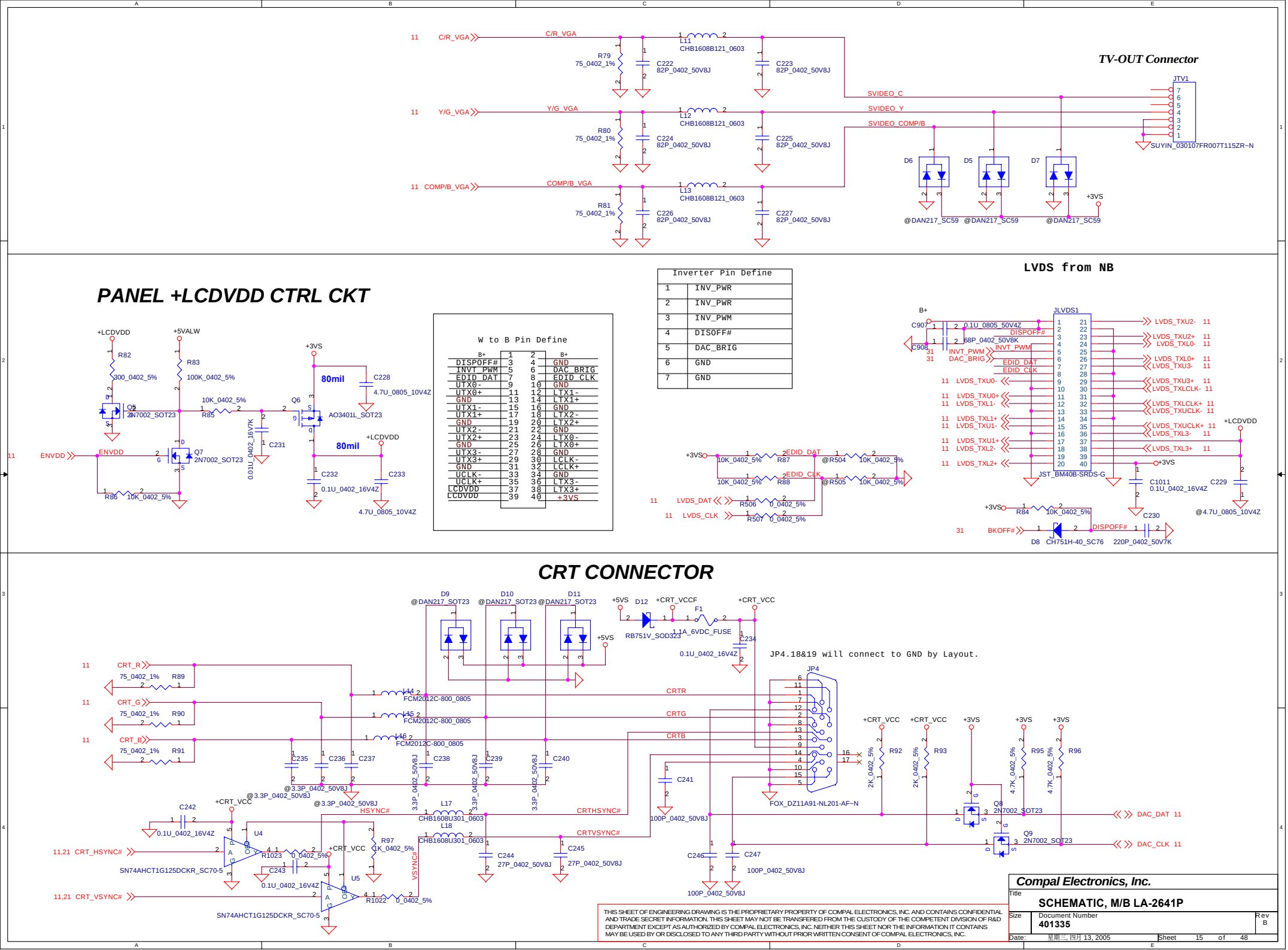
TV-OUT Connector
JTV1
SUYIN_030107FR007T115ZR-N
C/R_VGA
Y/G_VGA
COMP/B_VGA
SVIDEO_C
SVIDEO_Y
SVIDEO_COMP/B
L11 CHB1608B121_0603
L12 CHB1608B121_0603
L13 CHB1608B121_0603
R79 75_0402_1%
R80 75_0402_1%
R81 75_0402_1%
C222 82P_0402_50V8J
C223 82P_0402_50V8J
C224 82P_0402_50V8J
C225 82P_0402_50V8J
C226 82P_0402_50V8J
C227 82P_0402_50V8J
D6 D5 D7
@DAN217_SC59
+3VS
PANEL +LCDVDD CTRL CKT
+LCDVDD
+5VALW
+3VS
R82 300_0402_5%
R83 100K_0402_5%
R85 10K_0402_5%
R86 10K_0402_5%
Q5 2N7002_SOT23
Q6 AO3401L_SOT23
Q7 2N7002_SOT23
ENVDD
C231 0.01U_0402_16V7K
C228 4.7U_0805_10V4Z
C232 0.1U_0402_16V4Z
C233 4.7U_0805_10V4Z
80mil
W to B Pin Define
Inverter Pin Define
INV_PWR
INV_PWM
DISOFF#
DAC_BRIG
GND
LVDS from NB
JLVDS1
JST_BM40B-SRDS-G
B+
C907 0.1U_0805_50V4Z
C908 68P_0402_50V8K
DISPOFF#
INVT_PWM
DAC_BRIG
EDID_DAT
EDID_CLK
LVDS_TXU0-
LVDS_TXU0+
LVDS_TXU1-
LVDS_TXU1+
LVDS_TXL1+
LVDS_TXL2-
LVDS_TXL2+
LVDS_TXU2-
LVDS_TXU2+
LVDS_TXL0-
LVDS_TXL0+
LVDS_TXU3-
LVDS_TXU3+
LVDS_TXLCLK-
LVDS_TXLCLK+
LVDS_TXUCLK-
LVDS_TXUCLK+
LVDS_TXL3-
LVDS_TXL3+
C1011 0.1U_0402_16V4Z
C229 4.7U_0805_10V4Z
C230
R84 10K_0402_5%
D8 CH751H-40_SC76
220P_0402_50V7K
BKOFF#
R87 10K_0402_5%
R88 10K_0402_5%
R506 0_0402_5%
R507 0_0402_5%
@R504 10K_0402_5%
@R505 10K_0402_5%
CRT CONNECTOR
D9 D10 D11 @DAN217_SOT23
D12 RB751V_SOD323
F1 1.1A_6VDC_FUSE
+CRT_VCCF
+CRT_VCC
C234 0.1U_0402_16V4Z
JP4.18&19 will connect to GND by Layout.
JP4
FOX_DZ11A91-NL201-AF-N
CRT_R
CRT_G
CRT_B
R89 75_0402_1%
R90 75_0402_1%
R91 75_0402_1%
L14 FCM2012C-800_0805
L15 FCM2012C-800_0805
L16 FCM2012C-800_0805
CRTR
CRTG
CRTB
C235 C236 C237 C238 C239 C240 C241
@3.3P_0402_50V8J
3.3P_0402_50V8J
100P_0402_50V8J
C242 0.1U_0402_16V4Z
U4 SN74AHCT1G125DCKR_SC70-5
U5 SN74AHCT1G125DCKR_SC70-5
R1023 0_0402_5%
R1022 0_0402_5%
C243 0.1U_0402_16V4Z
R97 1K_0402_5%
HSYNC#
VSYNC#
CRTHSYNC#
CRTVSYNC#
L17 CHB1608U301_0603
L18 CHB1608U301_0603
C244 27P_0402_50V8J
C245 27P_0402_50V8J
C246 100P_0402_50V8J
C247 100P_0402_50V8J
CRT_HSYNC#
CRT_VSYNC#
R92 2K_0402_5%
R93 2K_0402_5%
R95 4.7K_0402_5%
R96 4.7K_0402_5%
Q8 2N7002_SOT23
Q9 2N7002_SOT23
DAC_DAT
DAC_CLK
Compal Electronics, Inc.
Title
SCHEMATIC, M/B LA-2641P
Size
Document Number
401335
Rev B
Date: 星期二, 四月 13, 2005
Sheet 15 of 48
THIS SHEET OF ENGINEERING DRAWING IS THE PROPRIETARY PROPERTY OF COMPAL ELECTRONICS, INC. AND CONTAINS CONFIDENTIAL AND TRADE SECRET INFORMATION. THIS SHEET MAY NOT BE TRANSFERED FROM THE CUSTODY OF THE COMPETENT DIVISION OF R&D DEPARTMENT EXCEPT AS AUTHORIZED BY COMPAL ELECTRONICS, INC. NEITHER THIS SHEET NOR THE INFORMATION IT CONTAINS MAY BE USED BY OR DISCLOSED TO ANY THIRD PARTY WITHOUT PRIOR WRITTEN CONSENT OF COMPAL ELECTRONICS, INC.

# Clock Generator

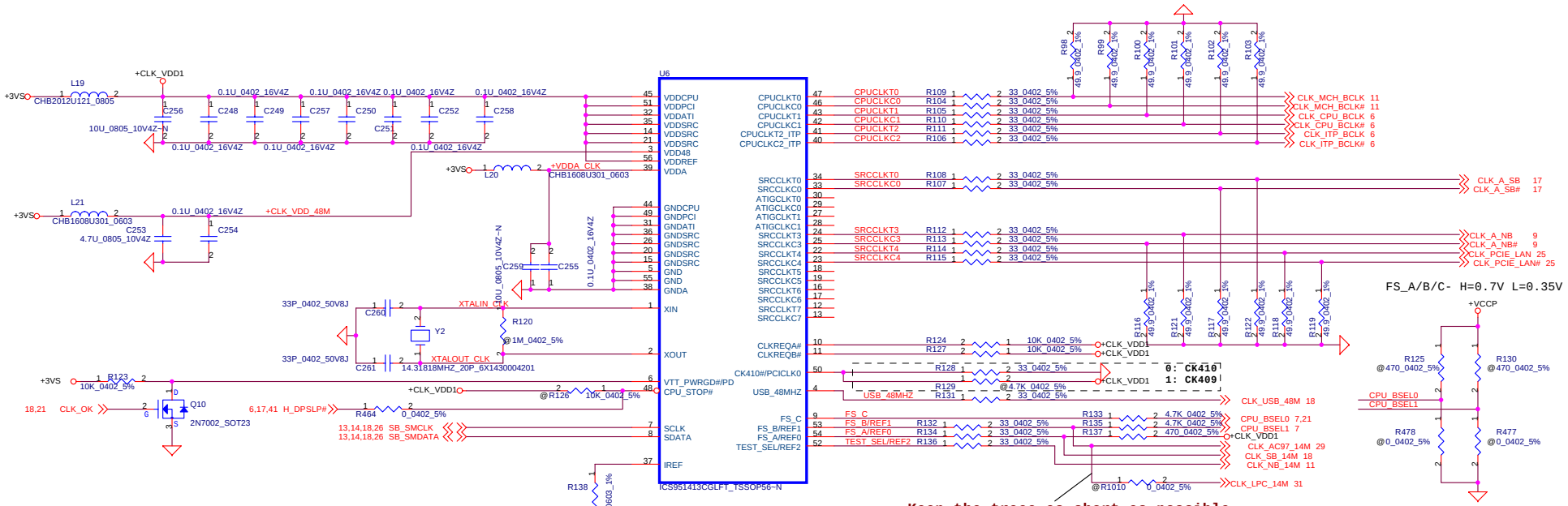


**ICS951411 AND CY28RS400 ARE FULLY PIN COMPATIBLE AND CAN BE INTERCHANGED WITHOUT ANY HARDWARE MODIFICATION.**

Internal Pull-low 120k: pin48
Internal Pull-up 120k: pin 52, 53 and 54.

| FS_C | FS_B | FS_A | CPU | SRC | PCI | REF | USB |
|---|---|---|---|---|---|---|---|
| 0 | 0 | 0 | 266.66 | 100.00 | 33.33 | 14.318 | 48.000 |
| | | 1 | 133.33 | 100.00 | 33.33 | 14.318 | 48.000 |
| | 1 | 0 | 200.00 | 100.00 | 33.33 | 14.318 | 48.000 |
| | | 1 | 166.66 | 100.00 | 33.33 | 14.318 | 48.000 |
| 1 | 0 | 1 | 100.00 | 100.00 | 33.33 | 14.318 | 48.000 |
| | 1 | 0 | 400.00 | 100.00 | 33.33 | 14.318 | 48.000 |
| | | 1 | RESERVED | | | 14.318 | 48.000 |

THIS SHEET OF ENGINEERING DRAWING IS THE PROPRIETARY PROPERTY OF COMPAL ELECTRONICS, INC. AND CONTAINS CONFIDENTIAL AND TRADE SECRET INFORMATION. THIS SHEET MAY NOT BE TRANSFERED FROM THE CUSTODY OF THE COMPETENT DIVISION OF R&D DEPARTMENT EXCEPT AS AUTHORIZED BY COMPAL ELECTRONICS, INC. NEITHER THIS SHEET NOR THE INFORMATION IT CONTAINS MAY BE USED BY OR DISCLOSED TO ANY THIRD PARTY WITHOUT PRIOR WRITTEN CONSENT OF COMPAL ELECTRONICS, INC.

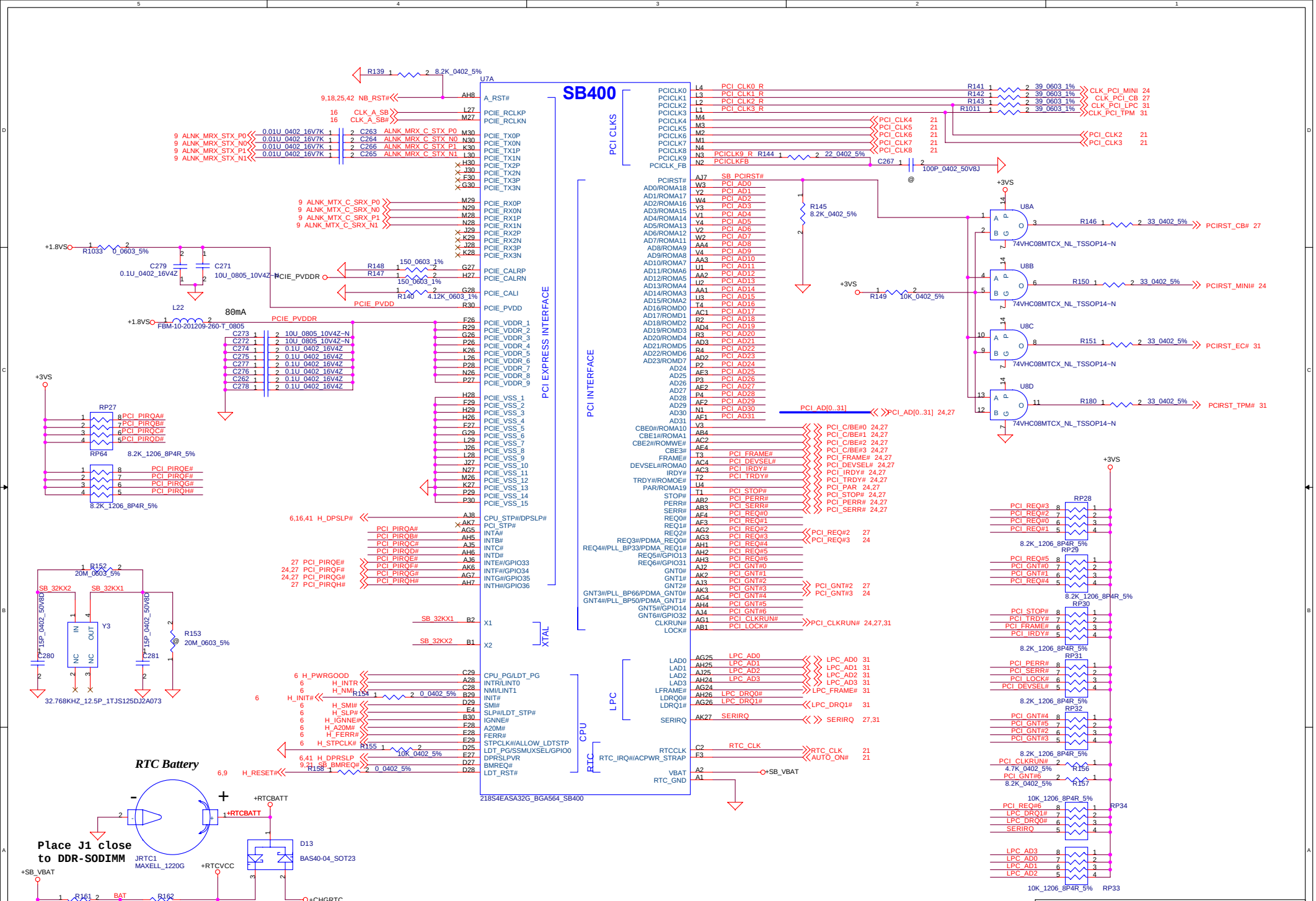


THIS SHEET OF ENGINEERING DRAWING IS THE PROPRIETARY PROPERTY OF COMPAL ELECTRONICS, INC. AND CONTAINS CONFIDENTIAL AND TRADE SECRET INFORMATION. THIS SHEET MAY NOT BE TRANSFERED FROM THE CUSTODY OF THE COMPETENT DIVISION OF R&D DEPARTMENT EXCEPT AS AUTHORIZED BY COMPAL ELECTRONICS, INC. NEITHER THIS SHEET NOR THE INFORMATION IT CONTAINS MAY BE USED BY OR DISCLOSED TO ANY THIRD PARTY WITHOUT PRIOR WRITTEN CONSENT OF COMPAL ELECTRONICS, INC.

| | |
|---|---|
| Compal Electronics, Inc. | |
| Title | SCHEMATIC, M/B LA-2641P |
| Size | Document Number 401335 |
| Rev | B |
| Date: 星期三, 四月 13, 2005 | Sheet 17 of 48 |

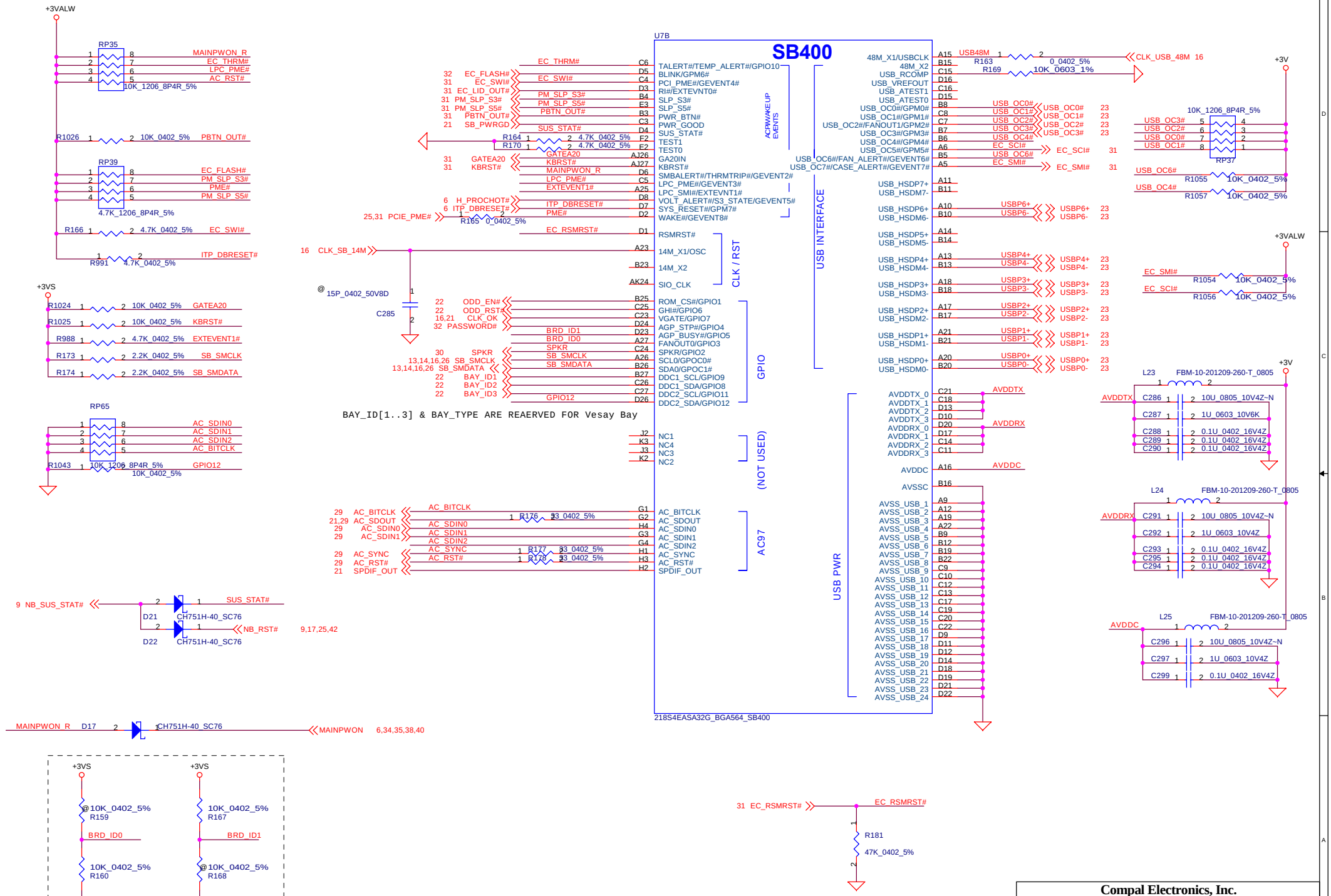


THIS SHEET OF ENGINEERING DRAWING IS THE PROPRIETARY PROPERTY OF COMPAL ELECTRONICS, INC. AND CONTAINS CONFIDENTIAL AND TRADE SECRET INFORMATION. THIS SHEET MAY NOT BE TRANSFERED FROM THE CUSTODY OF THE COMPETENT DIVISION OF R&D DEPARTMENT EXCEPT AS AUTHORIZED BY COMPAL ELECTRONICS, INC. NEITHER THIS SHEET NOR THE INFORMATION IT CONTAINS MAY BE USED BY OR DISCLOSED TO ANY THIRD PARTY WITHOUT PRIOR WRITTEN CONSENT OF COMPAL ELECTRONICS, INC.

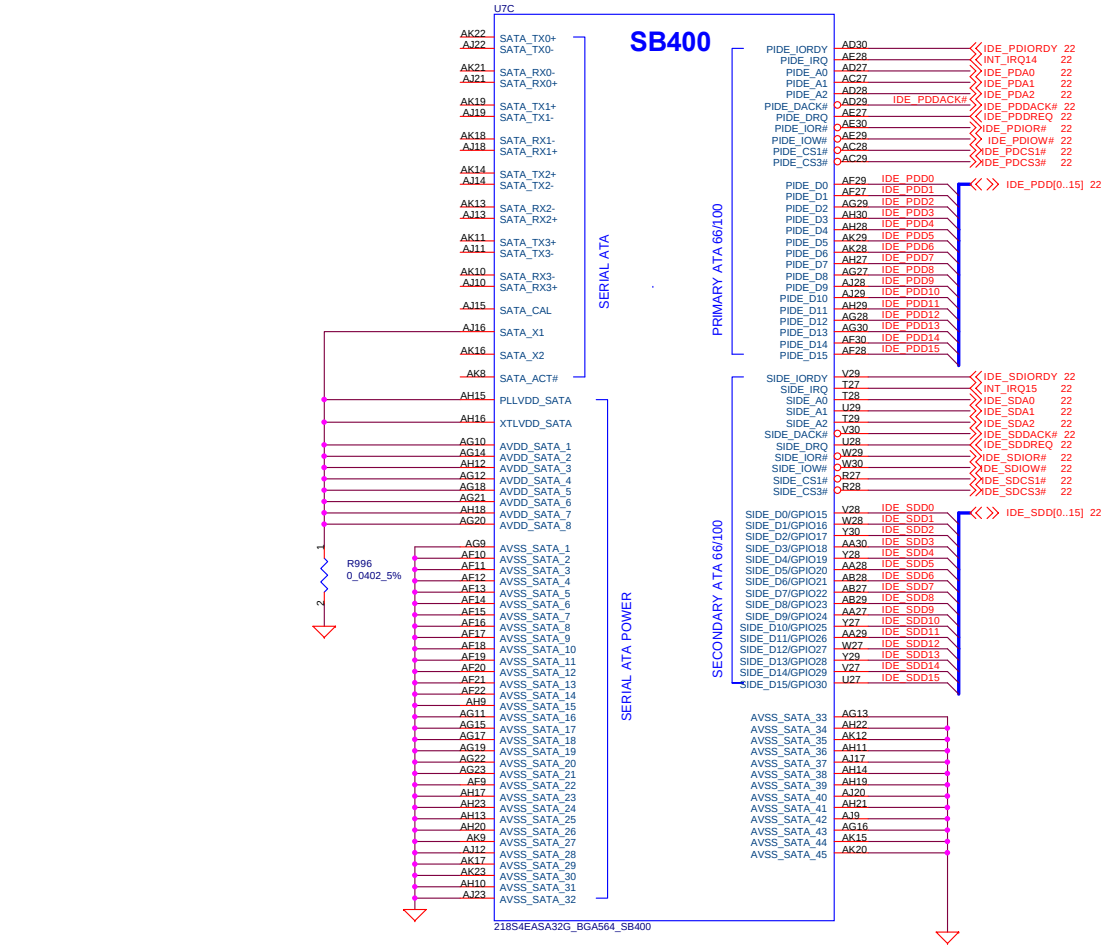


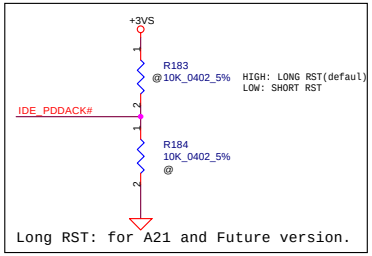


THIS SHEET OF ENGINEERING DRAWING IS THE PROPRIETARY PROPERTY OF COMPAL ELECTRONICS, INC. AND CONTAINS CONFIDENTIAL AND TRADE SECRET INFORMATION. THIS SHEET MAY NOT BE TRANSFERED FROM THE CUSTODY OF THE COMPETENT DIVISION OF R&D DEPARTMENT EXCEPT AS AUTHORIZED BY COMPAL ELECTRONICS, INC. NEITHER THIS SHEET NOR THE INFORMATION IT CONTAINS MAY BE USED BY OR DISCLOSED TO ANY THIRD PARTY WITHOUT PRIOR WRITTEN CONSENT OF COMPAL ELECTRONICS, INC.

**Compal Electronics, Inc.**

Title: **SCHEMATIC, M/B LA-2641P**

Size | Document Number: 401335 | Rev: B

Date: 星期三, 四月 13, 2005 | Sheet 19 of 48

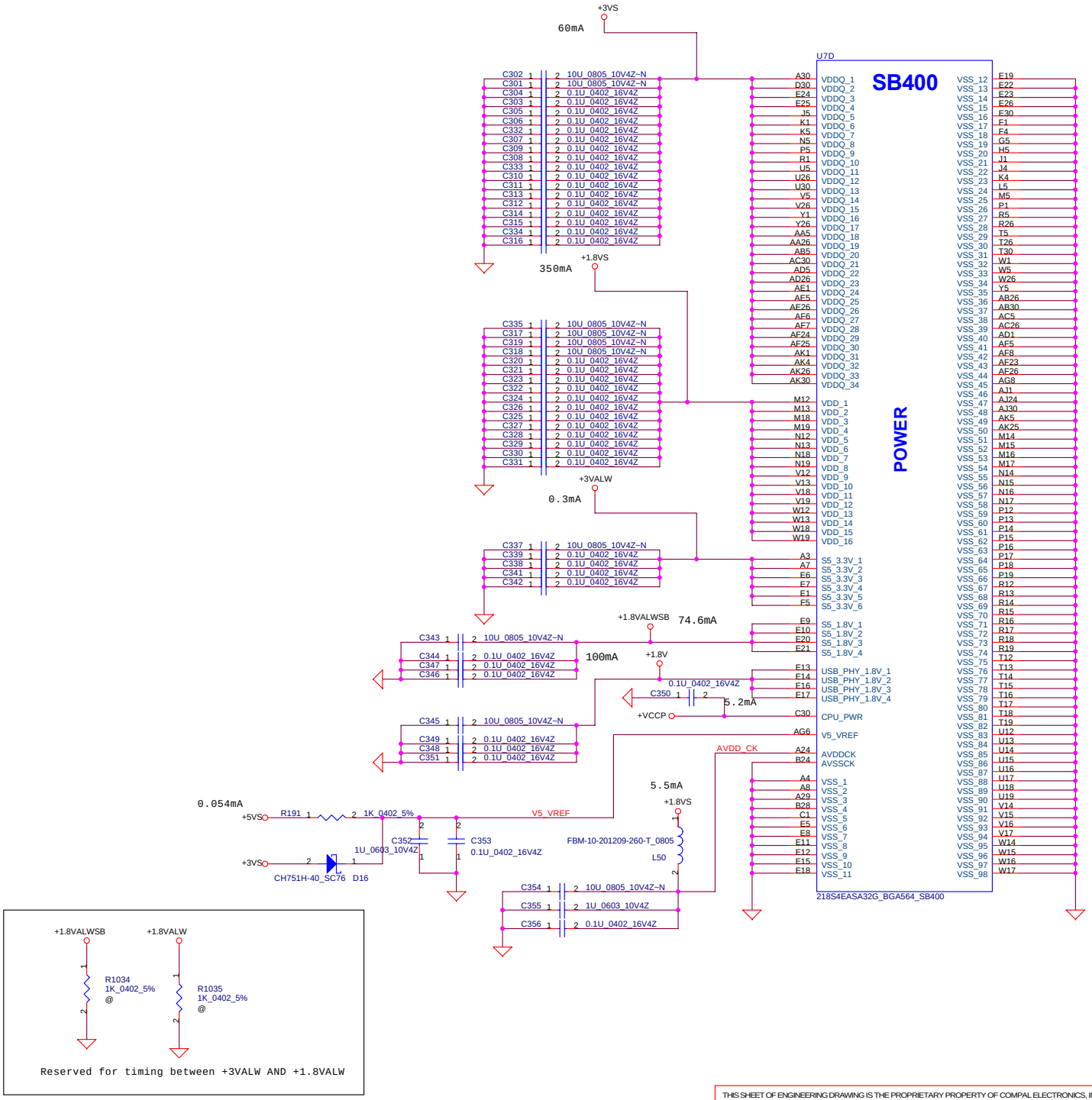


THIS SHEET OF ENGINEERING DRAWING IS THE PROPRIETARY PROPERTY OF COMPAL ELECTRONICS, INC. AND CONTAINS CONFIDENTIAL AND TRADE SECRET INFORMATION. THIS SHEET MAY NOT BE TRANSFERED FROM THE CUSTODY OF THE COMPETENT DIVISION OF R&D DEPARTMENT EXCEPT AS AUTHORIZED BY COMPAL ELECTRONICS, INC. NEITHER THIS SHEET NOR THE INFORMATION IT CONTAINS MAY BE USED BY OR DISCLOSED TO ANY THIRD PARTY WITHOUT PRIOR WRITTEN CONSENT OF COMPAL ELECTRONICS, INC.

| | | | |
|---|---|---|---|
| Compal Electronics, Inc. | | | |
| Title | SCHEMATIC, M/B LA-2641P | | |
| Size | Document Number 401335 | | Rev B |
| Date: 星期三, 四月 13, 2005 | Sheet 20 of 48 | | |

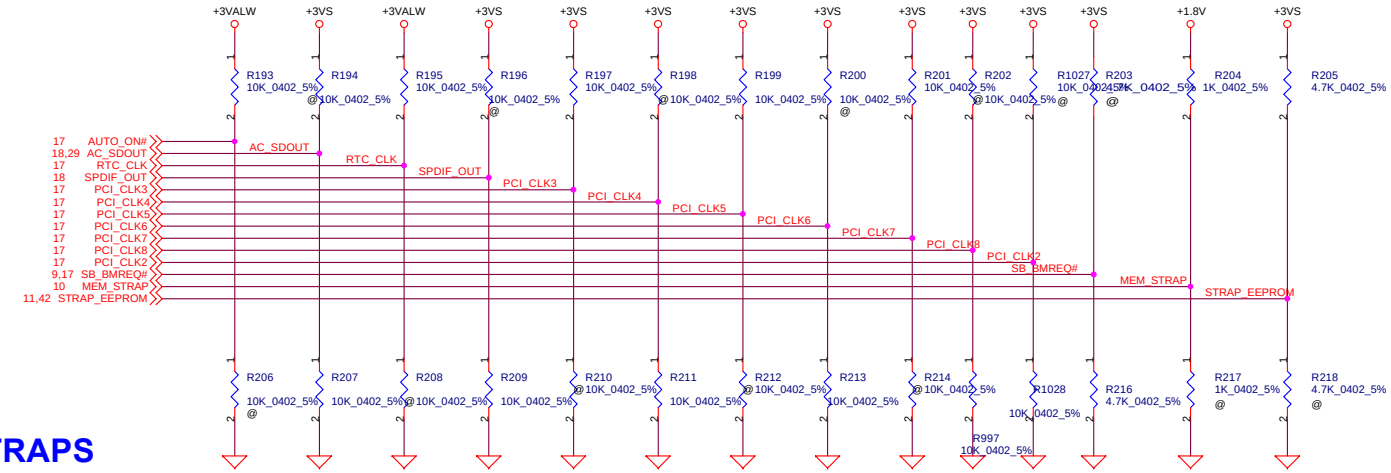


# REQUIRED STRAPS

| | AUTO_ON# | AC97_SDOUT | RTC_CLK | SPDIF_OUT | PCI_CLK3 | PCI_CLK4 | PCI_CLK5 | PCI_CLK6 | PCI_CLK7 PCI_CLK8 | SB_BMREQ# | MEM_STRAP | STRAP_EEPROM |
|---|---|---|---|---|---|---|---|---|---|---|---|---|
| PULL HIGH | MANUAL PWR ON DEFAULT | USE DEBUG STRAPS | INTERNAL RTC DEFAULT | SIO 24MHz | USB PHY PWRDOWN DISABLE | Use internal PLL for 48MHZ | PCIE_CM SET LOW | CPU I/F = AMD | ROM TYPE H,H = PCI ROM H,L = PMC LPC ROM DEFAULT | | 1.8V DDR | EEPROM STRAP |
| PULL LOW | AUTO PWR ON | IGNORE DEBUG STRAPS DEFAULT | EXTERNAL RTC (NOT SUPPORTED W/ IT8712 ) | SIO 48MHz DEFAULT | USB PHY PWRDOWN ENABLE DEFAULT | 48MHz XTAL MODE DEFAULT | PCIE_CM SET HIGH DEFAULT | CPU I/F = INTEL DEFAULT | L,H = NORMAL LPC ROM L,L = FWH ROM | 0= NORMAL (Default) | 2.5V DDR | MEM CHANNEL |

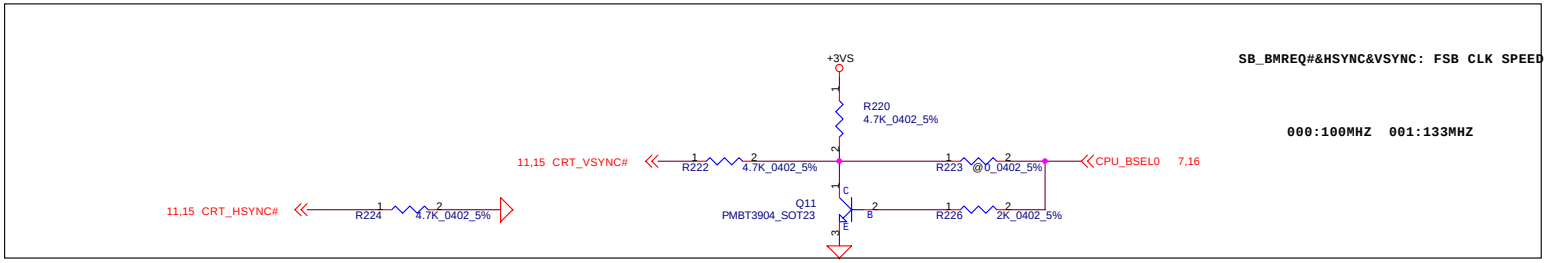


**U32-->please close to SB400(U16)**

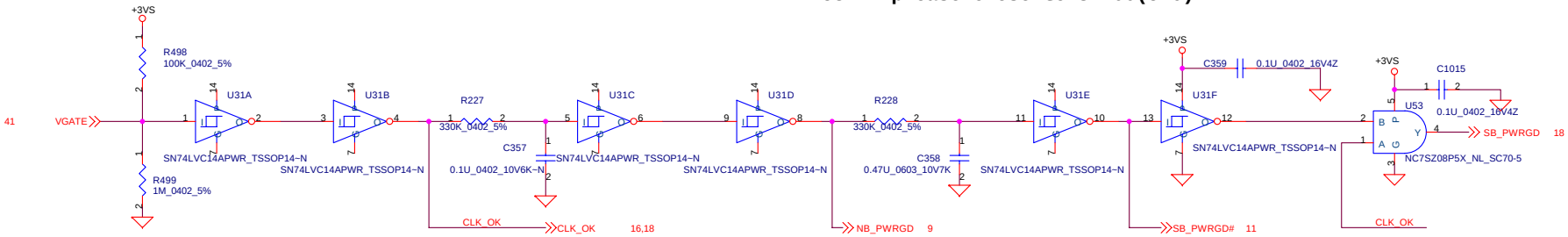


THIS SHEET OF ENGINEERING DRAWING IS THE PROPRIETARY PROPERTY OF COMPAL ELECTRONICS, INC. AND CONTAINS CONFIDENTIAL AND TRADE SECRET INFORMATION. THIS SHEET MAY NOT BE TRANSFERED FROM THE CUSTODY OF THE COMPETENT DIVISION OF R&D DEPARTMENT EXCEPT AS AUTHORIZED BY COMPAL ELECTRONICS, INC. NEITHER THIS SHEET NOR THE INFORMATION IT CONTAINS MAY BE USED BY OR DISCLOSED TO ANY THIRD PARTY WITHOUT PRIOR WRITTEN CONSENT OF COMPAL ELECTRONICS, INC.

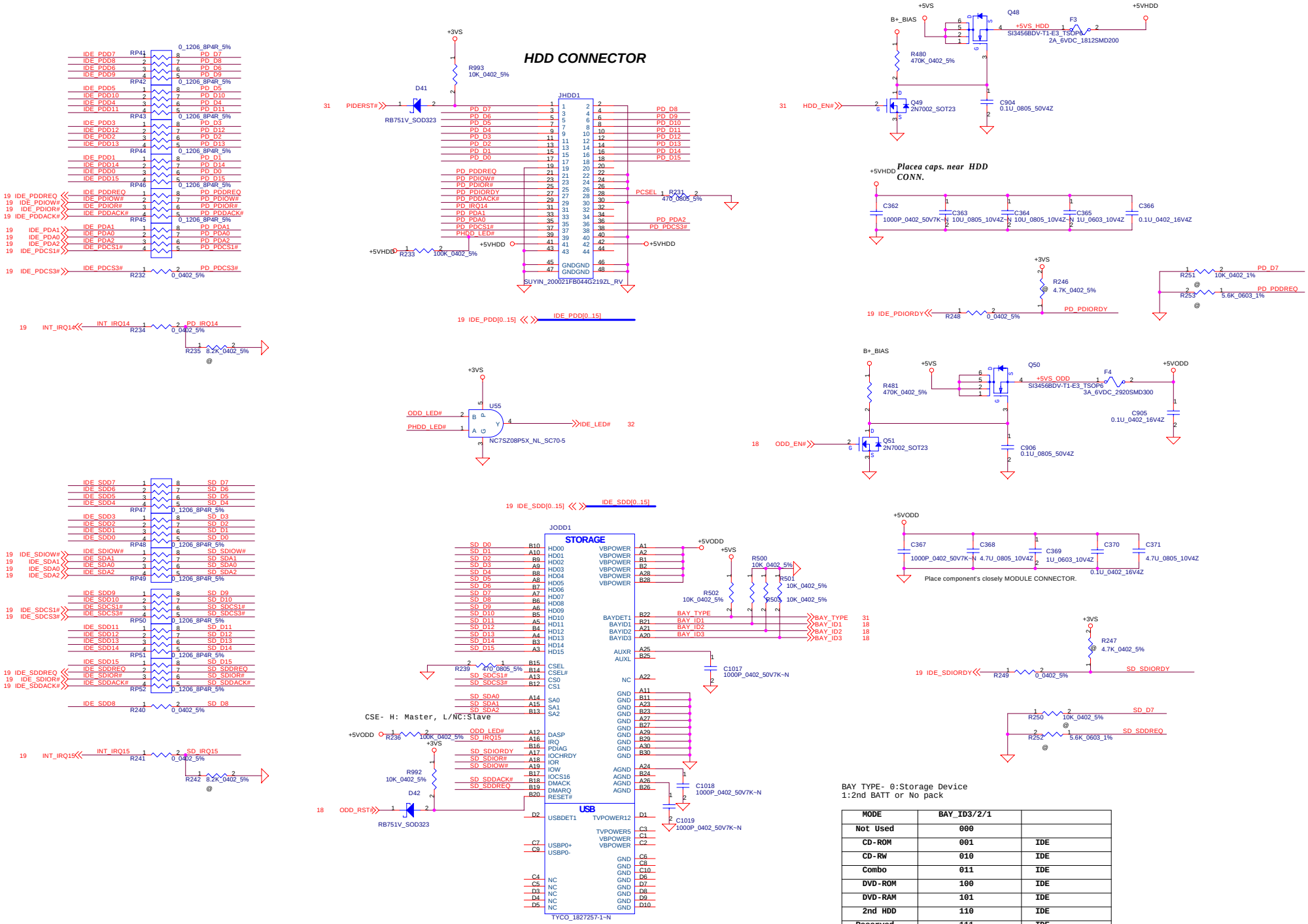


| MODE | BAY_ID3/2/1 | |
|---|---|---|
| Not Used | 000 | |
| CD-ROM | 001 | IDE |
| CD-RW | 010 | IDE |
| Combo | 011 | IDE |
| DVD-ROM | 100 | IDE |
| DVD-RAM | 101 | IDE |
| 2nd HDD | 110 | IDE |
| Reserved | 111 | IDE |

THIS SHEET OF ENGINEERING DRAWING IS THE PROPRIETARY PROPERTY OF COMPAL ELECTRONICS, INC. AND CONTAINS CONFIDENTIAL AND TRADE SECRET INFORMATION. THIS SHEET MAY NOT BE TRANSFERED FROM THE CUSTODY OF THE COMPETENT DIVISION OF R&D DEPARTMENT EXCEPT AS AUTHORIZED BY COMPAL ELECTRONICS, INC. NEITHER THIS SHEET NOR THE INFORMATION IT CONTAINS MAY BE USED BY OR DISCLOSED TO ANY THIRD PARTY WITHOUT PRIOR WRITTEN CONSENT OF COMPAL ELECTRONICS, INC.

**Compal Electronics, Inc.**

Title: SCHEMATIC, M/B LA-2641P

Size | Document Number: 401335 | Rev: B

Date: 星 圖T, 四月 13, 2005 | Sheet 22 of 48

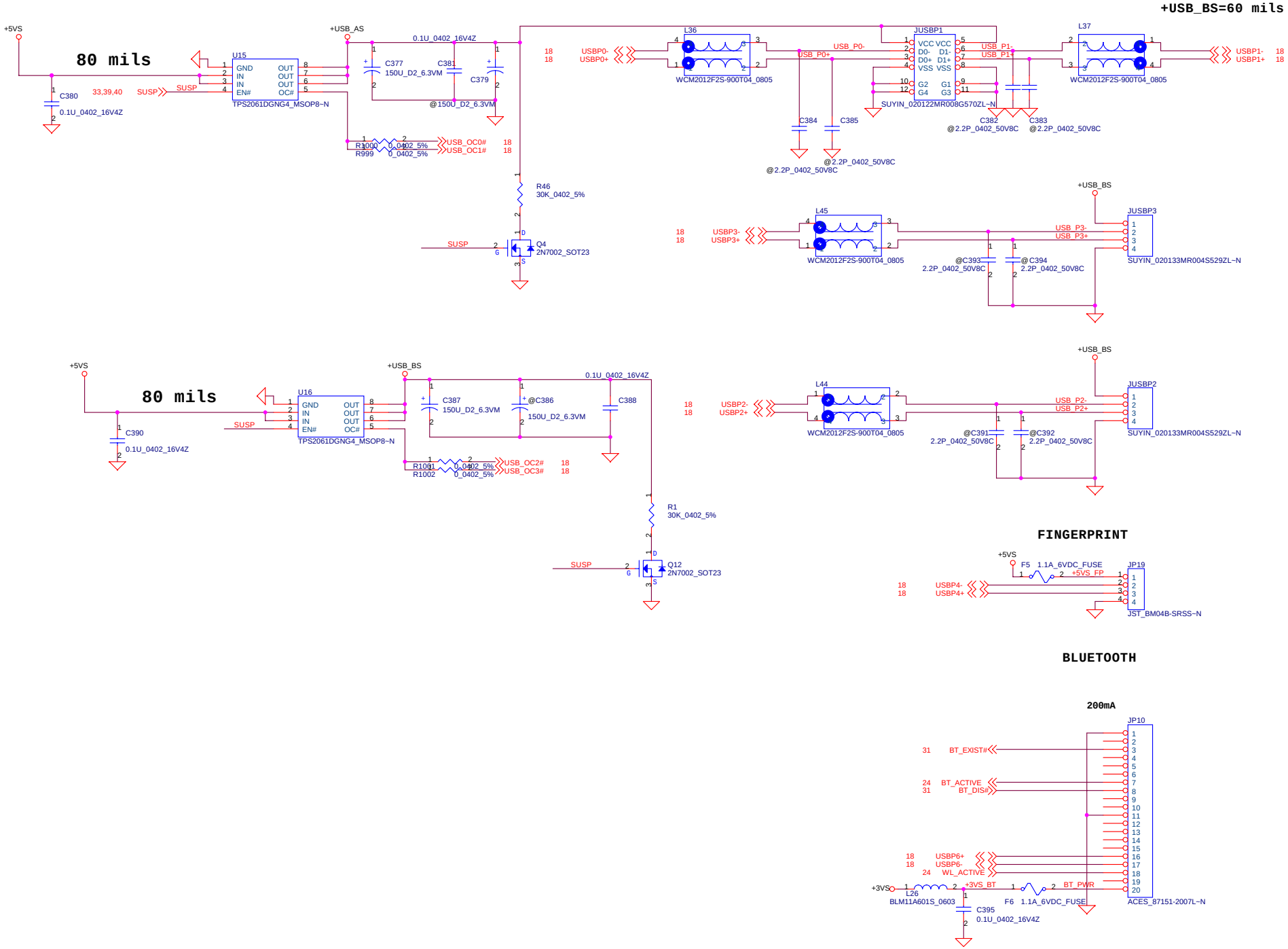


THIS SHEET OF ENGINEERING DRAWING IS THE PROPRIETARY PROPERTY OF COMPAL ELECTRONICS, INC. AND CONTAINS CONFIDENTIAL AND TRADE SECRET INFORMATION. THIS SHEET MAY NOT BE TRANSFERED FROM THE CUSTODY OF THE COMPETENT DIVISION OF R&D DEPARTMENT EXCEPT AS AUTHORIZED BY COMPAL ELECTRONICS, INC. NEITHER THIS SHEET NOR THE INFORMATION IT CONTAINS MAY BE USED BY OR DISCLOSED TO ANY THIRD PARTY WITHOUT PRIOR WRITTEN CONSENT OF COMPAL ELECTRONICS, INC.

**Compal Electronics, Inc.**

Title: **SCHEMATIC, M/B LA-2641P**

Size | Document Number: **401335** | Rev: B

Date: 星期三, 四月 13, 2005 | Sheet 23 of 48

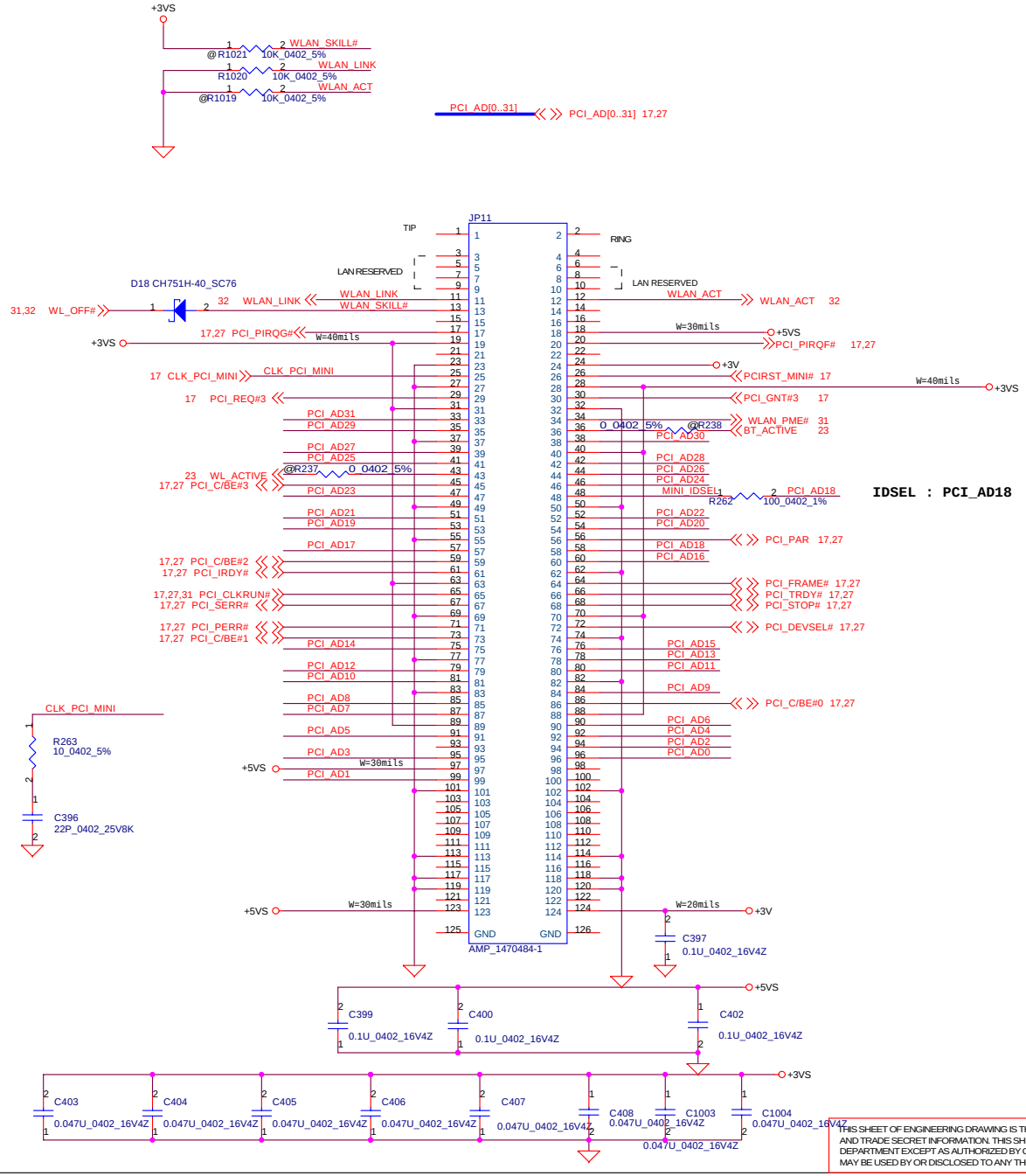


THIS SHEET OF ENGINEERING DRAWING IS THE PROPRIETARY PROPERTY OF COMPAL ELECTRONICS, INC. AND CONTAINS CONFIDENTIAL AND TRADE SECRET INFORMATION. THIS SHEET MAY NOT BE TRANSFERED FROM THE CUSTODY OF THE COMPETENT DIVISION OF R&D DEPARTMENT EXCEPT AS AUTHORIZED BY COMPAL ELECTRONICS, INC. NEITHER THIS SHEET NOR THE INFORMATION IT CONTAINS MAY BE USED BY OR DISCLOSED TO ANY THIRD PARTY WITHOUT PRIOR WRITTEN CONSENT OF COMPAL ELECTRONICS, INC.

**Compal Electronics, Inc.**

Title: **SCHEMATIC, M/B LA-2641P**

Size | Document Number: **401335** | Rev: B

Date: 星期三, 四月 13, 2005 | Sheet 24 of 48

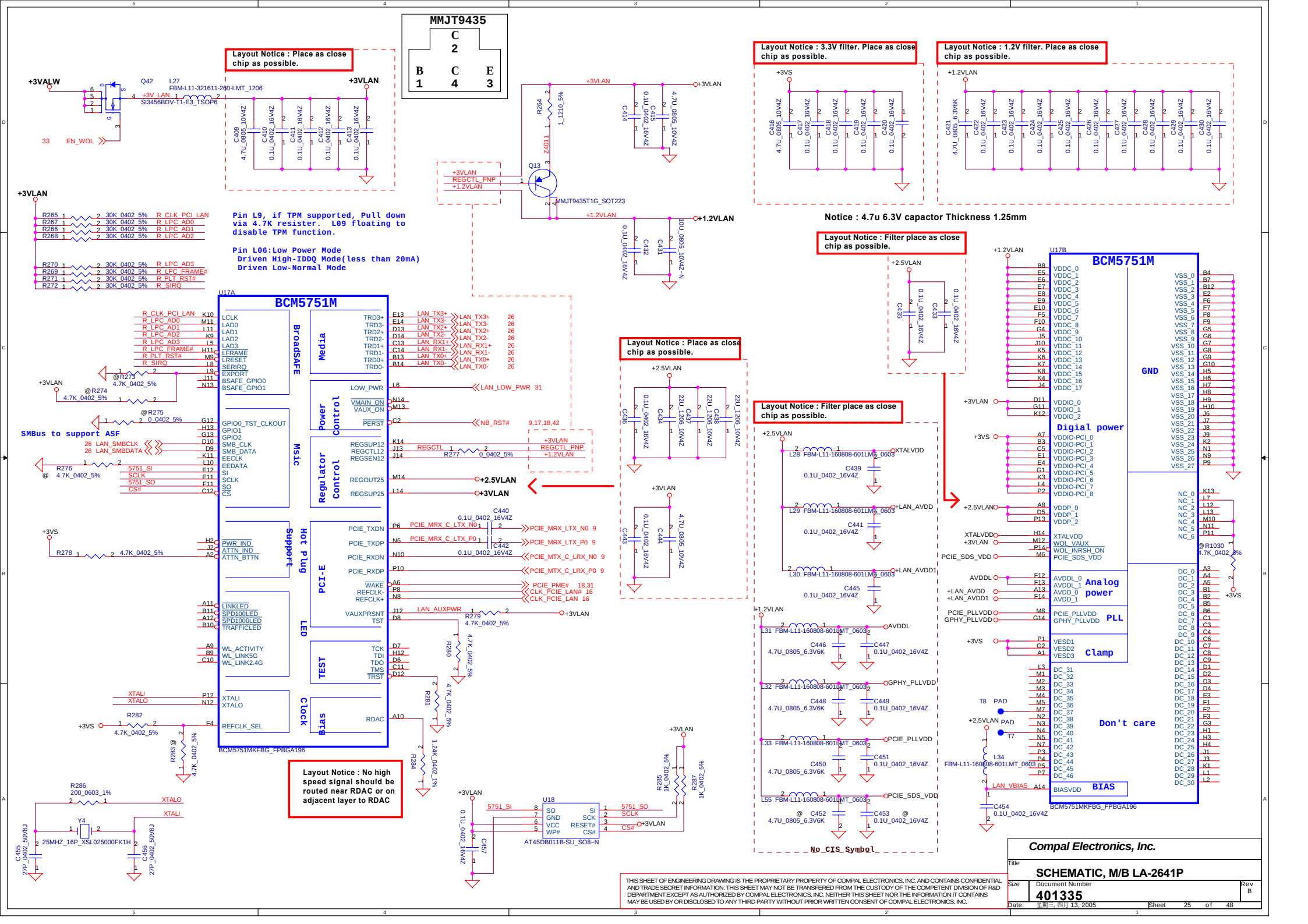

THIS SHEET OF ENGINEERING DRAWING IS THE PROPRIETARY PROPERTY OF COMPAL ELECTRONICS, INC. AND CONTAINS CONFIDENTIAL AND TRADE SECRET INFORMATION. THIS SHEET MAY NOT BE TRANSFERED FROM THE CUSTODY OF THE COMPETENT DIVISION OF R&D DEPARTMENT EXCEPT AS AUTHORIZED BY COMPAL ELECTRONICS, INC. NEITHER THIS SHEET NOR THE INFORMATION IT CONTAINS MAY BE USED BY OR DISCLOSED TO ANY THIRD PARTY WITHOUT PRIOR WRITTEN CONSENT OF COMPAL ELECTRONICS, INC.

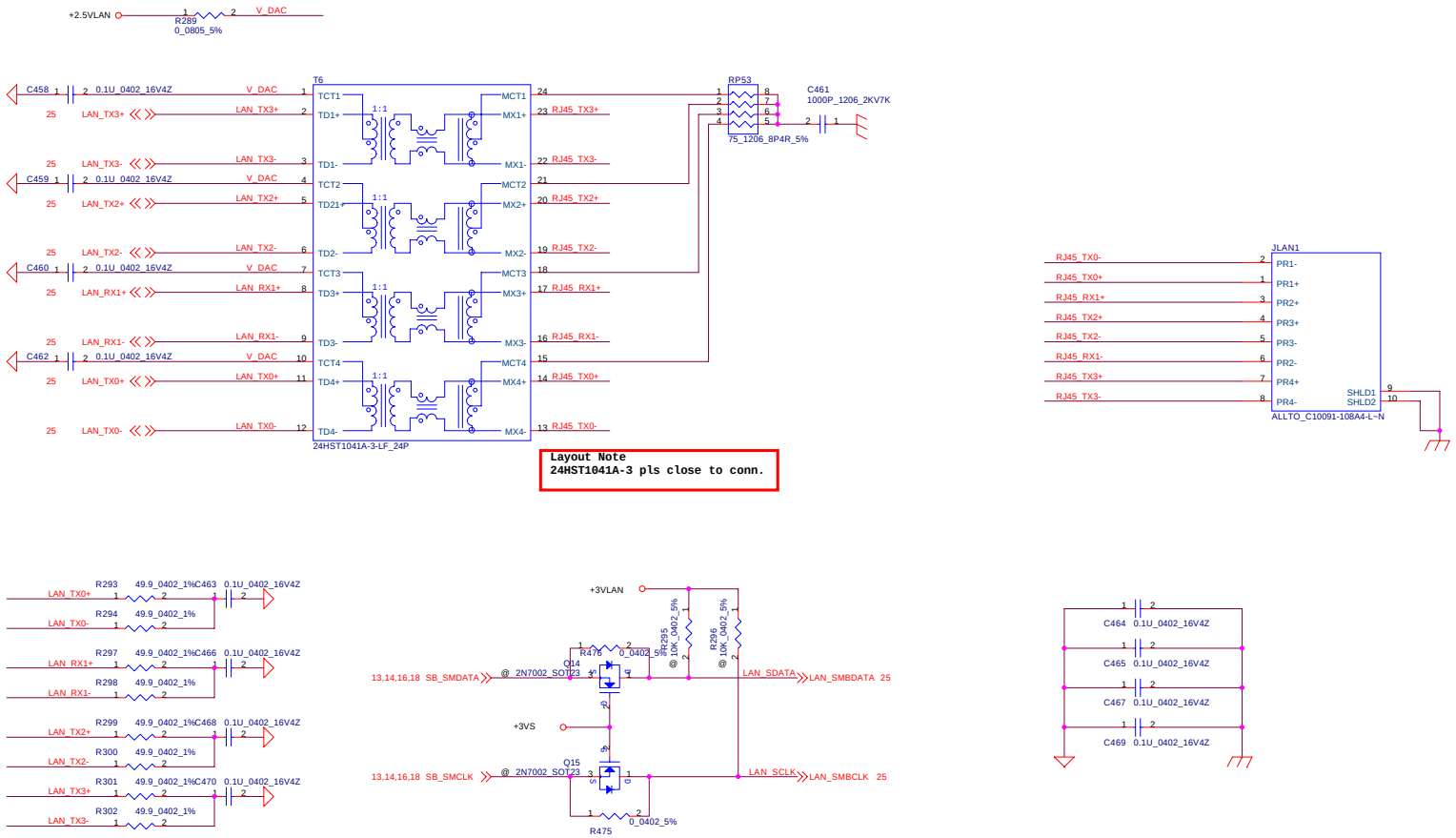


**All 49.9 ohm + 0.1 uF termination components close to BCM5751M**

THIS SHEET OF ENGINEERING DRAWING IS THE PROPRIETARY PROPERTY OF COMPAL ELECTRONICS, INC. AND CONTAINS CONFIDENTIAL AND TRADE SECRET INFORMATION. THIS SHEET MAY NOT BE TRANSFERED FROM THE CUSTODY OF THE COMPETENT DIVISION OF R&D DEPARTMENT EXCEPT AS AUTHORIZED BY COMPAL ELECTRONICS, INC. NEITHER THIS SHEET NOR THE INFORMATION IT CONTAINS MAY BE USED BY OR DISCLOSED TO ANY THIRD PARTY WITHOUT PRIOR WRITTEN CONSENT OF COMPAL ELECTRONICS, INC.

**Compal Electronics, Inc.**

Title: **SCHEMATIC, M/B LA-2641P**

Size | Document Number: **401335** | Rev: B

Date: 星期三, 四月 13, 2005 | Sheet 26 of 48

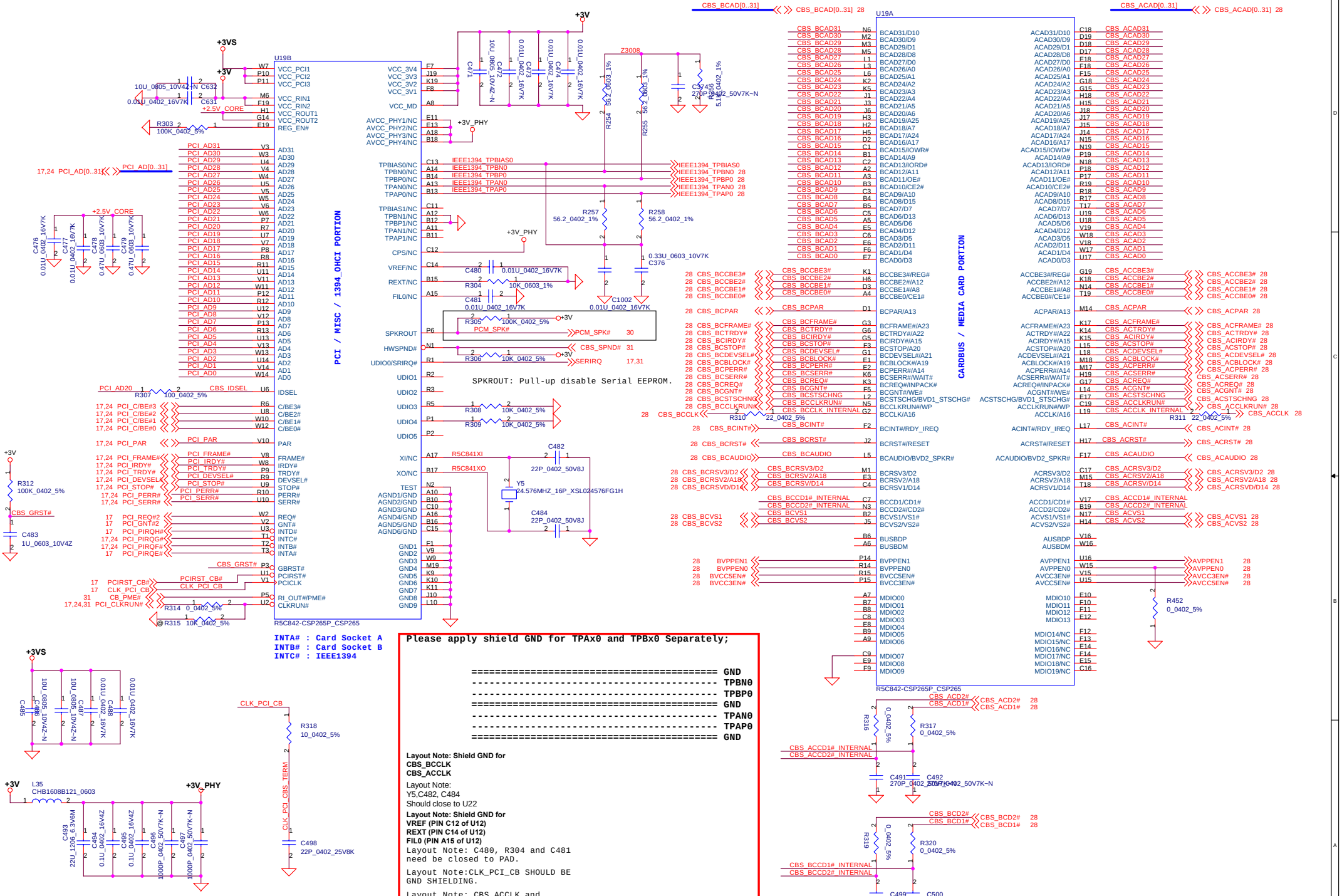


THIS SHEET OF ENGINEERING DRAWING IS THE PROPRIETARY PROPERTY OF COMPAL ELECTRONICS, INC. AND CONTAINS CONFIDENTIAL AND TRADE SECRET INFORMATION. THIS SHEET MAY NOT BE TRANSFERED FROM THE CUSTODY OF THE COMPETENT DIVISION OF R&D DEPARTMENT EXCEPT AS AUTHORIZED BY COMPAL ELECTRONICS, INC. NEITHER THIS SHEET NOR THE INFORMATION IT CONTAINS MAY BE USED BY OR DISCLOSED TO ANY THIRD PARTY WITHOUT PRIOR WRITTEN CONSENT OF COMPAL ELECTRONICS, INC.

| | |
|---|---|
| Compal Electronics, Inc. | |
| Title | SCHEMATIC, M/B LA-2641P |
| Size | Document Number 401335 |
| Rev | B |
| Date: 星期三, 四月 13, 2005 | Sheet 27 of 48 |

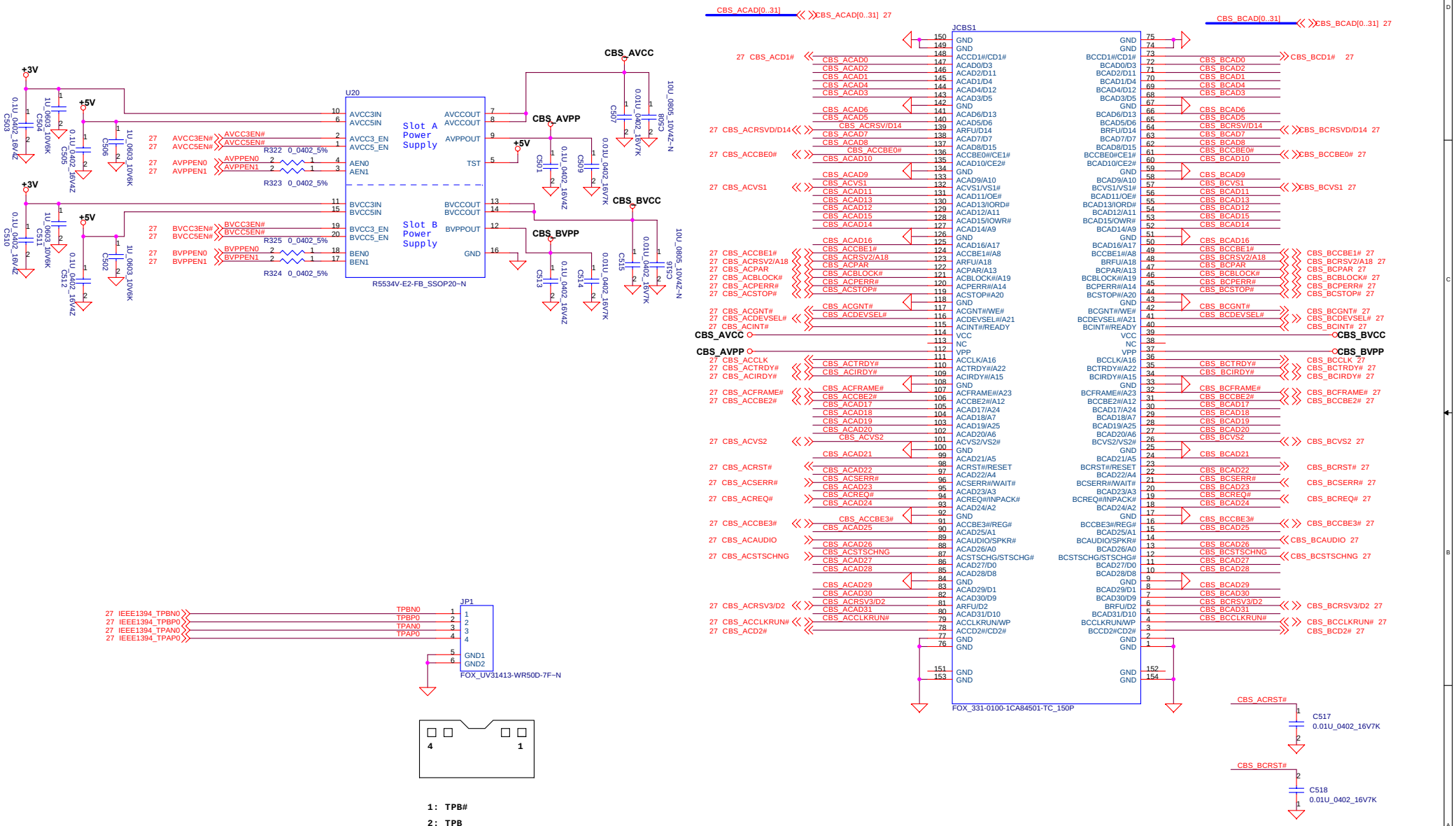


1: TPB#

2: TPB

3: TPA#

4: TPA

THIS SHEET OF ENGINEERING DRAWING IS THE PROPRIETARY PROPERTY OF COMPAL ELECTRONICS, INC. AND CONTAINS CONFIDENTIAL AND TRADE SECRET INFORMATION. THIS SHEET MAY NOT BE TRANSFERED FROM THE CUSTODY OF THE COMPETENT DIVISION OF R&D DEPARTMENT EXCEPT AS AUTHORIZED BY COMPAL ELECTRONICS, INC. NEITHER THIS SHEET NOR THE INFORMATION IT CONTAINS MAY BE USED BY OR DISCLOSED TO ANY THIRD PARTY WITHOUT PRIOR WRITTEN CONSENT OF COMPAL ELECTRONICS, INC.

**Compal Electronics, Inc.**

Title: SCHEMATIC, M/B LA-2641P

Size: | Document Number: 401335 | Rev: B

Date: 星期三, 四月 13, 2005 | Sheet 28 of 48

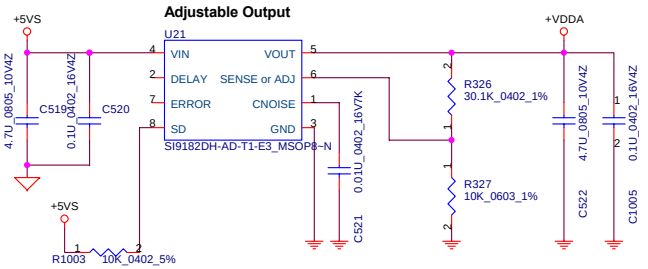


# MDC CONN.

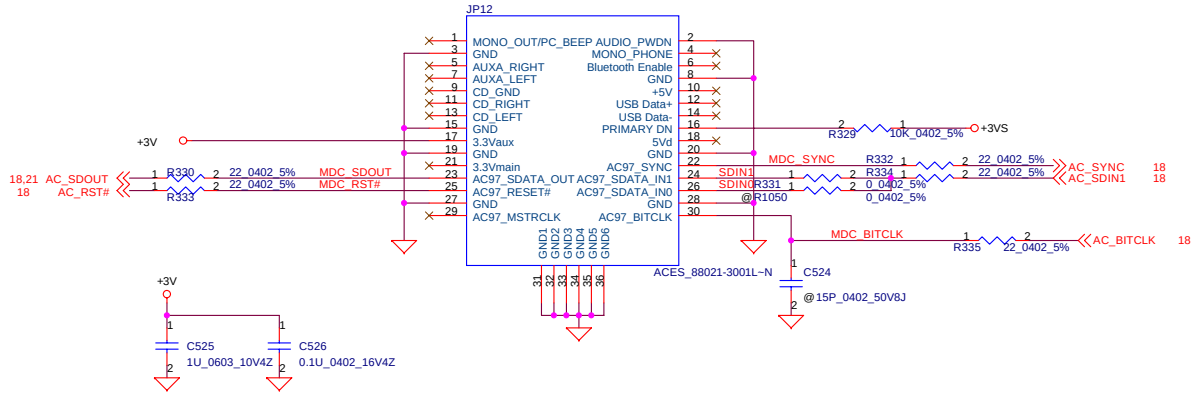


# AC97 Codec

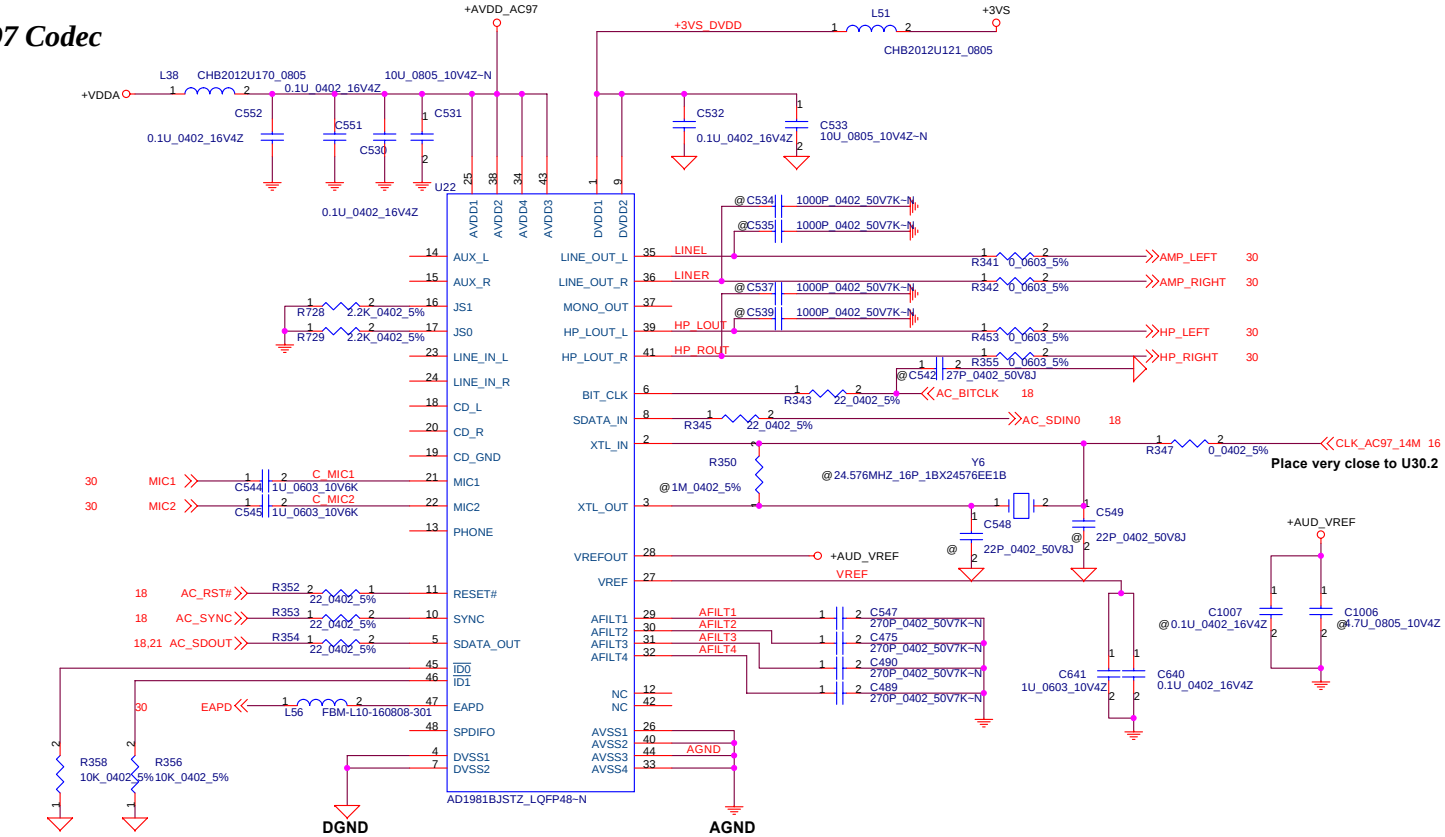


## Reserved for TEST

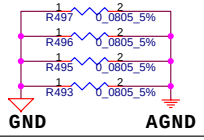


Add ID table

THIS SHEET OF ENGINEERING DRAWING IS THE PROPRIETARY PROPERTY OF COMPAL ELECTRONICS, INC. AND CONTAINS CONFIDENTIAL AND TRADE SECRET INFORMATION. THIS SHEET MAY NOT BE TRANSFERRED FROM THE CUSTODY OF THE COMPETENT DIVISION OF R&D DEPARTMENT EXCEPT AS AUTHORIZED BY COMPAL ELECTRONICS, INC. NEITHER THIS SHEET NOR THE INFORMATION IT CONTAINS MAY BE USED BY OR DISCLOSED TO ANY THIRD PARTY WITHOUT PRIOR WRITTEN CONSENT OF COMPAL ELECTRONICS, INC.

Compal Electronics, Inc.
Title: SCHEMATIC, M/B LA-2641P
Size: Document Number: 401335 Rev B
Date: 星期三, 四月 13, 2005 Sheet 29 of 48

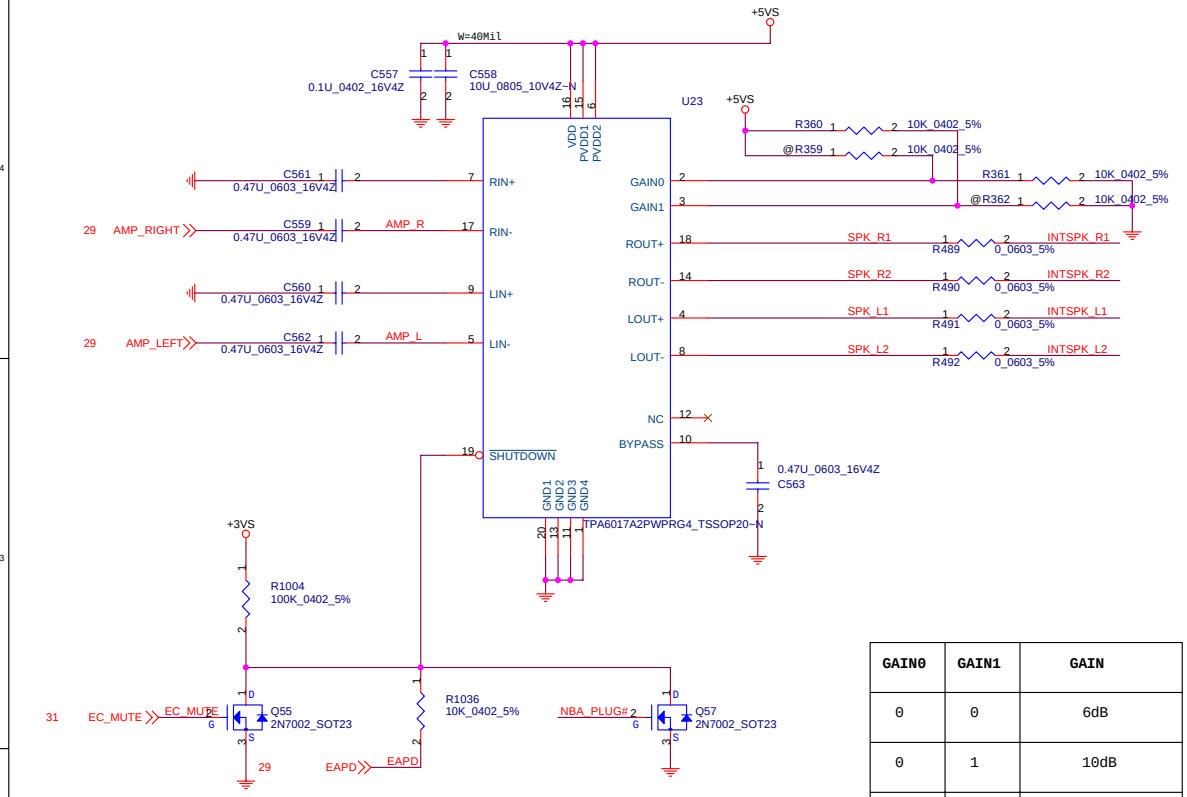


| GAIN0 | GAIN1 | GAIN |
|---|---|---|
| 0 | 0 | 6dB |
| 0 | 1 | 10dB |
| 1 | 0 | 15.6dB |
| 1 | 1 | 21.6dB |

Buzzer need to support ICH/PCM_SPK/Battery_low and WL_on/off

## Speaker Connector

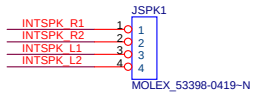


## MICROPHONE IN JACK

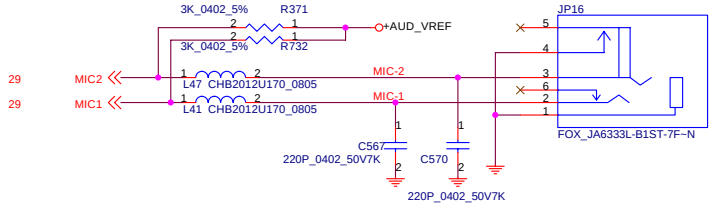


## HEADPHONE OUT JACK

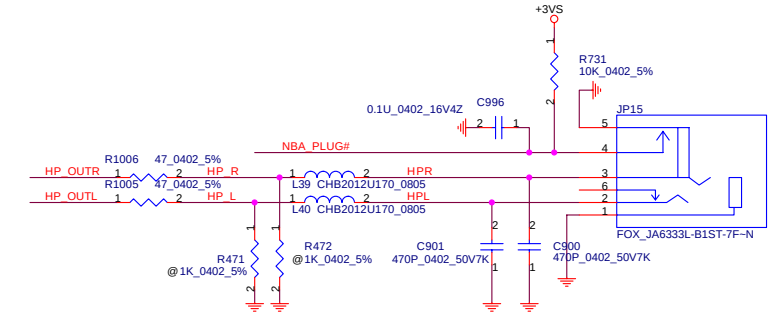


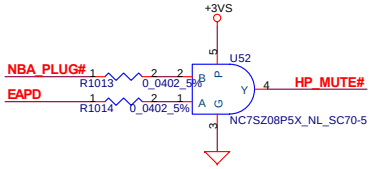


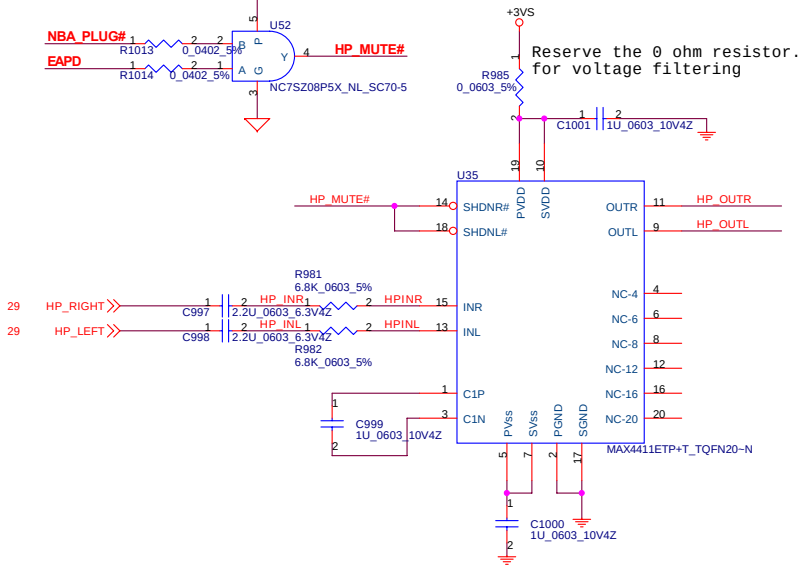


## EC Beep

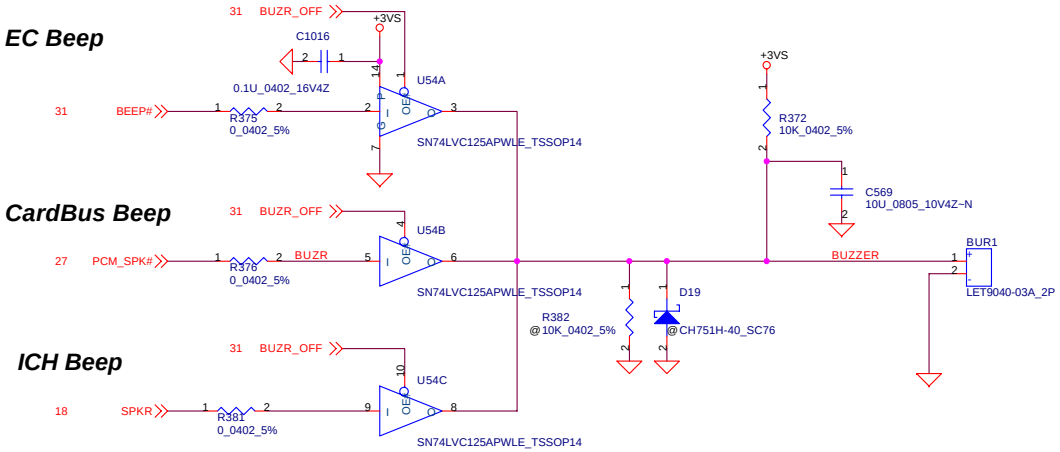


PROPRIETARY NOTE

THIS SHEET OF ENGINEERING DRAWING IS THE PROPRIETARY PROPERTY OF COMPAL ELECTRONICS, INC. AND CONTAINS CONFIDENTIAL AND TRADE SECRET INFORMATION. THIS SHEET MAY NOT BE TRANSFERRED FROM THE CUSTODY OF THE COMPETENT DIVISION OF R&D DEPARTMENT EXCEPT AS AUTHORIZED BY COMPAL ELECTRONICS, INC. NEITHER THIS SHEET NOR THE INFORMATION IT CONTAINS MAY BE USED BY OR DISCLOSED TO ANY THIRD PARTY WITHOUT PRIOR WRITTEN CONSENT OF COMPAL ELECTRONICS, INC.

Compal Electronics, Inc.
Title: SCHEMATIC, M/B LA-2641P
Size: Document Number: 401335 Rev B
Date: 星期三, 四月 13, 2005 Sheet 30 of 48

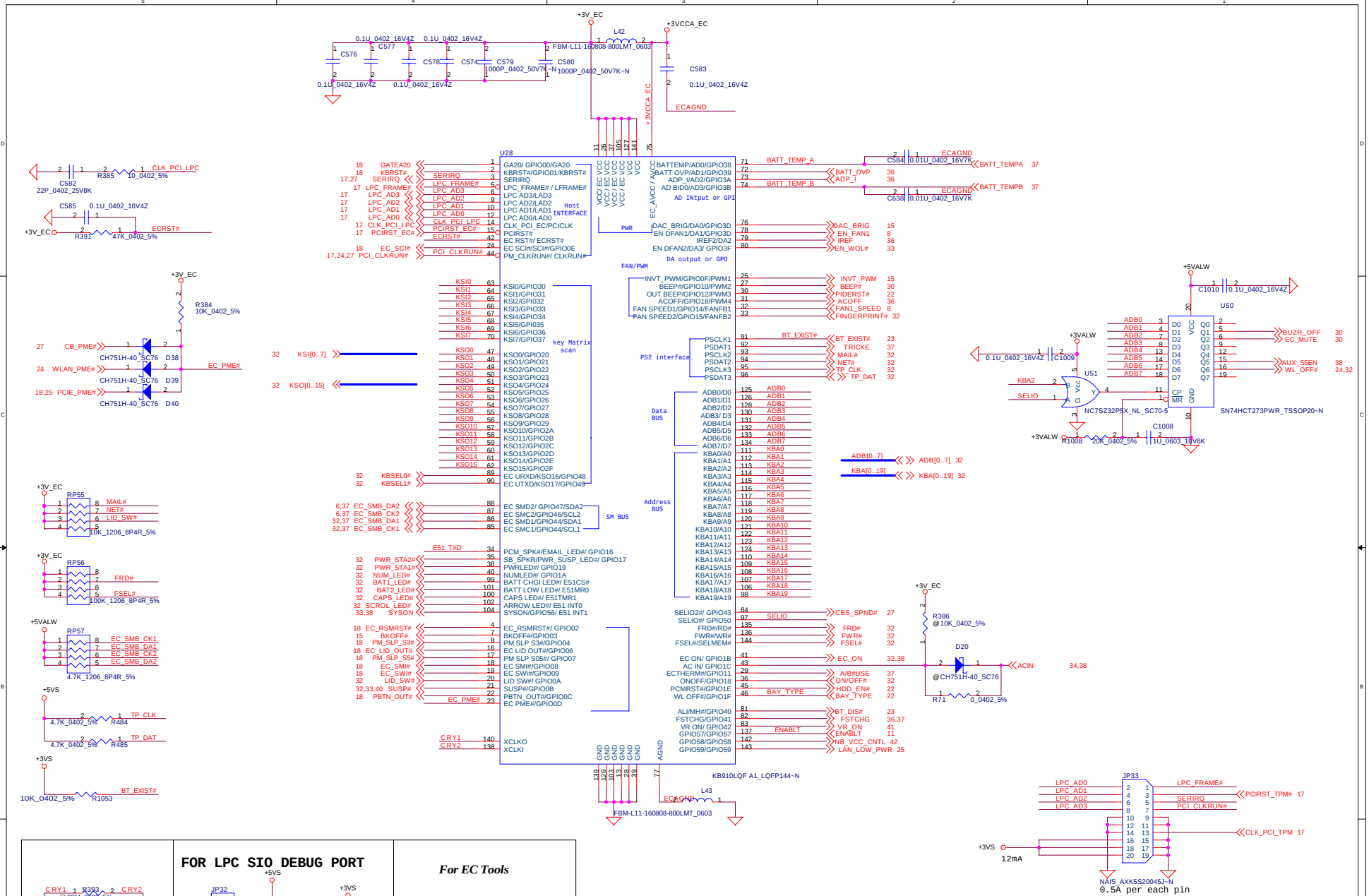


THIS SHEET OF ENGINEERING DRAWING IS THE PROPRIETARY PROPERTY OF COMPAL ELECTRONICS, INC. AND CONTAINS CONFIDENTIAL AND TRADE SECRET INFORMATION. THIS SHEET MAY NOT BE TRANSFERED FROM THE CUSTODY OF THE COMPETENT DIVISION OF R&D DEPARTMENT EXCEPT AS AUTHORIZED BY COMPAL ELECTRONICS, INC. NEITHER THIS SHEET NOR THE INFORMATION IT CONTAINS MAY BE USED BY OR DISCLOSED TO ANY THIRD PARTY WITHOUT PRIOR WRITTEN CONSENT OF COMPAL ELECTRONICS, INC.

**Compal Electronics, Inc.**

Title: **SCHEMATIC, M/B LA-2641P**

Size: | Document Number: **401335** | Rev: B

Date: 星期三, 四月 13, 2005 | Sheet 31 of 48

# 1MB Flash ROM

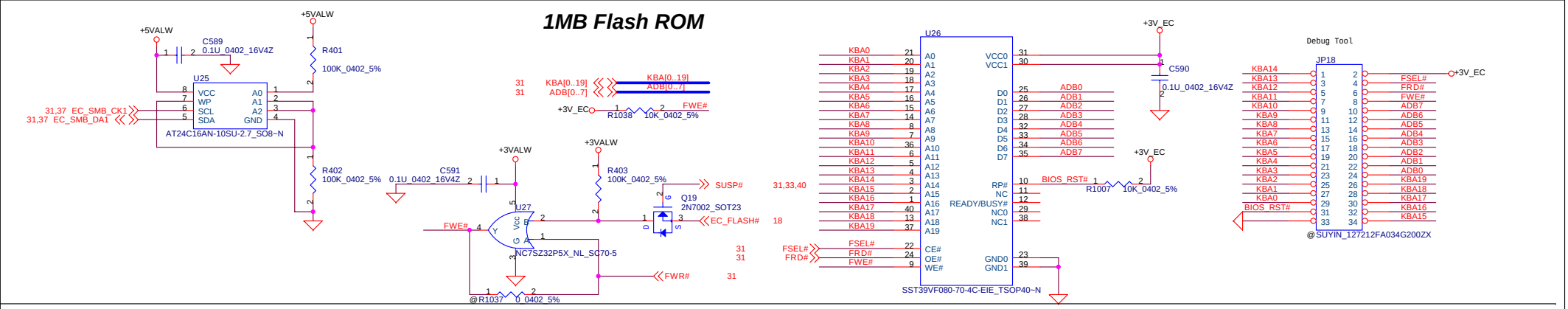


# KEYBOARD CONN.

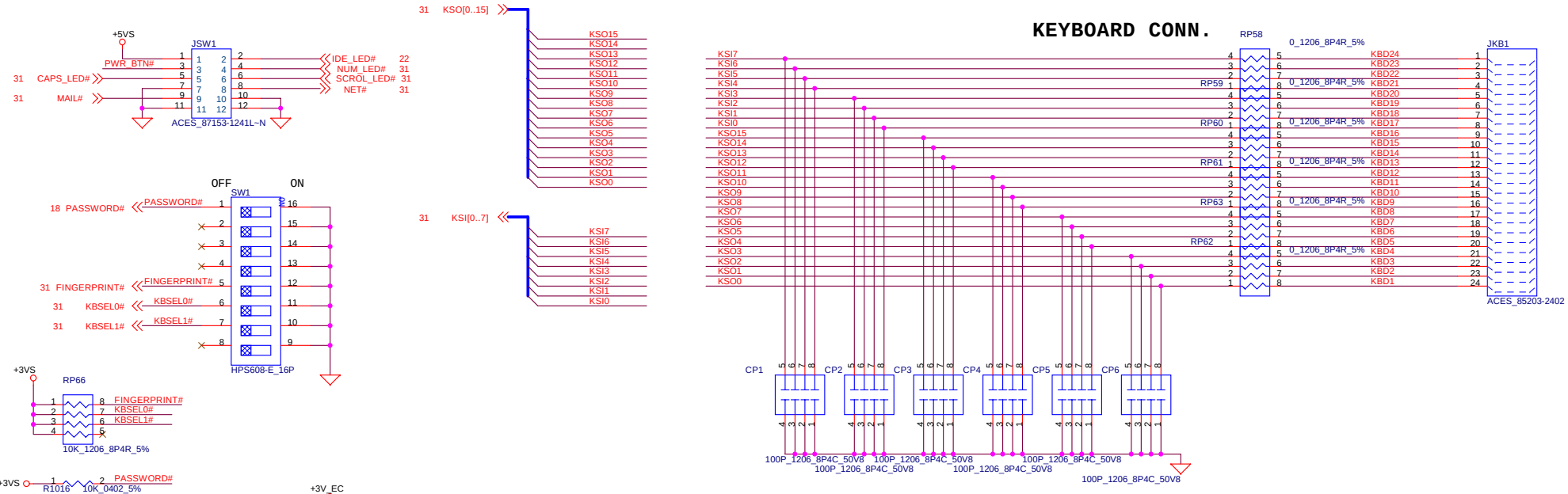


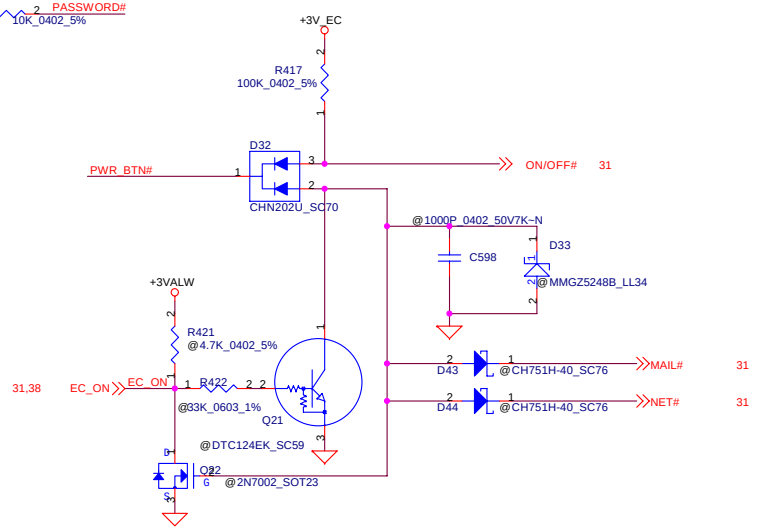


# Touch-Pad CONN.

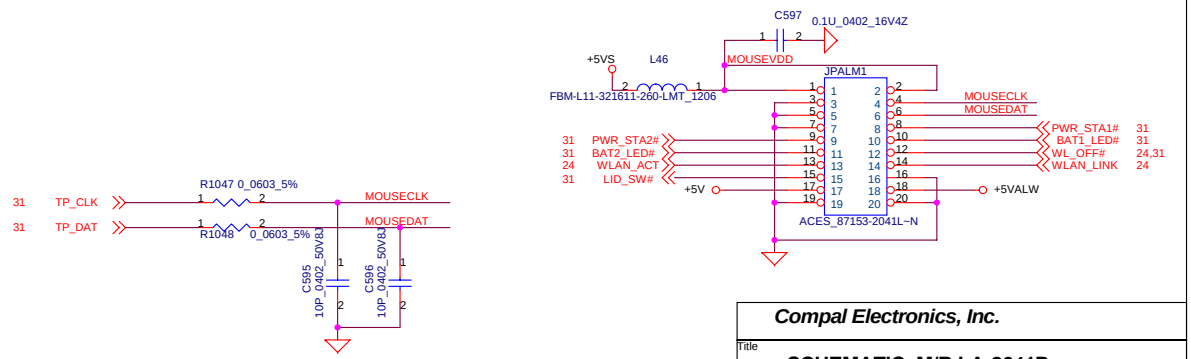


THIS SHEET OF ENGINEERING DRAWING IS THE PROPRIETARY PROPERTY OF COMPAL ELECTRONICS, INC. AND CONTAINS CONFIDENTIAL AND TRADE SECRET INFORMATION. THIS SHEET MAY NOT BE TRANSFERED FROM THE CUSTODY OF THE COMPETENT DIVISION OF R&D DEPARTMENT EXCEPT AS AUTHORIZED BY COMPAL ELECTRONICS, INC. NEITHER THIS SHEET NOR THE INFORMATION IT CONTAINS MAY BE USED BY OR DISCLOSED TO ANY THIRD PARTY WITHOUT PRIOR WRITTEN CONSENT OF COMPAL ELECTRONICS, INC.

**Compal Electronics, Inc.**

| | |
|---|---|
| Title | SCHEMATIC, M/B LA-2641P |
| Size | |
| Document Number | 401335 |
| Rev | B |
| Date: | 星期三, 四月 13, 2005 |
| Sheet | 32 of 48 |

## +1.8VALW TO +1.8VS

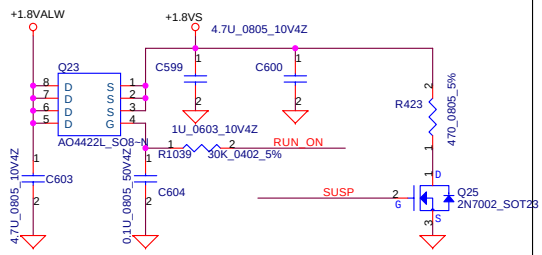


## +1.8VALW TO +1.8V

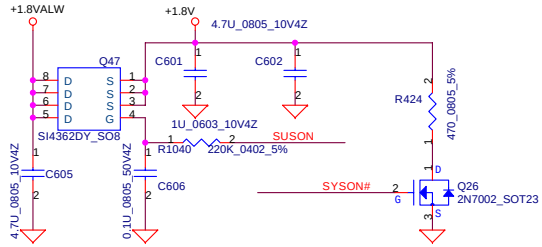


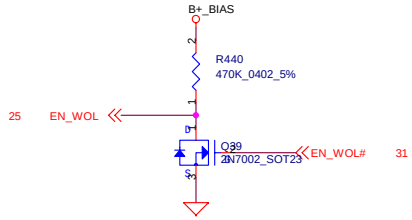


## +3VALW TO +3VS

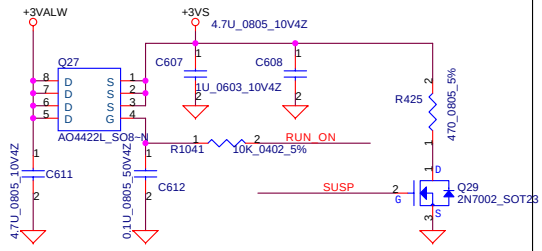


## +3VALW TO +3V

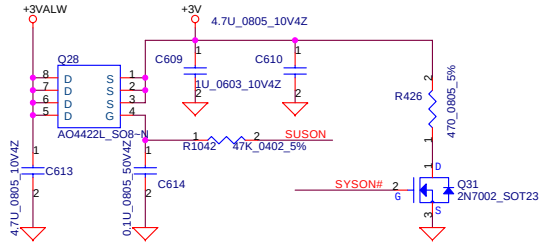


## +5VALW TO +5VS

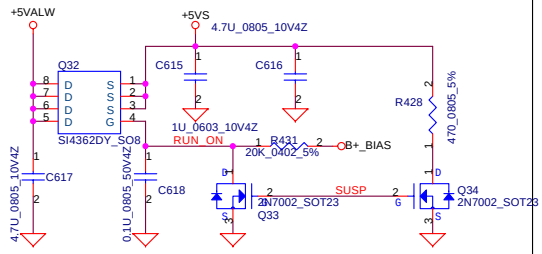


## +5VALW TO +5V

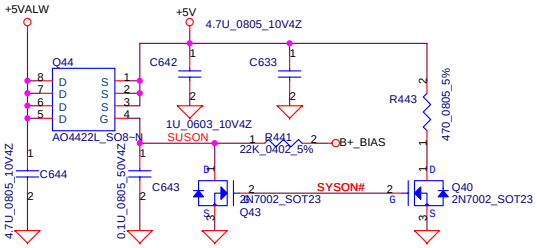


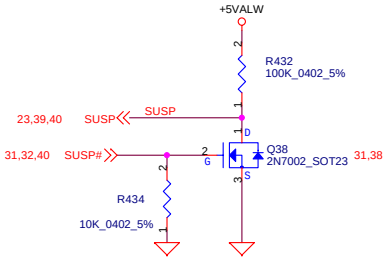


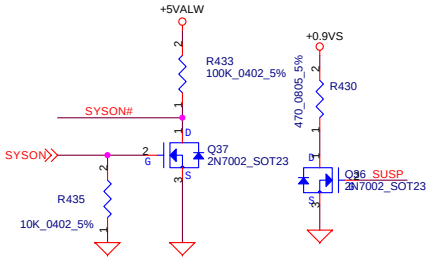


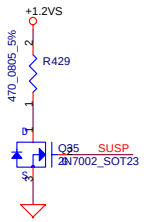


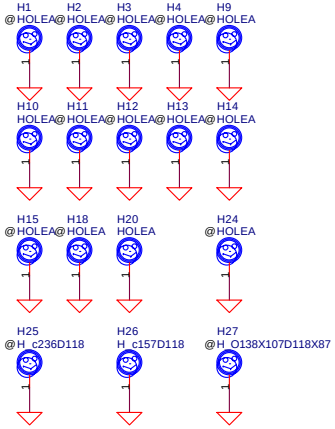


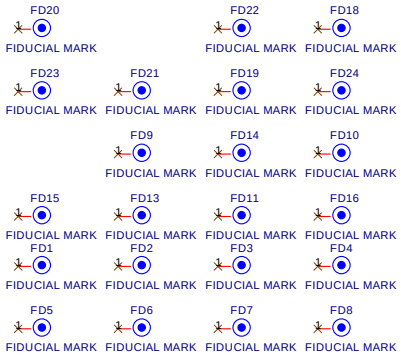


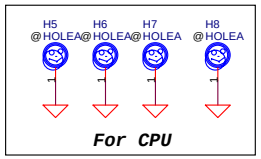


THIS SHEET OF ENGINEERING DRAWING IS THE PROPRIETARY PROPERTY OF COMPAL ELECTRONICS, INC. AND CONTAINS CONFIDENTIAL AND TRADE SECRET INFORMATION. THIS SHEET MAY NOT BE TRANSFERED FROM THE CUSTODY OF THE COMPETENT DIVISION OF R&D DEPARTMENT EXCEPT AS AUTHORIZED BY COMPAL ELECTRONICS, INC. NEITHER THIS SHEET NOR THE INFORMATION IT CONTAINS MAY BE USED BY OR DISCLOSED TO ANY THIRD PARTY WITHOUT PRIOR WRITTEN CONSENT OF COMPAL ELECTRONICS, INC.

**Compal Electronics, Inc.**

Title: **SCHEMATIC, M/B LA-2641P**

| Size | Document Number | Rev |
|---|---|---|
| | 401335 | B |

Date: 星期三, 四月 13, 2005 Sheet 33 of 48

# Detector

**Vin Detector Threshold:**

Low > High: 13.757V
High > Low: 13.160V

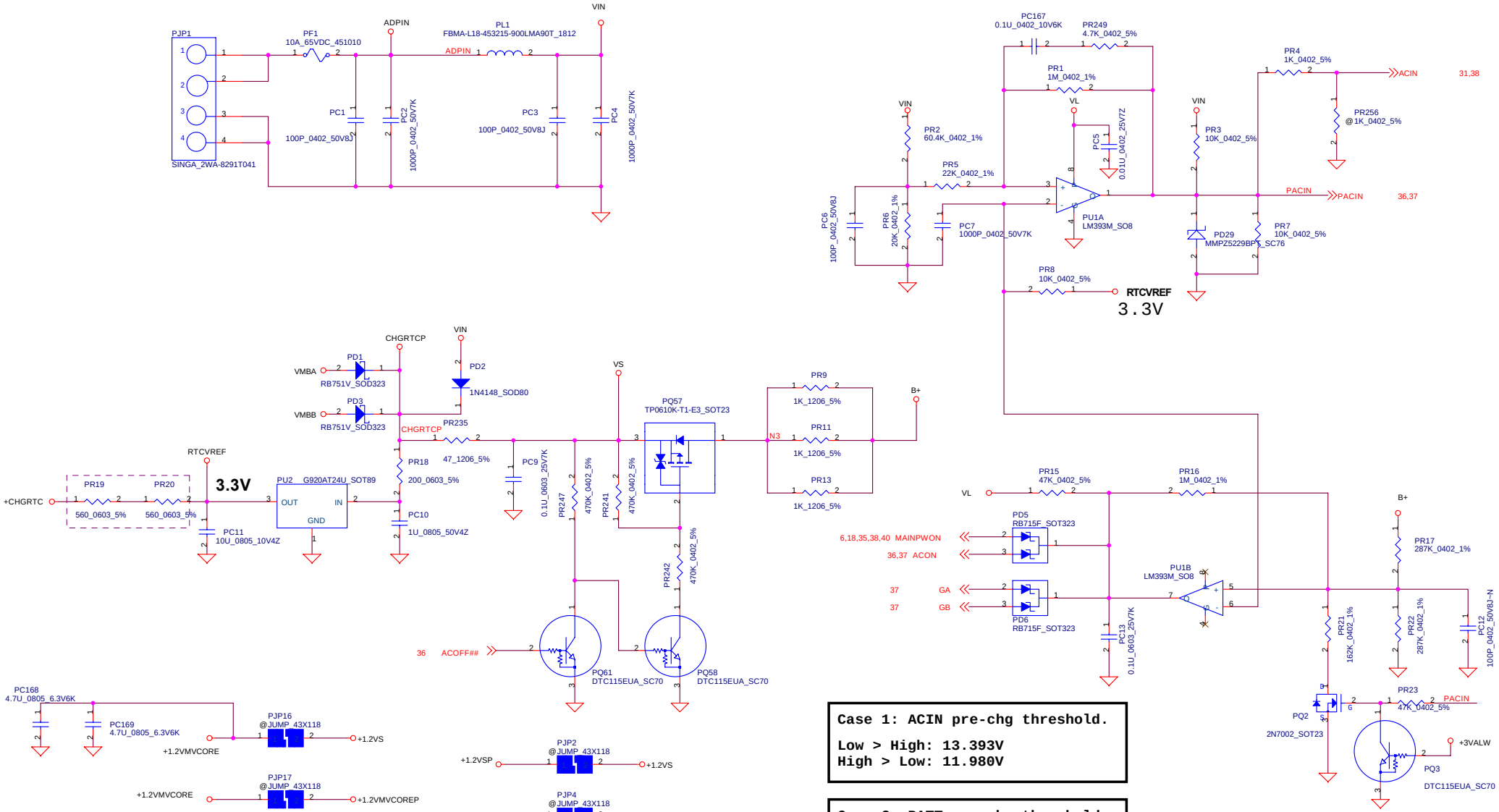


**Case 1: ACIN pre-chg threshold.**

Low > High: 13.393V
High > Low: 11.980V

**Case 2: BATT pre-chg threshold.**

Low > High: 7.547V
High > Low: 6.134V

THIS SHEET OF ENGINEERING DRAWING IS THE PROPRIETARY PROPERTY OF COMPAL ELECTRONICS, INC. AND CONTAINS CONFIDENTIAL AND TRADE SECRET INFORMATION. THIS SHEET MAY NOT BE TRANSFERED FROM THE CUSTODY OF THE COMPETENT DIVISION OF R&D DEPARTMENT EXCEPT AS AUTHORIZED BY COMPAL ELECTRONICS, INC. NEITHER THIS SHEET NOR THE INFORMATION IT CONTAINS MAY BE USED BY OR DISCLOSED TO ANY THIRD PARTY WITHOUT PRIOR WRITTEN CONSENT OF COMPAL ELECTRONICS, INC.

Compal Electronics, Inc.
Title: SCHEMATIC, M/B LA-2641P
Size: Document Number: 401335
Rev: B
Date: 星期三, 四月 13, 2005
Sheet 34 of 48

**PH1 under CPU botten side :**
CPU thermal protection at 86 +-3 degree C
Recovery at 51 +-3 degree C

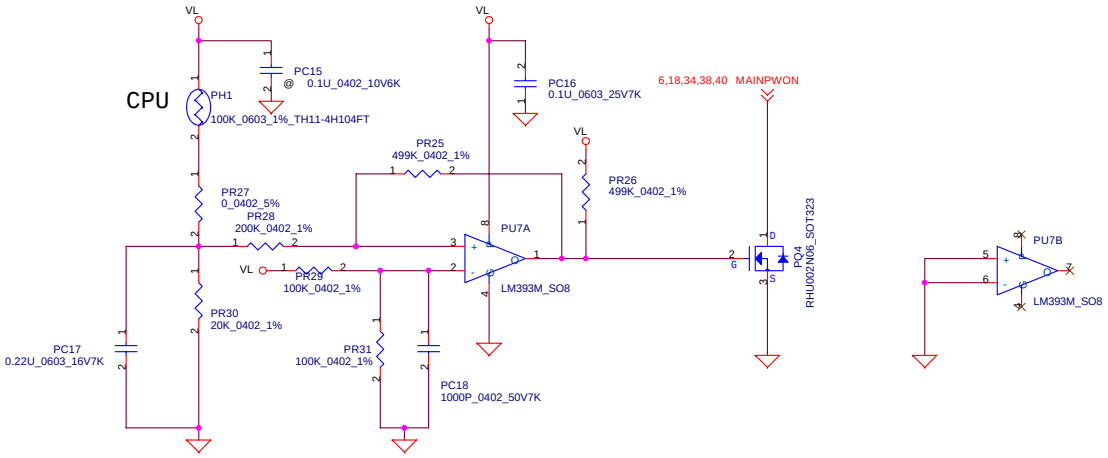


PROPRIETARY NOTE THIS SHEET OF ENGINEERING DRAWING IS THE PROPRIETARY PROPERTY OF COMPAL ELECTRONICS, INC. AND CONTAINS CONFIDENTIAL AND TRADE SECRET INFORMATION. THIS SHEET MAY NOT BE TRANSFERRED FROM THE CUSTODY OF THE COMPETENT DIVISION OF R&D DEPARTMENT EXCEPT AS AUTHORIZED BY COMPAL ELECTRONICS, INC. NEITHER THIS SHEET NOR THE INFORMATION IT CONTAINS MAY BE USED BY OR DISCLOSED TO ANY THIRD PARTY WITHOUT PRIOR WRITTEN CONSENT OF COMPAL ELECTRONICS, INC.

Compal Electronics, Inc.
Title: SCHEMATIC, M/B LA-2641P
Size: Custom
Document Number: 401335
Rev: B
Date: 星期三, 四月 13, 2005
Sheet 35 of 48

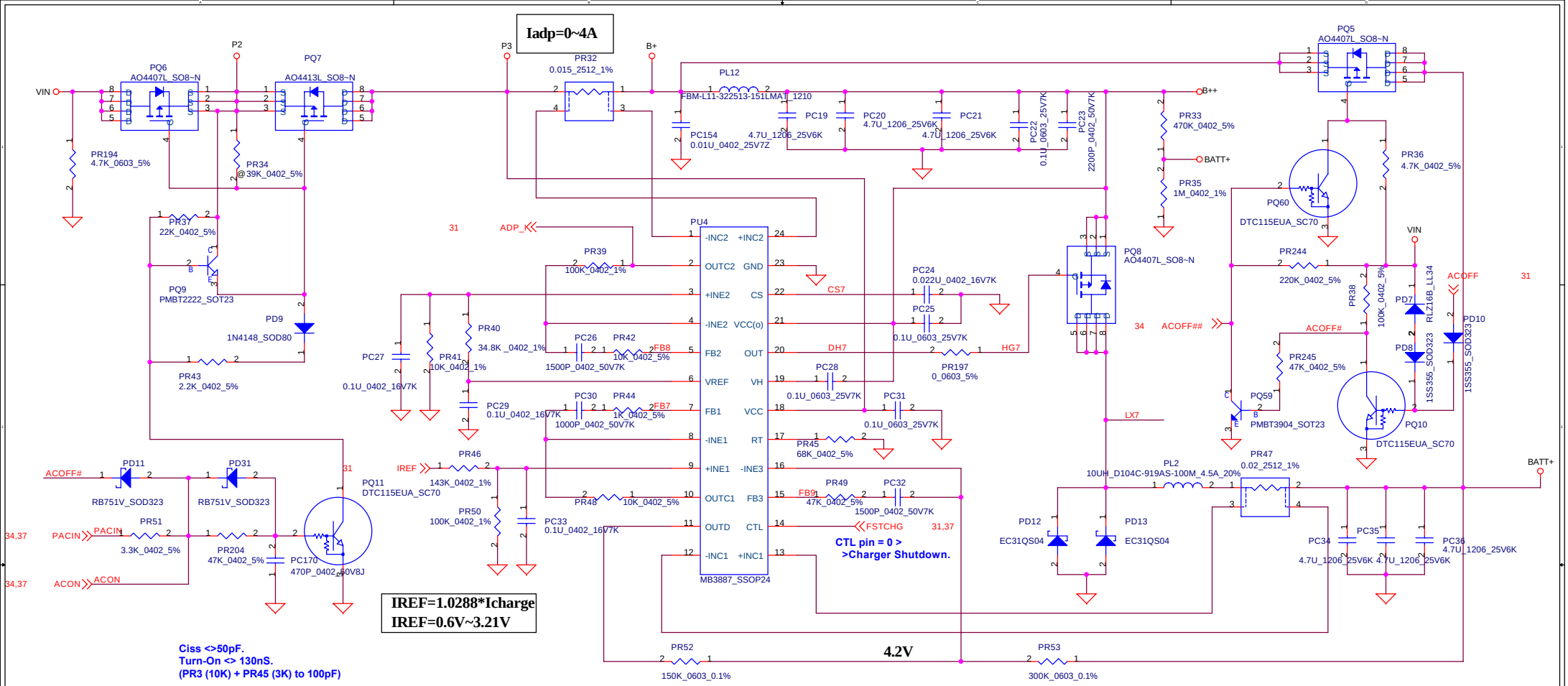


Vadp=15V

I limit: 3.72A

D.A.C.A. (C.P.) on 60W adaptor: Take PR41= 10K
4A*0.015*20 = 5*PR41/(PR41+PR40)<> PR40<>34.8KK

Fast charge current <> 3.3A,
3.3A*0.02*20/[(3.21V- 3.3A*0.02*20)/PR46] <> PR50
PR46 <> 143K

Trickle charge current <> 0.6A,
0.6A*0.02*20/[(0.6V- 0.6A*0.02*20)/PR46] <> PR50
PR46 <> 143K

OVP voltage : LI
3S2P : 13.5V--> BATT_OVP= 1.5V
(BAT_OVP=0.1112 *BATT+)

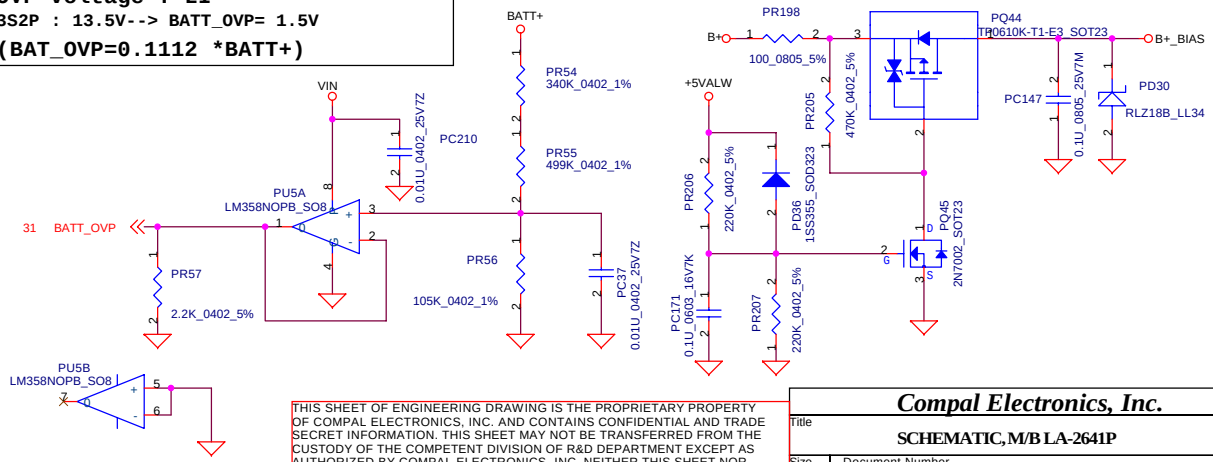


THIS SHEET OF ENGINEERING DRAWING IS THE PROPRIETARY PROPERTY OF COMPAL ELECTRONICS, INC. AND CONTAINS CONFIDENTIAL AND TRADE SECRET INFORMATION. THIS SHEET MAY NOT BE TRANSFERRED FROM THE CUSTODY OF THE COMPETENT DIVISION OF R&D DEPARTMENT EXCEPT AS AUTHORIZED BY COMPAL ELECTRONICS, INC. NEITHER THIS SHEET NOR THE INFORMATION IT CONTAINS MAY BE USED BY OR DISCLOSED TO ANY THIRD PARTY WITHOUT PRIOR WRITTEN CONSENT OF COMPAL ELECTRONICS, INC.

| | | |
|---|---|---|
| Compal Electronics, Inc. | | |
| Title: SCHEMATIC, M/B LA-2641P | | |
| Size | Document Number: 401335 | Rev: B |
| Date: 星期三, 四月 13, 2005 | Sheet 36 of 48 | |

# Battery Selector

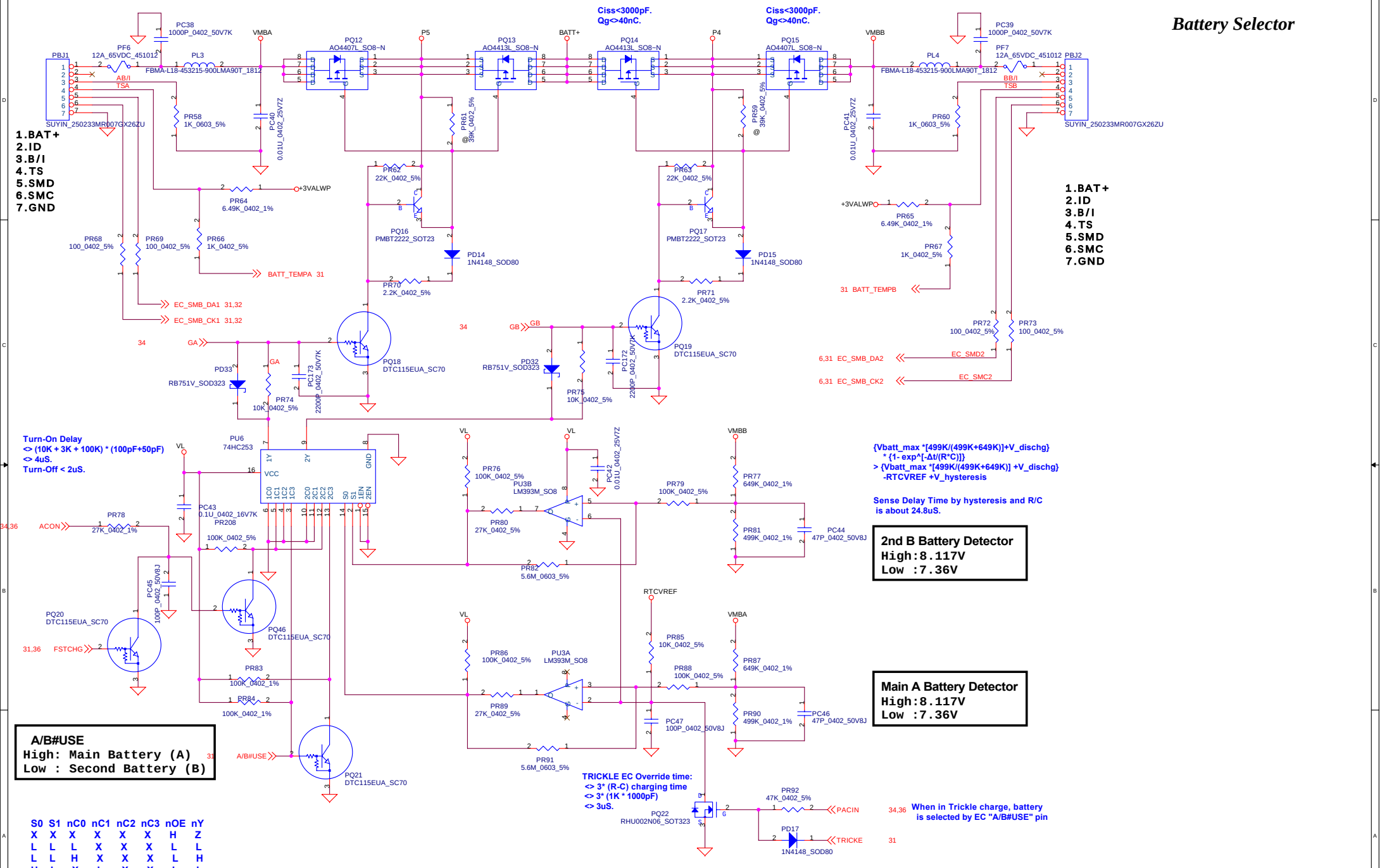


| S0 | S1 | nC0 | nC1 | nC2 | nC3 | nOE | nY |
|---|---|---|---|---|---|---|---|
| X | X | X | X | X | X | H | Z |
| L | L | L | X | X | X | L | L |
| L | L | H | X | X | X | L | H |
| H | L | X | L | X | X | L | L |
| H | L | X | H | X | X | L | H |
| L | H | X | X | L | X | L | L |
| L | H | X | X | H | X | L | H |
| H | H | X | X | X | L | L | L |
| H | H | X | X | X | H | L | H |

THIS SHEET OF ENGINEERING DRAWING IS THE PROPRIETARY PROPERTY OF COMPAL ELECTRONICS, INC. AND CONTAINS CONFIDENTIAL AND TRADE SECRET INFORMATION. THIS SHEET MAY NOT BE TRANSFERED FROM THE CUSTODY OF THE COMPETENT DIVISION OF R&D DEPARTMENT EXCEPT AS AUTHORIZED BY COMPAL ELECTRONICS, INC. NEITHER THIS SHEET NOR THE INFORMATION IT CONTAINS MAY BE USED BY OR DISCLOSED TO ANY THIRD PARTY WITHOUT PRIOR WRITTEN CONSENT OF COMPAL ELECTRONICS, INC.

**Compal Electronics, Inc.**

Title: SCHEMATIC, M/B LA-2641P

Size: Custom | Document Number: 401335 | Rev: B

Date: 星期二, 四月 13, 2005 | Sheet 37 of 48

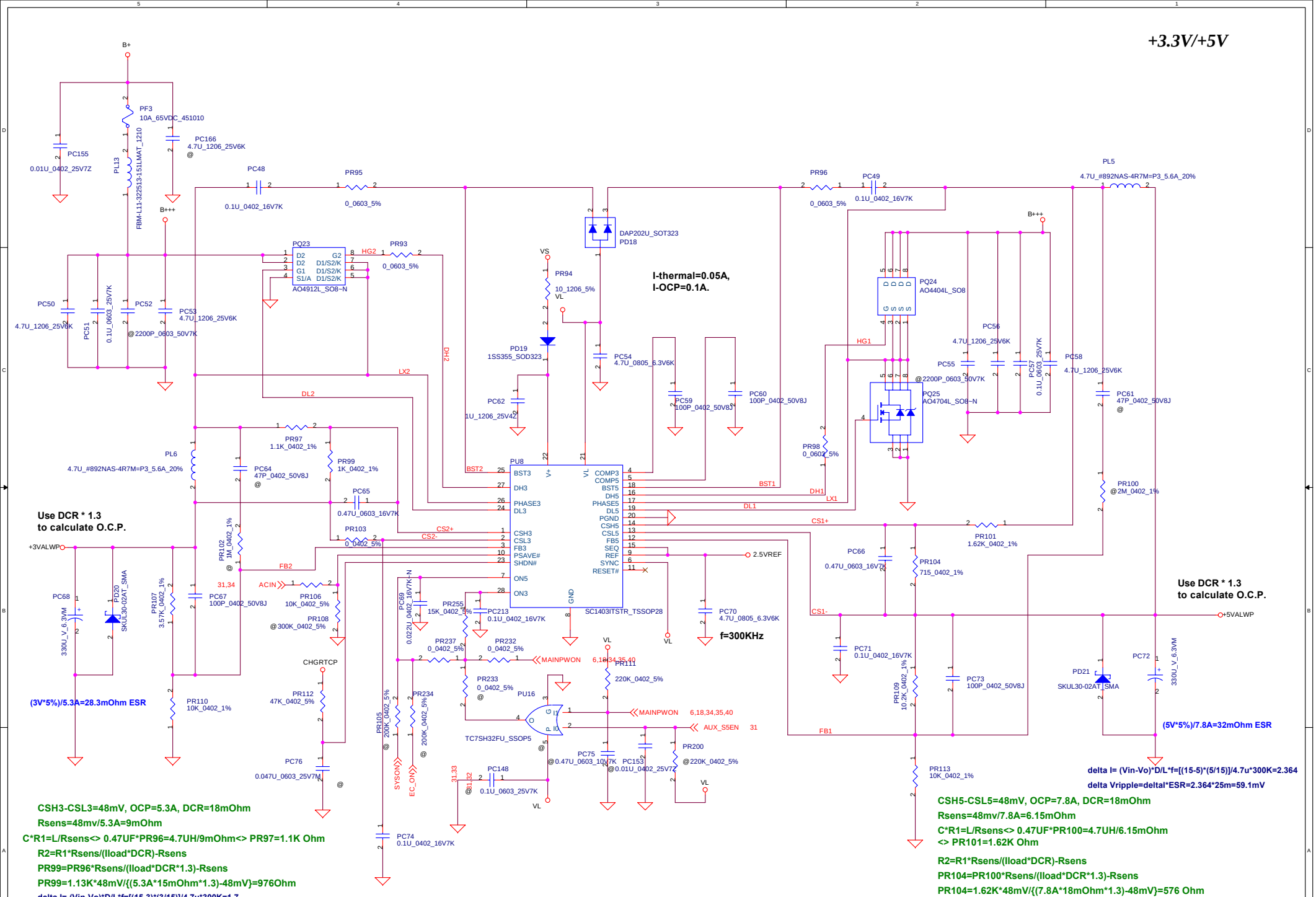


THIS SHEET OF ENGINEERING DRAWING IS THE PROPRIETARY PROPERTY OF COMPAL ELECTRONICS, INC. AND CONTAINS CONFIDENTIAL AND TRADE SECRET INFORMATION. THIS SHEET MAY NOT BE TRANSFERED FROM THE CUSTODY OF THE COMPETENT DIVISION OF R&D DEPARTMENT EXCEPT AS AUTHORIZED BY COMPAL ELECTRONICS, INC. NEITHER THIS SHEET NOR THE INFORMATION IT CONTAINS MAY BE USED BY OR DISCLOSED TO ANY THIRD PARTY WITHOUT PRIOR WRITTEN CONSENT OF COMPAL ELECTRONICS, INC.

**Compal Electronics, Inc.**

Title: SCHEMATIC, M/B LA-2641P

| Size | Document Number | Rev |
|---|---|---|
| | 401335 | B |

Date: 星期三, 四月 13, 2005 | Sheet 38 of 48

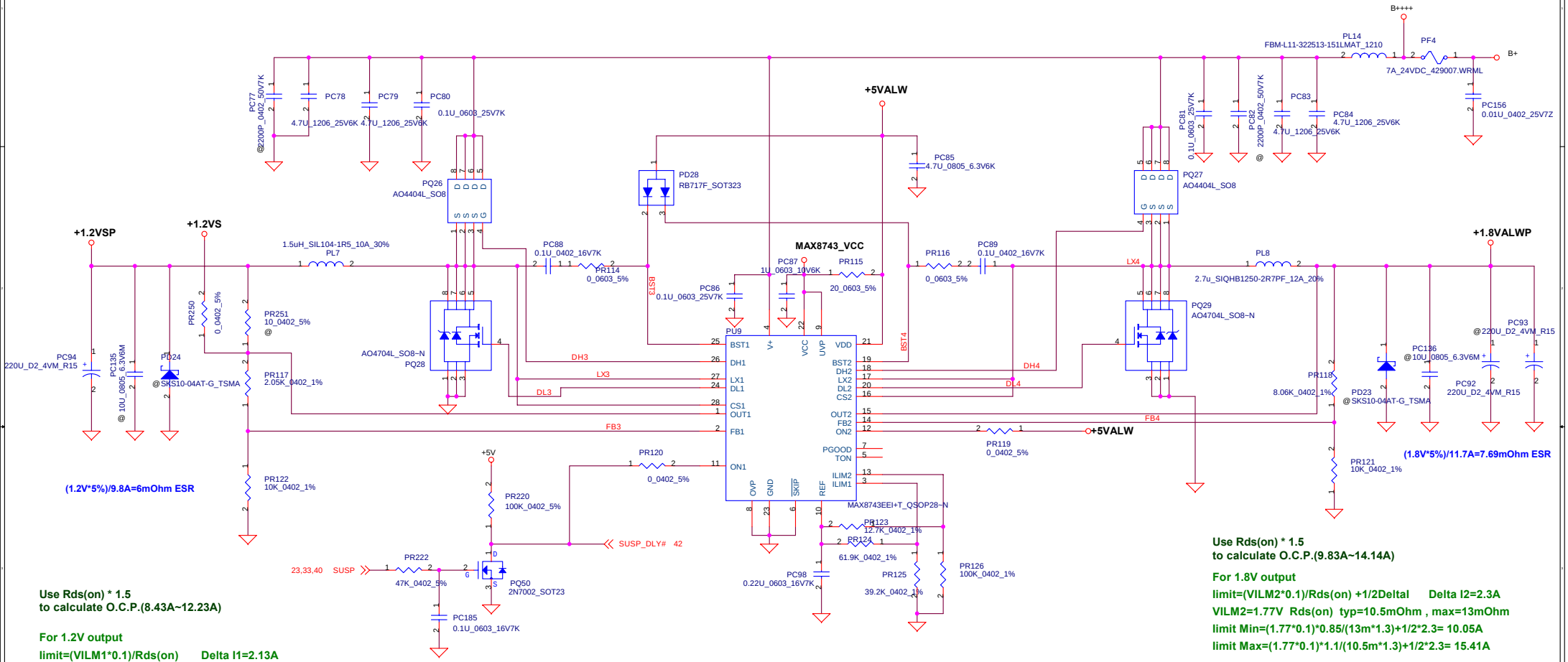


**Use Rds(on) * 1.5**
**to calculate O.C.P.(8.43A~12.23A)**

**For 1.2V output**

**limit=(VILM1*0.1)/Rds(on)  Delta I1=2.13A**

**VILM1=0.775V  Rds(on)  typ=10.3mOhm , max=13mOhm**

**limit Min=(0.775*0.1)*0.85/(13m*1.3)+1/2*2.13= 4.963A**

**limit Max=(0.775*0.1)*1.1/(13m*1.3)+1/2*2.13= 5.947A**

**delta Vripple=deltal*ESR=2.2*7.5m=16.5mV**

**Rds_Is=13mOhm , R125=39.2KOhm , VREF=2V,Iload=5.5A**

**delta I1=(Vin-Vo)*D/L*f=[(15-1.2)*(1.2/15)]/1.5u*345K=2.13A**

**[Iload-(0.5*delta I1)]*Rdson*1.5=VREF*[PR125/(PR124+PR125)]*0.1**

**[5.5-(0.5*2.13)]*13m*1.3=2*[39.2K/(PR124+39.2K)]*0.1**

**PR125=61.9K**

**Rds_Is=13mOhm , R126=100KOhm , VREF=2V,Iload=11.5A**

**delta I2=(Vin-Vo)*D/L*f=[(15-1.8)*(1.8/15)]/2.7u*255K=2.3A**

**[Iload-(0.5*delta I2)]*Rdson*1.5=VREF*[PR126/(PR123+PR126)]*0.1**

**[11.5-(0.5*2.3)]*13m*1.3=2*[100K/(PR123+100K)]*0.1**

**PR123<>12.7K**

**Use Rds(on) * 1.5**
**to calculate O.C.P.(9.83A~14.14A)**

**For 1.8V output**

**limit=(VILM2*0.1)/Rds(on) +1/2Deltal  Delta I2=2.3A**

**VILM2=1.77V  Rds(on)  typ=10.5mOhm , max=13mOhm**

**limit Min=(1.77*0.1)*0.85/(13m*1.3)+1/2*2.3= 10.05A**

**limit Max=(1.77*0.1)*1.1/(10.5m*1.3)+1/2*2.3= 15.41A**

**delta Vripple=deltal*ESR=3*7.5m=22.5mV**

THIS SHEET OF ENGINEERING DRAWING IS THE PROPRIETARY PROPERTY OF COMPAL ELECTRONICS, INC. AND CONTAINS CONFIDENTIAL AND TRADE SECRET INFORMATION. THIS SHEET MAY NOT BE TRANSFERED FROM THE CUSTODY OF THE COMPETENT DIVISION OF R&D DEPARTMENT EXCEPT AS AUTHORIZED BY COMPAL ELECTRONICS, INC. NEITHER THIS SHEET NOR THE INFORMATION IT CONTAINS MAY BE USED BY OR DISCLOSED TO ANY THIRD PARTY WITHOUT PRIOR WRITTEN CONSENT OF COMPAL ELECTRONICS, INC.

| | | | |
|---|---|---|---|
| Compal Electronics, Inc. | | | |
| Title: SCHEMATIC, M/B LA-2641P | | | |
| Size: B | Document Number: 401335 | | Rev: B |
| Date: 星期三, 四月 13, 2005 | Sheet 39 of 48 | | |

# 0.9VSP/VCCP

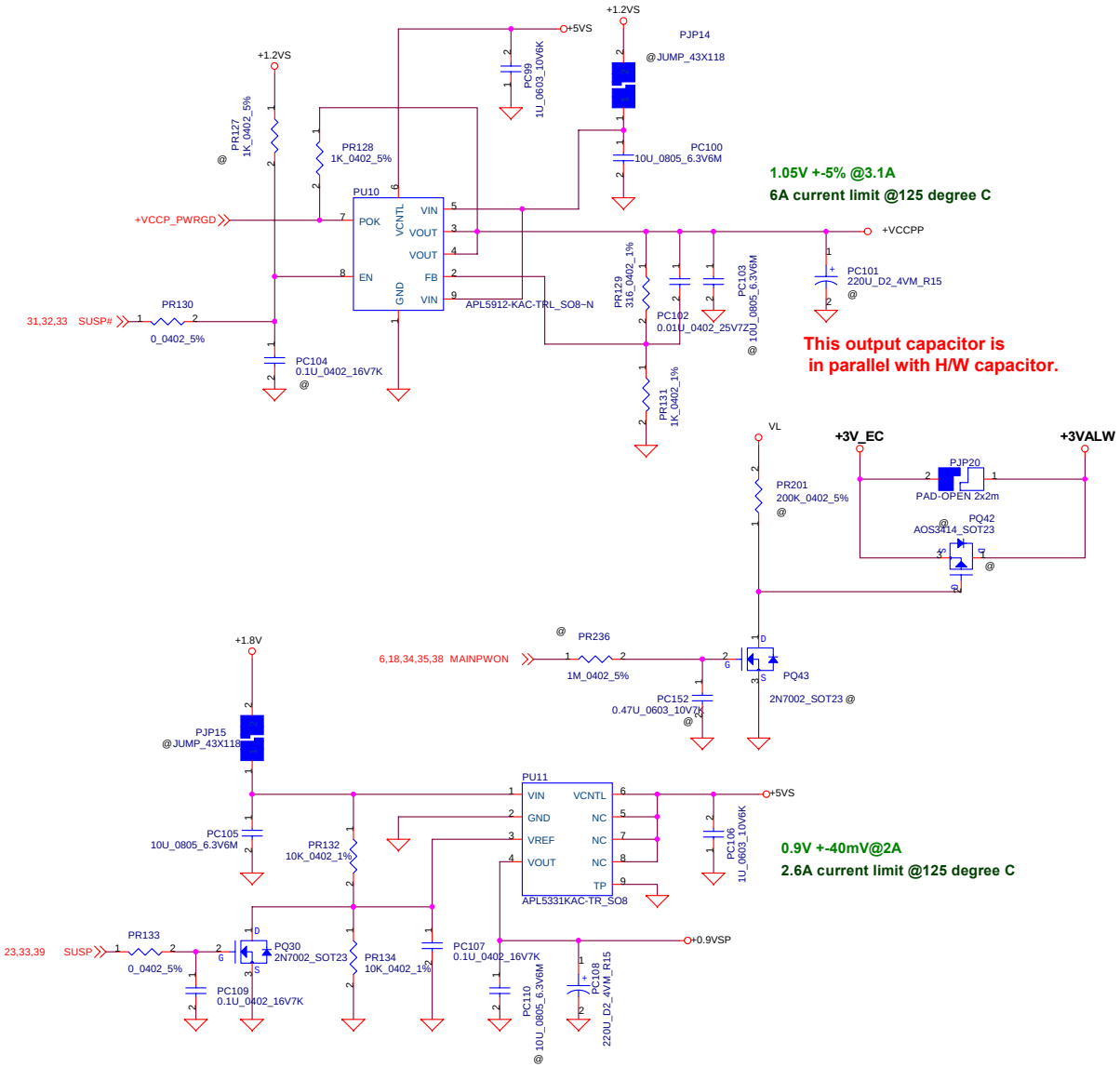


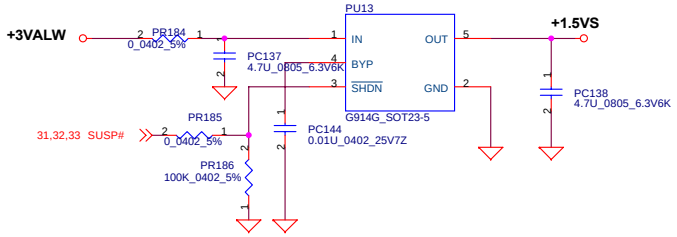


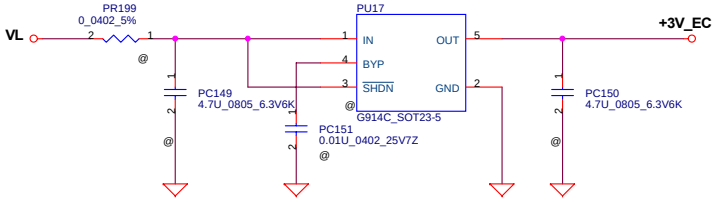


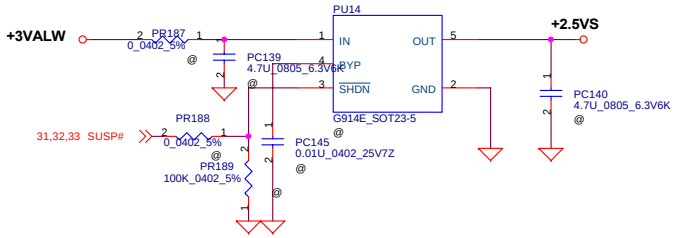


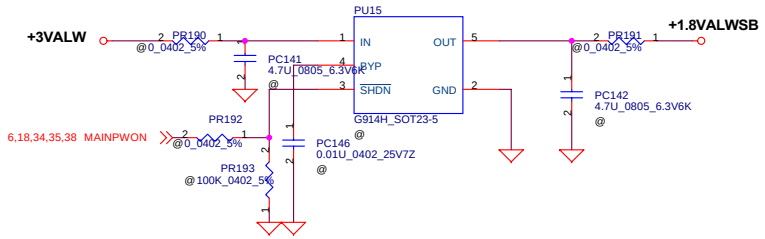


THIS SHEET OF ENGINEERING DRAWING IS THE PROPRIETARY PROPERTY OF COMPAL ELECTRONICS, INC. AND CONTAINS CONFIDENTIAL AND TRADE SECRET INFORMATION. THIS SHEET MAY NOT BE TRANSFERRED FROM THE CUSTODY OF THE COMPETENT DIVISION OF R&D DEPARTMENT EXCEPT AS AUTHORIZED BY COMPAL ELECTRONICS, INC. NEITHER THIS SHEET NOR THE INFORMATION IT CONTAINS MAY BE USED BY OR DISCLOSED TO ANY THIRD PARTY WITHOUT PRIOR WRITTEN CONSENT OF COMPAL ELECTRONICS, INC.

| | | |
|---|---|---|
| Compal Electronics, Inc. | | |
| Title: SCHEMATIC, M/B LA-2641P | | |
| Size: Custom | Document Number: 401335 | Rev: B |
| Date: 星期三, 四月 13, 2005 | Sheet 40 of 48 | |

# CPU CORE

delta I= (Vin-Vo)*D/L*f=[(15-1.308)*(1.308/15)]/(.56u*300K)=7.1A

OCP=41A(TYP), DCR=1.4mOhm

Ilimit(min) per phase=41/2-7.1/2=16.95A

16.95A*1.4mOHM(DCR)*1.3(temperature factor)*20=VLLIM(TYP)=0.61698V

Take PR156=200K, PR158=90.9K

VILIM=VREF*PR158/(PR158+PR156)=0.625(TYP)

VILIM/20=Ilimit*DCR*1.3

OCP(TYP)=(0.625/20/1.3/1.4mOHM+delta I/2)*2=41A

OCP(min)=((0.625/20-2mV)/1.3/1.4mOHM+delta I/2)*2=38.83A

OCP(max)=((0.625/20+2mV)/1.3/1.4mOHM+delta I/2)*2=43.23A

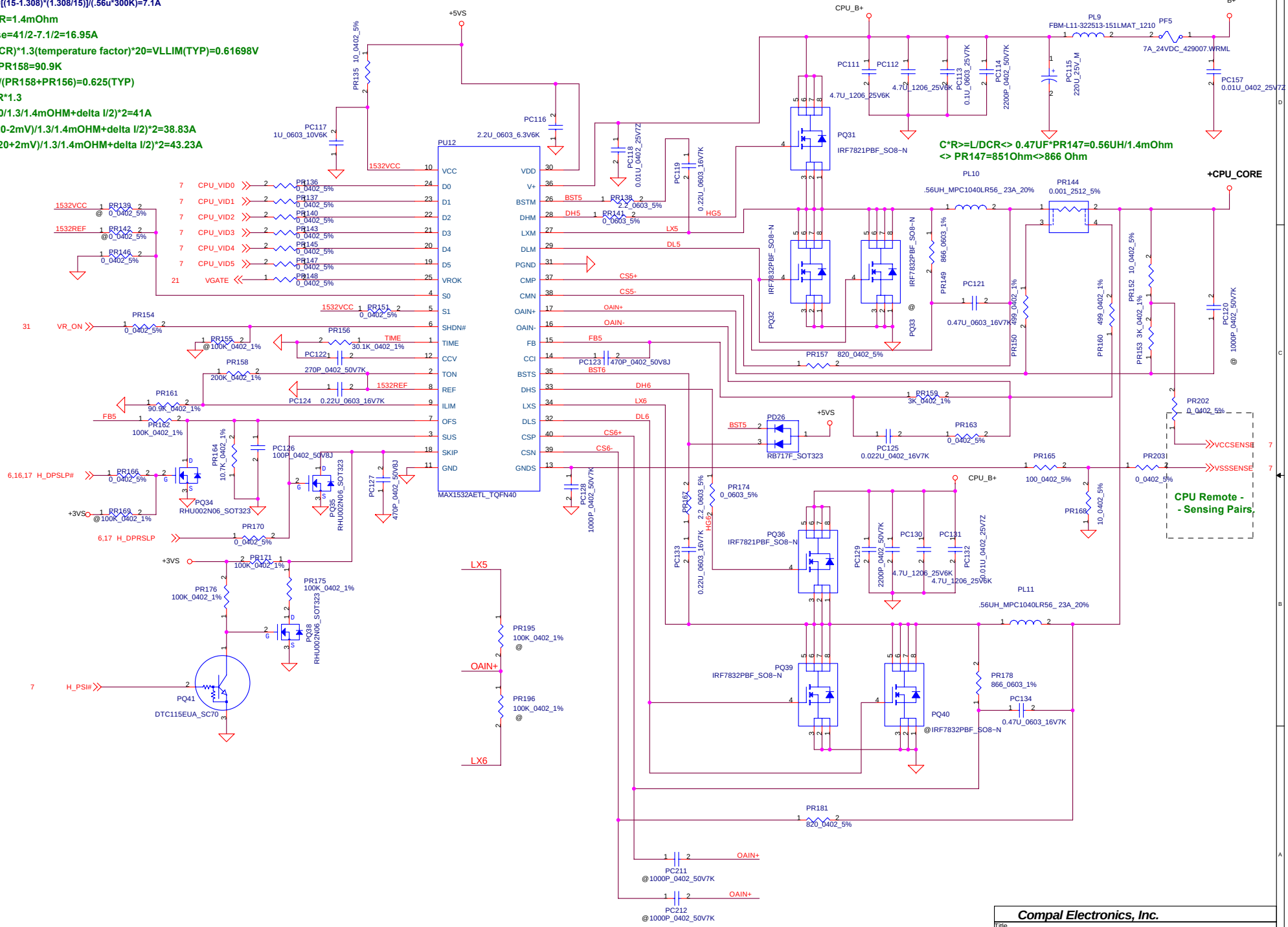


THIS SHEET OF ENGINEERING DRAWING IS THE PROPRIETARY PROPERTY OF COMPAL ELECTRONICS, INC. AND CONTAINS CONFIDENTIAL AND TRADE SECRET INFORMATION. THIS SHEET MAY NOT BE TRANSFERED FROM THE CUSTODY OF THE COMPETENT DIVISION OF R&D DEPARTMENT EXCEPT AS AUTHORIZED BY COMPAL ELECTRONICS, INC. NEITHER THIS SHEET NOR THE INFORMATION IT CONTAINS MAY BE USED BY OR DISCLOSED TO ANY THIRD PARTY WITHOUT PRIOR WRITTEN CONSENT OF COMPAL ELECTRONICS, INC.

| | |
|---|---|
| Compal Electronics, Inc. | |
| Title | SCHEMATIC, M/B LA-2641P |
| Size: Custom | Document Number: 401335 |
| Rev | B |
| Date: 星期三, 四月 13, 2005 | Sheet 41 of 48 |

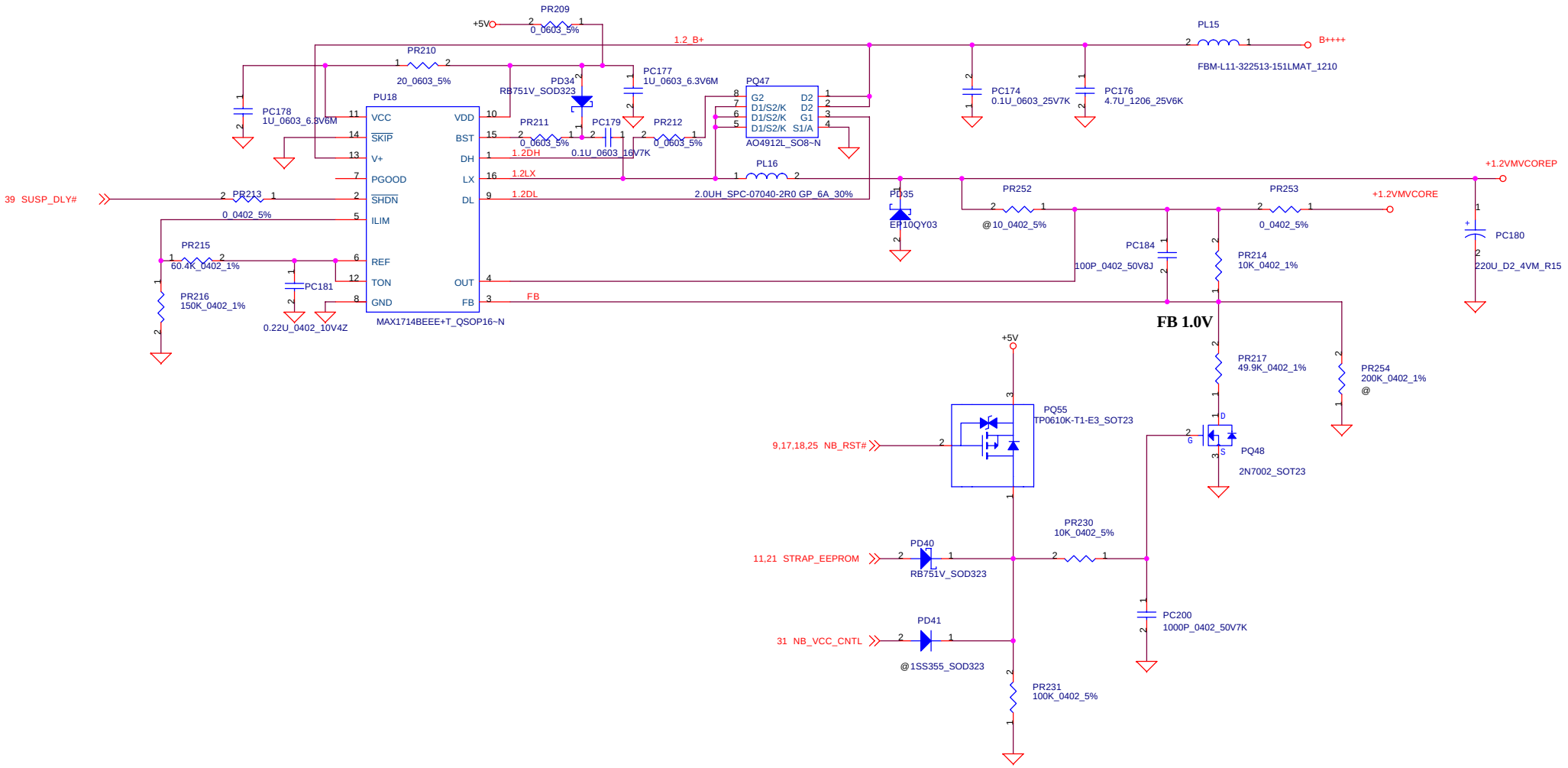


THIS SHEET OF ENGINEERING DRAWING IS THE PROPRIETARY PROPERTY OF COMPAL ELECTRONICS, INC. AND CONTAINS CONFIDENTIAL AND TRADE SECRET INFORMATION. THIS SHEET MAY NOT BE TRANSFERRED FROM THE CUSTODY OF THE COMPETENT DIVISION OF R&D DEPARTMENT EXCEPT AS AUTHORIZED BY COMPAL ELECTRONICS, INC. NEITHER THIS SHEET NOR THE INFORMATION IT CONTAINS MAY BE USED BY OR DISCLOSED TO ANY THIRD PARTY WITHOUT PRIOR WRITTEN CONSENT OF COMPAL ELECTRONICS, INC.

**Compal Electronics, Inc.**

| | |
|---|---|
| Title | SCHEMATIC, M/B LA-2641P |
| Size B | Document Number 401335 |
| Rev | B |
| Date: 星期三, 四月 13, 2005 | Sheet 42 of 48 |

# Version Change List ( P. I. R. List ) Page 1/3

| Item | Page# | Title | Date | Request Owner | Issue Description | Solution Description | Rev. |
|---|---|---|---|---|---|---|---|
| 1 | 6 | Pentium-M(1/3) | Nov. 19th | Compal | Correct circuit. | Add R1031 | 0.2 |
| 2 | 9, 17, 25 | RS400MD-FSB/A-PCIE(1/4)<br>SB400-PCIE/PCI/LPC/RTC(1/4)<br>BCM5751M-GLAN | Nov. 19th | Compal | Correct net name | Easy to identify net connection between RS400MD and SB400/BCM5751M | 0.2 |
| 3 | 8 | CPU Decoupling/FAN(3/3) | Nov. 19th | Compal | U2.1 and U2.3 is short togather. | Correct net name of U2.3 | 0.2 |
| 4 | 21 | Hardware Trap | Nov. 19th | Compal | Fix it to follow SB400 A31 request | Change the status of PCI_CLK2 to low | 0.2 |
| 5 | 24 | MINI_PCI SLOT-WLAN | Nov. 19th | Compal | Follow Compal standard design | Change the IRQ routing to IRQF# and IRQG# | 0.2 |
| 6 | 18 | P18-SB400-USB/AC97/MISC.(2/4) | Nov. 19th | Compal | Different power plane maybe cause some leakage. | Correct Power plane from +3valw to +3v to match USB_PHY_1.8v plane | 0.2 |
| 7 | 25 | BCM5751M-GLAN | Nov. 19th | Compal | For Debug | Reserve Pull-up R1030. | 0.2 |
| 8 | 31 | ENE-KB910L/TPM | Nov. 19th | Compal | Fix S5 boot function and sequence | Correct AUXS5_EN# and VGATE and VGATE_EC control type | 0.2 |
| 9 | 32 | BIOS/EE-Prom/TP/KB/SW | Nov. 19th | Compal | Re-assignt K/B ESD cap | Deleted C592. | 0.2 |
| 10 | 33 | DC TO DC | Nov. 22th | Compal | Follow M/E requirement | Deleted H16, H17, H23 | 0.2 |
| 11 | 11 | RS400MD-DISPLAY(3/4) | Nov. 22th | Compal | LCD Backlight can't function. | Change the control signal from BLEN" U3.D7" to BLON" U3.A6. | 0.2 |
| 12 | 22 | IDE/CD_ROM Conn. | Nov. 22th | Compal | correct the Poly-fuse spec for HDD requirement. | Change the Poly-fuse from 1.1A to 1.8A | 0.2 |
| 13 | 25<br>31 | BCM5751M-GLAN<br>ENE-KB910L/TPM | Nov. 22th | Compal | Reserved GPIO of KB910L for other function | Change the GLAN restet timing by A_RST# signal. | 0.2 |
| 14 | 29 | AC97 Codec AD1981B/MDC | Nov. 24th | Compal | MDC be changed. | Correct pin definition | 0.2 |
| 15 | 16 | ClockGen ICS951413 | Nov. 24th | Compal | ICS951411 will function fail with CPU Speedstep | Change Clock Gen from ICS951411 to ICS951413 | 0.2 |
| 16 | | RS400MD & SB400 | Nov. 24th | Compal | For Lead-free process | Change RS400MD & SB400 to Lead-Free part. | 0.2 |
| 17 | 30 | AMP./Audio Jack | Nov. 24th | Compal | To smooth the Cable routing | Swap Left and Right sound signals.--JSPK1 | 0.2 |
| 18 | 31 | ENE-KB910L/TPM | Nov. 24th | Compal | Separate TPM to Module type | Removed TPM Chip and add JP23 | 0.2 |
| 19 | 23 | USB/BlueTooth/FP | Nov. 25th | Compal | Bluetooth be changed | Correct connector" JP10" pin define and type. | 0.2 |
| 20 | 32 | BIOS/EE-Prom/TP/KB/SW | Nov. 25th | Compal | For M/E Requirement | Change the connecotr type" JPALM1" from Cable to FFC. | 0.2 |
| 21 | 11 | RS400MD-DISPLAY(3/4) | Nov. 25th | Compal | Reserved EEPROM" U49" debugging | Delete reserved circuit for PP phase | 0.2 |
| 22 | 11 | RS400MD-DISPLAY(3/4) | Nov. 25th | Compal | Reserved R508 for debugging | Delete R508 for PP phase | 0.2 |
| 23 | 15 | TV-OUT/LVDS/CRT | Nov. 25th | Compal | Reservd Resistors for LCD EDID | Update the R87, R88, R506, R507, R504 and R505 status for PP phase.<br>Delete R1032 and R1049 at page 11 | 0.2 |
| 24 | | | Nov. 25th | Compal | Reserved for PWR consumption measurement. | Delete R63, R189, JOPEN2, JOPEN3 and JOPEN4. | 0.2 |
| 25 | 30 | AMP./Audio Jack | Nov. 25th | Compal | Beep function fail | Correct Beep circuit | 0.2 |
| 26 | 15 | TV-OUT/LVDS/CRT | Nov. 25th | Compal | Lack of this part in vendor side | Change C907 from 0.1U_0402_25V4K to 0.1U_0805_50V. | 0.2 |

THIS SHEET OF ENGINEERING DRAWING IS THE PROPRIETARY PROPERTY OF COMPAL ELECTRONICS, INC. AND CONTAINS CONFIDENTIAL AND TRADE SECRET INFORMATION. THIS SHEET MAY NOT BE TRANSFERED FROM THE CUSTODY OF THE COMPETENT DIVISION OF R&D DEPARTMENT EXCEPT AS AUTHORIZED BY COMPAL ELECTRONICS, INC. NEITHER THIS SHEET NOR THE INFORMATION IT CONTAINS MAY BE USED BY OR DISCLOSED TO ANY THIRD PARTY WITHOUT PRIOR WRITTEN CONSENT OF COMPAL ELECTRONICS, INC.

# Version Change List ( P. I. R. List ) Page 2/3

| Item | Page# | Title | Date | Request Owner | Issue Description | Solution Description | Rev. |
|---|---|---|---|---|---|---|---|
| 27 | 22 | IDE/CD_ROM Conn. | Nov. 30th | NEC | For safety | Add F4" Fuse" for ODD | 0.2 |
| 28 | 15 | TV-OUT/LVDS/CRT | Dec. 1st | Compal | CRT Function abnormal | Change the D12 to correct library | 0.2 |
| 29 | 23 | USB/BlueTooth/FP | Dec. 6th | NEC | For Safety. | Add Poly-Fuse for B/T and F/P. | 0.2 |
| 30 | 30 | AMP./Audio Jack | Dec. 6th | Compal | Correct Buzzer drive circuit | Remove serial Resistors, Capacitor and Transtor. Change to Buffer to separate the signals and improve the driveing capacity. | 0.2 |
| 31 | 6 | Pentium-M(1/3) | Dec. 7th | Compal | Correct Thermal trip timing | Change R27 from 47k to 100k and fine-tune pwr sequnse between +1.5vs and VCCP. | 0.2 |
| 32 | | | Dec. 8th | EMI | PCI Clock will cause EMI issue. | Add AC-termination 10-ohm and 22pf for PCI Clocks. | 0.2 |
| 33 | 30 | AMP./Audio Jack | Dec. 8th | Compal | 1. Follow Buzzer voltage range' 2V ~ 4V' requirement<br>2. Follow NEC Audio team test result for HP signals. | 1. Change the pull-up power to +3VS.<br>2. Change R1005 & R1006 from 0-ohm to 47-ohm | 0.2 |
| 34 | 31 | ENE-KB910L/TPM | Dec. 8th | Compal | Correct Extension IO control signal. | Change the control signal of U51A from KBA1 to KBA2 | 0.2 |
| 35 | 29 | AC97 Codec AD1981B/MDC | Dec. 8th | EMI | EAPD will cause EMI issue with 197MHz | Change Resistor' R494' to Bead' L56' | 0.2 |
| 36 | 23 | USB/BlueTooth/FP | Dec. 9th | EMI | USB EMI problem | Add Common Choke for USB port | 0.2 |
| 37 | 22 | IDE/CD_ROM Conn. | Dec. 9th | EMI | Pin A24 ~ A26 will over 10dB for EMI | Add bypass capacitors' 1000p. | 0.2 |
| 38 | 15 | TV-OUT/LVDS/CRT | Dec. 10th | EMI | Reserved R to measure pwr consumption | Delete R488. | 0.2 |
| 39 | 22 | IDE/CD_ROM Conn. | Dec. 13th | NEC | For ODD Module Safety | Correct the Fuse with 3A for ODD | 0.2 |
| 40 | 31 | ENE-KB910L/TPM | Dec. 13th | Compal | For Power Play function | Reserved NB_VCC_CNTL for Power Play circuit. | 0.2 |
| 41 | 22<br>33 | IDE/CD_ROM Conn.<br>DC TO DC | Dec. 13th | Compal | Correct cap power rating for B+_BIAS | Change cap from 0.1u_0402_16V to 0.1u_0805_50V. | 0.2 |
| 42 | 18 | P18-SB400-USB/AC97/MISC.(2/4) | Dec. 13th | Compal | Prevent leakage currect for EC_SI# and EC_SCI# signals. | Change these signals pull-up from +3V to +3VLAW. | 0.2 |
| 43 | 32 | BIOS/EE-Prom/TP/KB/SW | Dec. 30th | Compal | Update the Battery mode power-on circuit. | Un-pop. R422, R421, Q22, Q21, D33, D43, D44 and C598. | 0.3 |
| 45 | 6 | Pentium-M(1/3) | Jan. 11th | Compal | Improve thermal trip timing. | Change R32 from 75 to 10-ohm. | 0.3 |
| 46 | 31 | ENE-KB910L/TPM | Jan. 11th | Compal | Correct Extension buffer function | Swap AUX_S5EN and TRICKE signal.<br>Move HDD_EN# from extension buffer, U50, to KB910L.<br>Move A/B#USE signal to KB910L and delted EC_THERM. | 0.3 |
| 47 | 31 | ENE-KB910L/TPM | Jan. 12th | Compal | To save space and cost. | Change U51 from SN74LVC32APWR TSSOP14 to NC7SZ32P5X_NL SC70-5. | 0.3 |
| 48 | 30 | AMP./Audio Jack | Jan. 13th | Compal | To solve Int. Speaker GAIN issue. | Change the POWER source of R360 & R359 from +5VAMP to +5VS.<br>+5VAMP is single Power plane. | 0.3 |
| 49 | 24 | MINI_PCI SLOT-WLAN | Jan. 13th | Compal | Correct net name for WL_OFF# signal. | Change the pull-up R, R1021, from D18.1 to D18.2.<br>Correct the net name for WL_OFF# to prevent confuse. | 0.3 |
| 50 | 32 | BIOS/EE-Prom/TP/KB/SW | Jan. 14th | Compal | Follow NEC DPD R02 for DIP SW function | Remove USBSEL and CONFIG signals. | 0.3 |
| 51 | 30 | AMP./Audio Jack | Jan. 14th | NEC | To improve Audio Dolby quality. | Change the C997 & C998 to 2.2U. | 0.3 |
| 52 | 08<br>22<br>33 | CPU Decoupling/FAN(3/3)<br>IDE/CD_ROM Conn.<br>DC TO DC | Jan. 18th | POWER | To save cost for CPU Decoupling Caps.<br>To Save Power consumption for Battery life.<br>To Save Power consumption for Battery life. | Depopulated C29.<br>Change R480 & R481 from 100k to 470k.<br>Change R440 from 100K to 470K | 0.3 |
| 53 | 27 | R5C842-PCI/CARD BUS/OHCI | Jan. 19th | Compal | For Sn-Zn-Bi process. | Change Y5 from SJ124P5M500 to SJ124P5MF00 for Sn-Zn-Bi process. | 0.3 |
| 54 | 23 | USB/BlueTooth/FP | Jan. 20th | Compal | Solve USB leackage voltage problem. | Add Dis-charge circuit R46, R1, Q4 and Q12. | 0.3 |

THIS SHEET OF ENGINEERING DRAWING IS THE PROPRIETARY PROPERTY OF COMPAL ELECTRONICS, INC. AND CONTAINS CONFIDENTIAL AND TRADE SECRET INFORMATION. THIS SHEET MAY NOT BE TRANSFERED FROM THE CUSTODY OF THE COMPETENT DIVISION OF R&D DEPARTMENT EXCEPT AS AUTHORIZED BY COMPAL ELECTRONICS, INC. NEITHER THIS SHEET NOR THE INFORMATION IT CONTAINS MAY BE USED BY OR DISCLOSED TO ANY THIRD PARTY WITHOUT PRIOR WRITTEN CONSENT OF COMPAL ELECTRONICS, INC.

# Version Change List ( P. I. R. List ) Page 3/3

| Item | Page# | Title | Date | Request Owner | Issue Description | Solution Description | Rev. |
|---|---|---|---|---|---|---|---|
| 27 | 23 | USB/BlueTooth/FP | Jan. 21th | Compal | For EMI | Add Common Chock to solve the issue. | 0.3 |
| 28 | 30 | AMP./Audio Jack | Jan. 24th | Vendor | To prevent leakage from +AUD_VREF | Float JP16 pin6. | 0.3 |
| 30 | 12 | RS400MD-PWR/GND(4/4) | Jan. 26th | Compal | improve the +1.2VSA and +1.2VMCOORE be stability. | Add C1020 & C172 to solve +1.2VSA and +1.2VMCORE voltage drop issue. | 0.3 |
| 31 | 08 | CPU Decoupling/FAN(3/3) | Jan. 26th | Compal | To improve Battery Life when S4/S5 status. | Add Q56' SB570020000' and R68' SD028100100,Change Q52 to SB934430000. | 0.3 |
| 32 | 18 | SB400-USB/AC97/MISC.(2/4) | Jan. 26th | ATI | Work around for CKE# Glitch. | Add D21 & D22 with SC1H751H000. | 0.3 |
| 33 | 8 | RS400MD-FSB/A-PCIE(1/4) | Jan. 27th | NEC | Work around for CKE# Glitch. | Change R52 Value to 27K. | 0.3 |
| 34 | 17 | SB400-PCIE/PCI/LPC/RTC(1/4) | Feb. 16th | ATI | To solve SB400-A32 boot fail with PCIE I/F. | Change C263, C264, C265 and C266 from 0.1uf to 0.01uf. | 1.0 |
| 35 | 31 | ENE-KB910L/TPM | Feb. 23th | Compal | To by pass the ACIN to the EC | Add R71 and change D20 & R386 to @. | 0.4 |
| 36 | 17 | SB400-PCIE/PCI/LPC/RTC(1/4) | Feb. 23th | Compal | To improve Battery Life when S4/S5 status. | Change power source of U8.pin14 and R149.1 from +3VALW to +3VS | 0.4 |
| 37 | 21 | Hardware Trap | Feb. 23th | Compal | To improve Battery Life when S4/S5 status. | Change power source of U31F.pin14 and U53.pin5 from +3VALW to +3VS | 0.4 |
| 38 | 31 | ENE-KB910L/TPM | Feb. 23th | Compal | To improve Battery Life when S4/S5 status. | Change power source of R1053 from +3V_EC to +3VS | 0.4 |
| 39 | 32 | BIOS/EE-Prom/TP/KB/SW | Feb. 23th | Compal | To improve Battery Life when S4/S5 status. | Change power source of RP6 from +3V_EC to +3VS | 0.4 |
| 40 | 9 | RS400MD-FSB/A-PCIE(1/4) | Feb. 24th | ATI | To improve LAN performance. | Change LAN port from GPP0 to GPP2 | 0.4 |
| 41 | 18 | SB400-USB/AC97/MISC.(2/4) | Feb. 24th | ATI | To improve LAN performance(For BIOS). | Add pull H & L to U7.A27(GPIO). | 0.4 |
| 42 | 21 | Hardware Trap | Feb. 25th | ATI | Strap on PCICLK5 has beed redefined | Pop R212 to pull low and unpop R199 | 0.4 |
| 43 | 18 | SB400-USB/AC97/MISC.(2/4) | Feb. 25th | NEC | To improve LAN performance(For BIOS). | Add pull H & L to U7.D23(GPIO). | 0.4 |
| 44 | 18 | SB400-USB/AC97/MISC.(2/4) | Mar. 8th | NEC | To improve LAN performance(For BIOS-IRT). | Pop R160 & R167, unpop R159 & R168 | 0.5 |
| 45 | 8 | RS400MD-FSB/A-PCIE(1/4) | Mar. 8th | Compal | Solve Fan noise | Deleted C911 | 0.5 |
| 46 | 21 | Hardware Trap | Mar. 8th | ATI | Strap on PCICLK5 has beed redefined | Pop R199 to pull low and unpop R212 | 0.5 |
| 47 | 12 | RS400MD-PWR/GND(4/4) | Mar. 8th | Compal | For voltage stable | Add C172 | 0.5 |
| 48 | 06 | Pentium-M(1/3) | Apr. 7th | Compal | To solve S3 shut-down issue. | Add Diod D40, RB521S-30, to discharge Base voltage when shut-down. | 2.0 |

THIS SHEET OF ENGINEERING DRAWING IS THE PROPRIETARY PROPERTY OF COMPAL ELECTRONICS, INC. AND CONTAINS CONFIDENTIAL AND TRADE SECRET INFORMATION. THIS SHEET MAY NOT BE TRANSFERED FROM THE CUSTODY OF THE COMPETENT DIVISION OF R&D DEPARTMENT EXCEPT AS AUTHORIZED BY COMPAL ELECTRONICS, INC. NEITHER THIS SHEET NOR THE INFORMATION IT CONTAINS MAY BE USED BY OR DISCLOSED TO ANY THIRD PARTY WITHOUT PRIOR WRITTEN CONSENT OF COMPAL ELECTRONICS, INC.

# Version Change List ( P. I. R. List ) Page 1/3

| Item | Page# | Title | Date | Request Owner | Issue Description | Solution Description | Rev. |
|---|---|---|---|---|---|---|---|
| 1 | 42 | Optional VGA MVCORE Power | Dec. 07th | Compal | In order to use ATI's new power saving feature of Power Play, the VGA chip core Voltage has to to adjusted down to 1.0V. A new power regulator circuit is added using MAX1714 to have high efficiency at light load to make this feature able to prolong battery life. | Add optional PC174, PC176, PC177, PC178, PC179, PC180, PC181, PC184, PD34, PD35, PL15, PL16, PQ47, PQ48, PQ49, PR209, PR210, PR211, PR212, PR213, PR214, PR215, PR216, PR217, PR218, PR219, PU18. Add PC168 , PC169 to replace PC143 (deleted). Add PJP16, PJP17. | 0.2 |
| 2 | 34 | PWR DCIN / Precharge | Dec. 07th | Compal | To prevent adaptor plug in or plug out glitches. | Added PC167 (1000P_0402_50V7K). | 0.2 |
| 3 | 34 | PWR DCIN / Precharge | Dec. 07th | Compal | To adjust adaptor input precharge Voltage and Battery input precharge Voltage thresholds. | Change PR17 to 127K 1%, PR21 to 340K 1%, PC14 to 0.1uF. | 0.2 |
| 4 | 36 | Charger | Dec. 07th | Compal | Change adaptor isolation MOSFET turn-on turn-off delay time for proper multiple power source hot swap. | Change PQ11 to DTC115EUA. Add PD31, PR214, PC170. | 0.2 |
| 5 | 36 | Charger | Dec. 07th | Compal | To prevent power on single time short duration LED flashing by introducing delay in V_BIAS. | Add in PR205, PR206, PR207, PC171, PD36, PQ45, PQ44. | 0.2 |
| 6 | 37 | Battery Select | Dec. 07th | Compal | To provide proper multiple power source hot swap (main and second battery), component values are changed and extra components are added for extra delay to do "Break" before "Make" function. | Added PD33, PD32, PC173, PC172, PQ46, PC208. Change PC44, PC46 to 47pF. Change PR79, PR88 to 100K 5%. | 0.2 |
| 7 | 39 | +1.2VSP & +1.8VALWP | Dec. 07th | Compal | Correct wrong pin connection. | Change PQ28 pin 4 and pin 1,2,3 connection. | 0.2 |
| 8 | 40 | 0.9VSP/VCCPP | Dec. 07th | Compal | Correct wrong pin connection. | Swap PQ42 pin 1 and pin 3 connection. | 0.2 |
| 9 | 41 | CPU_CORE | Dec. 07th | Compal | Correct CPU Vcore load line. | Change PR159 and PR153 from 3K to 2K 1%. | 0.2 |
| 10 | 34 | PWR DCIN / Precharge | Dec. 10th | Compal | Change to horizontal intertion type on-board adaptor connector jack. | Change PJP1 to use "SINGA_2WA-8291T041". | 0.2 |
| 11 | 38 | 3.3V/5V | Dec. 10th | Compal | Change to use lower height Inductor to fit into low height area (5.5A rating is still > 4A requirement). | Change PL8 to use TOKO part: "4.7UH_D104C-919AS-47M_5A_20%". | 0.2 |
| 12 | 35, 36, 37 | CPU OTP Page, Charger Page, and Battery Select Page. | Dec. 13th | Compal | To save power in S4, change PU3, PU5, and PU7 power to be powered from +5VL (not Vs). | Change PU3, PU5, and PU7 pin 8 to VL net. Add PC210 to VL net close to PU5 pin 8. | 0.2 |
| 13 | 42 | Optional VGA MVCORE Power | Dec. 13th | Compal | To change Voltage control pin active polarity on ATI Power Play. | Add PR230, PR231, PQ50, PC200, PD40, and PD41. uninstall PD41. Delete PQ49, PR218, PR219. | 0.2 |
| 14 | 38 | 3.3V/5V | Dec. 14th | Compal | Add option ckt to let +3VALW always on when batteries are in bay. Add option ckt to let +5VALW to be independantly controlled by ECON signal. | Add PR232, PR233, PR234. Uninstall PC148, PR105, pr233, and PU16. | 0.2 |
| 15 | 34 | PWR DCIN / Precharge | Dec. 14th | Compal | Add option ckt to let +3VALW always on when batteries are in bay. | Add PR235. Delete PC8, PR12, PR14, and PQ1. | 0.2 |
| 16 | 34 | PWR DCIN / Precharge | Dec. 14th | Compal | Change pre-charge time to be shorter by use smaller value. | Change PR9, PR11, PR13 to 1K. | 0.2 |
| 17 | 40 | 0.9VSP/VCCPP | Dec. 14th | Compal | With option ckt to let +3VALW always on when batteries are in bay, old circuit components should be uninstalled. | Uninstall PC152, PR201, PQ43, PQ42, PR199, PC149, PC15, PU17, PC150. Add PJP20. Add PR236, but uninstall it. | 0.2 |
| 18 | 39 | +1.2VSP & +1.8VALWP | Dec. 22th | Compal | Add delay circuit requested by HW to form SUSP_DLY# signal for 1.2V and 1.0/1.2V regualtors enable control. | Add PR220, PR222, PC185, PQ50. | 0.2 |
| 19 | 36 | Charger | Dec. 22th | Compal | Add control signal to prevent Voltage droop when adaptor is inserted. Change resistor value to slow down in-rush current. | Add PD43. Change PR43=33K 5%, and unpopulate PR34. | 0.3 |
| 20 | 34 | PWR DCIN / Precharge | Dec. 22th | Compal | Add control signal to prevent Voltage droop problem when adaptor is inserted. | Added PR249=4.7k. Changed PC13=1000pF, PC167 = 0.1uF. | 0.3 |

THIS SHEET OF ENGINEERING DRAWING IS THE PROPRIETARY PROPERTY OF COMPAL ELECTRONICS, INC. AND CONTAINS CONFIDENTIAL AND TRADE SECRET INFORMATION. THIS SHEET MAY NOT BE TRANSFERED FROM THE CUSTODY OF THE COMPETENT DIVISION OF R&D DEPARTMENT EXCEPT AS AUTHORIZED BY COMPAL ELECTRONICS, INC. NEITHER THIS SHEET NOR THE INFORMATION IT CONTAINS MAY BE USED BY OR DISCLOSED TO ANY THIRD PARTY WITHOUT PRIOR WRITTEN CONSENT OF COMPAL ELECTRONICS, INC.

# Version Change List ( P. I. R. List ) Page 2/2

| Item | Page# | Title | Date | Request Owner | Issue Description | Solution Description | Rev. |
|---|---|---|---|---|---|---|---|
| 21 | 34 | PWR DCIN / Precharge | Dec. 30th | Compal | To provide full protection in wrong adaptor over-Voltage or Battery charger over-Voltage conditions, A switch is inserted into Pre-charge path to stop pre-charge during over-Voltage. | Deleted PR10 , and added in PR241, PR242, PR247, PQ57, PQ58, and PQ61. | 0.3 |
| 22 | 36 | Charger | Dec. 30th | Compal | To provide better protection for wrong adaptor over-Voltage, a threshold protection circuit is added on ACOFF# control signal and PQ5 control signal. | Added PQ59, PQ60, PR244, PR245, and PR246. Changed PR36, and PR38. Changed PU5A pin8 to "VIN" net. | 0.3 |
| 23 | 35 | CPU OTP | Dec. 30th | Compal | To improve shutdown mode quiescent current, change CPU OVP circuit resistors to have higher value. | Changed PH1 to 100K (TH11-4H104FT), PR30, 0R28, PR29, PR31, PR25, and PR26 value to larger values to reduce shutdown mode current. Changed PQ4 to RHU002N06 and PC18 to 1000pF. | 0.3 |
| 24 | 39 | +1.2VSP & +1.8VALWP | Dec. 30th | Compal | To correct the polarity of control signal for 1.0V/1.2V regualtor for VGA. | Deleted PR221, PQ51. Changed "SUSP_DLY" connection to PQ50 pin1. | 0.3 |
| 25 | 36 | Charger | Jan. 04th | Compal | To save more power in S3, S4, S5 modes and increase switching speed during power source hot swaping. | Depopulated PR34, PR59, and PR61. Changed PR43, PR70, and PR71 to 2.2K. | 0.3 |
| 26 | 41 | CPU_CORE | Jan. 13th | Compal | Changed back CPU load line resistor value. | Change PR159 and PR153 from 2K to 3K 1%. | 0.3 |
| 27 | 40 | 0.9VSP/VCCPP | Jan. 14th | Compal | De-populate paralleled polymer capacitor on 1.05V rail (H/W has one already). | De-populate PC101. | 0.3 |
| 28 | 42 | Optional VGA MVCORE Power | Jan. 20th | Compal | North Bridge Chip Core Voltage on the lower band change to higher band. | Changed PR217 to 44.2K 1%. | 0.3 |
| 29 | 34 | PWR DCIN / Precharge | Jan. 20th | Compal | To save S4 mode current, Change PU1 pin8 power to VL. | Changed PR22=330K 1%, PR21=169K 1%, PR17=287K 1%, PR16=820K 1%, PR15 to 47K 5%. PU1 pin6 to pin2. PU1 pin8 to VL, Deleted PR24, and PC14. | 0.3 |
| 30 | 39 | +1.2VSP & +1.8VALWP | Jan. 24th | Compal | Add remote sense resistors. | Added PR250, PR251. | 0.3 |
| 31 | 42 | Optional VGA MVCORE Power | Jan. 24th | Compal | Add remote sense resistors. | Added PR252, PR253. | 0.3 |
| 32 | 41 | CPU_CORE | Jan. 24th | Compal | To prevent in-phase operation due to un-predicted noise problems. | Added/reserved PC211, PC212, but not install them. | 0.3 |
| 33 | 38 | 3.3V/5V | Jan. 24th | Compal | To reduce temperature rise on NB skin. | Changed PL5, PL6 to use TOKO inductors. | 0.3 |
| 34 | 34<br>38<br>39<br>41<br>36 | PWR DCIN / Precharge<br>3.3V/5V<br>+1.2VSP & +1.8VALWP<br>CPU_CORE<br>Charger | Jan. 24th | NEC | Add fuse at input trace for each DC/DC circuit and charger ouput trace. | Changed PF1 to 12A and add PF2 for charger output trace, PF3 for 3V/5V, PF4 for 1.2VSP/1.8VALWP/1.2VMVCOREP, PF5forCPU_CORE. | 0.3 |
| 35 | 36 | Charger | Jan. 28th | NEC | Add fuse at batery input trace. | Del PF2 and add PF6 and PF7 at PBJ1 pin 1 and PBJ2 pin 1. | 0.3 |
| 36 | 39<br>42 | +1.2VSP & +1.8VALWP<br>Optional VGA MVCORE Power | Jan. 28th | Compal | System hang up at running 3DMark, chang +1.2VSP and +1.2VMVCOREP to remote sense. | De-populate PR251 and in series with PR250 to +1.2VS .<br>De-populate PR252 and in series with PR253 to +1.2VMVCORE . | 0.3 |
| 37 | 34 | PWR DCIN / Precharge | Fab. 24th | Compal | To reduce power consumption at S4 mode. | Reserve PR256 to as a volatagr divider with PR4. | 0.4 |
| 38 | 38 | 3.3V/5V | Fab. 24th | Compal | To change +3VALWP and +5VALWP sequence, let +3VALWP turns on after +5VALWP. | Add PR255 and PC213 to delay the turn on sequence of +3VALWP. | 0.4 |

THIS SHEET OF ENGINEERING DRAWING IS THE PROPRIETARY PROPERTY OF COMPAL ELECTRONICS, INC. AND CONTAINS CONFIDENTIAL AND TRADE SECRET INFORMATION. THIS SHEET MAY NOT BE TRANSFERED FROM THE CUSTODY OF THE COMPETENT DIVISION OF R&D DEPARTMENT EXCEPT AS AUTHORIZED BY COMPAL ELECTRONICS, INC. NEITHER THIS SHEET NOR THE INFORMATION IT CONTAINS MAY BE USED BY OR DISCLOSED TO ANY THIRD PARTY WITHOUT PRIOR WRITTEN CONSENT OF COMPAL ELECTRONICS, INC.

# Version Change List ( P. I. R. List ) Page 3/3

| Item | Page# | Title | Date | Request Owner | Issue Description | Solution Description | Rev. |
|---|---|---|---|---|---|---|---|
| 39 | 34 | PWR DCIN / Precharge | Mar. 8th | Compal | To change RTC battery charger current to meet RTC battery spec. | Change PR19 and PR20 to 560 Ohm. | 0.4 |
| 40 | 34<br>42 | PWR DCIN / Precharge<br>Optional VGA MVCORE Power | Mar. 8th | Compal | To change 1.2VMVCORE nomial voltage level and add output capacitor to meet spec. | Populate PC169 with 4.7U and change PR217 to 49.9K Ohm. | 0.4 |
| 41 | 35 | PWR CPU OTP | Mar. 8th | Compal | To change OTP triggle point at 86 degree C for thermal team request. | Change PR28 to 200K Ohm. | 0.4 |
| 42 | 36 | PWR-CHARGER | Mar. 8th | Compal | To faster the CP protection. | Change PC26 to 1500PF. | 0.4 |
| 43 | 38 | PWR-+1.2VSP & +1.8VALWP | Mar. 8th | Compal | To decreace +1.2VSP OCP point. | Change PR124 to 61.9K Ohm and PR125 to 39.2K Ohm. | 0.4 |
| 44 | 42 | Optional VGA MVCORE Power | Mar. 8th | Compal | To increace +1.2VMVCORE OCP point. | Change PR126 to 150K Ohm. | 0.4 |
| 45 | 42 | Optional VGA MVCORE Power | Mar. 11th | Compal | To increace +1.2VMVCORE 1.2V and 1.0V switch design margine. | Change PD40 to RB751V and PR231 to 100K Ohm. | 0.4 |
| 46 | 38 | 3.3V/5V | Mar. 16th | Compal | To change +3VALWP and +5VALWP sequence, let +3VALWP turns on after +5VALWP. | Change PR255 to 15K Ohm and PC213 to 0.1u F. | 0.5 |
| 47 | 34<br>38 | PWR DCIN / Precharge<br>3.3V/5V | Mar. 29th | Compal | To solve can't power on when remove the AC outlet without battery | Change PR16 to 1M Ohm , PR21 to 162K Ohm ,PR22 to 287K Ohm , PC13 to 0.1UF , PC12 to 100PF and PD21 to SKUL30-02AT. | 0.5 |
| 48 | 37 | Battery Select | Mar. 29th | Compal | To solve can't power on when discharge battery to shut down mode | Change PR81 to 499K Ohm , PR90 to 499K Ohm and PQ22 to RHU002N06. | 0.5 |
| 49 | 37 | Battery Select | Mar. 29th | Compal | To solve can't charge when discharge battery to shut down mode | Change PR80 to 27K Ohm and PR89 to 27K Ohm. | 0.5 |

THIS SHEET OF ENGINEERING DRAWING IS THE PROPRIETARY PROPERTY OF COMPAL ELECTRONICS, INC. AND CONTAINS CONFIDENTIAL AND TRADE SECRET INFORMATION. THIS SHEET MAY NOT BE TRANSFERED FROM THE CUSTODY OF THE COMPETENT DIVISION OF R&D DEPARTMENT EXCEPT AS AUTHORIZED BY COMPAL ELECTRONICS, INC. NEITHER THIS SHEET NOR THE INFORMATION IT CONTAINS MAY BE USED BY OR DISCLOSED TO ANY THIRD PARTY WITHOUT PRIOR WRITTEN CONSENT OF COMPAL ELECTRONICS, INC.